PAA-CA42NL & PUZ-AK42NL
42,000 BTU/H CASED COIL INDOOR UNIT
42,000 BTU/H HEAT PUMP OUTDOOR UNIT

Job Name:			
System Reference:		**Date:**	

INDOOR Unit ... PAA-CA42NL

OUTDOOR Unit ... PUZ-AK42NL

INDOOR UNIT FEATURES

- Wi-Fi Optional: A Wireless Interface Adapter can be ordered as an accessory for field installation.
- Intelligent Switchover: Intelligent Switchover from electric heat pump to gas furnace operation in extreme cold for consistent comfort. The system can also be set to switch based optimal energy efficiency and to reduce your carbon footprint.
- High Quality Drain Pan: High quality drain pan material with high heat tolerance and low moisture absorption
- Multi-Position Installation: Versatile installation options, including horizontal (left or right) and vertical (up or down) orientations, with included drain pans to facilitate easy setup for any configuration.
- Available Widths: Available in 14.5”, 17.5”, and 21” widths
- Furnace Compatible: "Compatible with most gas furnaces, intelli-HEAT® allows for Intelligent Switchover between the furnace and heat pump operation. * *Mitsubishi Electric air-conditioner and heat pump systems should only be connected with ANSI-Z21.47/CSA2.3 certified furnaces"

OUTDOOR UNIT FEATURES

- Inverter Driven Compressor: Inverter technology uses only the precise amount of energy needed to keep a space comfortable.
- Blue Fin Coating: Anti-corrosion coating that protects the outdoor heat exchanger against salt, sulfur, and other airborne contaminants that impact the efficiency and performance of the outdoor units.
- Seacoast Protection: An anti-corrosion treatment applied to the aluminum fins of the heat exchanger of the outdoor unit to protect against corrosion caused by salt, sulfur, and other airborne contaminants, especially in coastal and industrial areas.
- Low Ambient Cooling: Low ambient cooling down to 0°F providing 100% capacity with front wind baffle kit

© 2026 Mitsubishi Electric Trane HVAC US LLC. All rights reserved.

SPECIFICATIONS: PAA-CA42NL & PUZ-AK42NL

Cooling at 95F[1]	Maximum Capacity	Btu/h	43000
	Rated Capacity	Btu/h	42000
	Minimum Capacity	Btu/h	15400
	Maximum Power Input	W	4200
	Rated Power Input	W	4040
	Moisture Removal	Pints/h	11.10
	Sensible Heat Factor		0.72
	Power Factor [208V / 230V]	%	90 / 90
Heating at 47F[2]	Maximum Capacity	Btu/h	50000
	Rated Capacity	Btu/h	50000
	Minimum Capacity	Btu/h	18900
	Maximum Power Input	W	4730
	Rated Power Input	W	4730
	Power Factor [208V / 230V]	%	91 / 91
Heating at 17F[3]	Maximum Capacity	Btu/h	32600
	Rated Capacity	Btu/h	32600
	Maximum Power Input	W	3670
	Rated Power Input	W	3670
Heating at 5F[5]	Maximum Capacity	Btu/h	26600
	Maximum Power Input	W	3390
Heating at -4F[6]	Maximum Capacity	Btu/h	23900
Efficiency	SEER2		17.10
	EER2[1]		10.30
	HSPF2 [IV]		9.30
	COP at 47°F[2]		3.1
	COP at 17°F at Maximum Capacity[3]		2.60
	COP at 5°F at Maximum Capacity[5]		2.30
	COP at -4°F at Maximum Capacity[6]		2.22
	ENERGY STAR® Certified		No
Electrical	Voltage, Phase, Frequency	V AC / V AC , ø , Hz	208 / 230 , 1 , 60
	Guaranteed Voltage Range	V AC	198 - 253
	Voltage: Indoor - Outdoor, S1-S2	V AC	208/230
	Voltage: Indoor - Outdoor, S2-S3	V DC	12-24
	Short-circuit Current Rating [SCCR]	kA	5
	Recommended Fuse/Breaker Size (Outdoor)	A	35
	Recommended Wire Size [Indoor - Outdoor]	AWG	14
Indoor Unit	MCA	A	0.2
	MOCP	A	15
	Rated Airflow, Dry	CFM	1225
	Maximum Airflow, Dry	CFM	1660
	Minimum Airflow, Dry	CFM	936
	Internal Static Pressure [at Rated CFM]	in.WG	0.3
	Drain Pipe Size O.D.	inch [mm]	3/4 [19.05]
	Unit Dimensions (W x D x H)	inch x inch x inch [mm x mm x mm]	21-1/8 x 21-7/16 x 32 [535 x 543 x 812]
	Package Dimensions (W x D x H)	inch x inch x inch [mm x mm x mm]	22-14/16 x 25-5/16 x 37-8/16 [580 x 695 x 953]
	Unit Weight [Cased Coil Only]	lbs [kg]	80.5 [36.5]
	Control Box Weight	lbs [kg]	5.1 [2.3]
	Package Weight	lbs [kg]	106.9 [48.5]
IDU Operating Temp. Range	Cooling Intake Air Temp [Maximum / Minimum]	°FDB , °FWB / °FDB , °FWB	90 , 73 / 66 , 59
	Heating Intake Air Temp [Maximum / Minimum]	°FDB	83 / 50
Outdoor Unit	MCA	A	34
	MOCP	A	56
	Fan Motor Output	W	74+74
	Airflow Rate Cooling	CFM	3910
	Airflow Rate Heating	CFM	3910

Notes

[1]Cooling at 95°F (Indoor // Outdoor) °F 80 DB, 67 WB // 95 DB, 75 WB
[2]Heating at 47°F (Indoor // Outdoor) °F 70 DB, 60 WB // 47 DB, 43 WB
[3]Heating at 17°F (Indoor // Outdoor) °F 70 DB, 60 WB // 17 DB, 15 WB
[5]Heating at 5°F (Indoor // Outdoor) °F 70 DB, 60 WB // 5 DB, 4 WB
[*]Indoor/Outdoor Unit Operating Temperature Range (Cooling Air Temp [Maximum / Minimum]): • Wind baffles required to operate below 23°F DB in cooling mode. • Heat pump system with wind baffle: 0°F - 115°F. • Refer to wind baffle documentation for further information.
[**]Outdoor Unit Operating Temperature Range (Cooling Thermal Lock-out / Re-start Temperatures; Heating Thermal Lock-out / Re-start Temperatures): • System cuts out in heating mode and automatically restarts at these temperatures.
[6]Heating at -4°F (Indoor // Outdoor) °F 70 DB, 60 WB // -4 DB, -5 WB

© 2026 Mitsubishi Electric Trane HVAC US LLC. All rights reserved.

Outdoor Unit	Defrost Method		Reverse Cycle
	Coating on Heat Exchanger (Bluefin, Sea Coast)		Yes , Yes
	Sound Pressure Level, Cooling[1]	dB (A)	52
	Sound Pressure Level, Heating[2]	dB (A)	53
	Compressor Type		Twin Rotary
	Compressor Model		MRB36FEGMC
	Compressor Oil [Type // Charge]	// oz	RM68EH // 45
	External Finish Color		Munsell No.3Y 7.8/1.1
	Base Pan Heater		Optional
	Unit Dimensions (W x D x H)	inch x inch x inch [mm x mm x mm]	41-11/32 x 14 x 52-43/64 [1050 x 355 x 1338]
	Package Dimensions (W x D x H)	inch x inch x inch [mm x mm x mm]	42-15/16 x 17-3/4 x 58-5/16 [1090 x 450 x 1480]
	Unit Weight	lbs [kg]	224 [102]
	Package Weight	lbs [kg]	251 [114]
ODU Operating Temp. Range	Cooling Intake Air Temp [Maximum / Minimum*]	°FDB	115 / 23
	Heating Intake Air Temp [Maximum / Minimum]	°FDB , °FWB / °FDB , °FWB	70 , 59 / -4 , -4
	Heating Thermal Lock-out / Re-start Temperatures**	°FDB	-13 / -4
Refrigerant	Type		R454B
	Pre-Charged Refrigerant Amount	lbs , oz	9 , 14
	Maximum Pre-Charged Piping Length	ft [m]	100 [30]
	Additional Refrigerant Charge Per Additional Piping Length	oz/ft	0.6
Piping	Gas Pipe Size O.D. [Flared]	inch [mm]	5/8 [15.88]
	Liquid Pipe Size O.D. [Flared]	inch [mm]	3/8 [9.52]
	Maximum Piping Length	ft [m]	100 [30]
	Maximum Height Difference	ft [m]	100 [30]
	Maximum Number of Bends		15

Notes

[1]Cooling at 95°F (Indoor // Outdoor) °F 80 DB, 67 WB // 95 DB, 75 WB
[2]Heating at 47°F (Indoor // Outdoor) °F 70 DB, 60 WB // 47 DB, 43 WB
[3]Heating at 17°F (Indoor // Outdoor) °F 70 DB, 60 WB // 17 DB, 15 WB
[5]Heating at 5°F (Indoor // Outdoor) °F 70 DB, 60 WB // 5 DB, 4 WB
[*]Indoor/Outdoor Unit Operating Temperature Range (Cooling Air Temp [Maximum / Minimum]): • Wind baffles required to operate below 23°F DB in cooling mode. • Heat pump system with wind baffle: 0°F - 115°F. • Refer to wind baffle documentation for further information.
[**]Outdoor Unit Operating Temperature Range (Cooling Thermal Lock-out / Re-start Temperatures; Heating Thermal Lock-out / Re-start Temperatures): • System cuts out in heating mode and automatically restarts at these temperatures.
[6]Heating at -4°F (Indoor // Outdoor) °F 70 DB, 60 WB // -4 DB, -5 WB

© 2026 Mitsubishi Electric Trane HVAC US LLC. All rights reserved.

INDOOR UNIT ACCESSORIES: PAA-CA42NL

Condensate	Sauermann Condensate Pump	SI30-230
	Refco Condensate Pump 100-240 VAC up to 120000 BTUH	COMBI
	Blue Diamond Sensor Extension Cable 15 Ft	C13-103
	Blue Diamond Advanced Mini Condensate Pump w Reservoir Sensor 208230V recommended	X88-721
	Blue Diamond MaxiBlue Advanced Mini Condensate Pump w Reservoir Sensor 110V up to 48000 BTUH recommended	X87-711
	Blue Diamond MegaBlue Advanced Condensate Pump w Reservoir Sensor	X87-835
Control Interface	Wireless Interface Adapter for the Comfort app	PAC-USWHS002-WF-2
	Operation and Error Status Output Adapter ¹	PAC-SF40RM-E
	kumo station for the Comfort app	PAC-WHS01HC-E
	Thermostat Interface	PAC-US446CN-1
	Procon BACnet and Modbus Interface	PAC-UKPRC001-CN-1
	IT Extender for kumo station	PAC-WHS01IE-E
Disconnect Switch	30A600VUL fits 2 X 4 utility box - White	TAZ-MS303W
	30A600VUL fits 2 X 4 utility box - Black	TAZ-MS303
Lineset	3/8 x 5/8 Lineset Twin-Tube Insulation - 15 feet	MPLS385812T-15
	3/8 x 5/8 Lineset Twin-Tube Insulation - 10 feet	MPLS385812T-10
	3/8 x 5/8 Lineset Twin-Tube Insulation - 50 feet	MPLS385812T-50
	3/8 x 5/8 Lineset Twin-Tube Insulation - 100 feet	MPLS385812T-100
	3/8 x 5/8 Lineset Twin-Tube Insulation - 30 feet	MPLS385812T-30
	3/8 x 5/8 Lineset Twin-Tube Insulation - 65 feet	MPLS385812T-65
Remote Sensor	Wall Mount Remote Temperature Sensor	PAC-SE41TS-E
	Flush Mount Remote Temperature Sensor for SEZ SLZ SVZ and all P-Series models	PAC-USSEN002-FM-1
	Wireless temperature and humidity sensor for the Comfort app	PAC-USWHS003-TH-1
Terminal Signal Adapter	5-Pin Wiring Harness	PAC-725AD
	ERV On/Off Input Adapter for CNER on SVZ PEAD and PVA models	PAC-740
	3-Pin Wiring Harness	PAC-715AD
	Backup Heat Relay Kit Adapter for CN24 or CN152 Connector	CN24RELAY-KIT-CM3
Wired Remote Controller	Simple MA Remote Controller	PAC-YT53CRAU-J
	Deluxe Wired MA Remote Controller	PAR-42MAAUB
	Touch MA Wired Remote Controller	PAR-CT01MAU-SB
	Simple Direct Wired Remote Controller	PAC-SDW01RC-1
Wireless Remote Controller	Universal Wireless Receiver for PAR-FL32MA-E	PAR-FA32MA-E
	RedLINK Wireless Remote Controller	MHK2
	Universal Wireless Receiver for PAR-FL32MA-E	PAR-FA32MA-W
	Lockdown Bracket for Wireless Handheld Remote Controllers	RCMKP1CB
	Wireless Remote Contoller	PAR-SL101A-E

Notes

[1]Unable to use with Wireless Handheld Remote Controller
[1]Requires MAC-334IF-E Interface to connect MA controller

© 2026 Mitsubishi Electric Trane HVAC US LLC. All rights reserved.

OUTDOOR UNIT ACCESSORIES: PUZ-AK42NL

Air Outlet Guide	Air Outlet Guide 1 Piece	☐ PAC-SH96SG-E (two pieces required)
Centralized Drain Pan	Centralized Drain Pan	☐ PAC-SH97DP-E
Control/Service Tool	M- & P-Series Maintenance Tool Cable Set	☐ M21EC0397
	ControlService Tool	☐ PAC-SK52ST
	Maintenance Tool Interface	☐ PAC-USCMS-MN-1
Drain Socket	Drain Socket	☐ PAC-SG61DS-E
Hail Guards	Hail Guard	☐ HG-A2
M-NET Converter	M-Net Interface for P-Series	☐ PAC-SJ95MA-E
Mini-Split Wire	14 Gauge 4 wire Armored MiniSplit Cable250 ft roll	☐ SW144-250
	14 Gauge 4 wire Armored MiniSplit Cable50 ft roll	☐ SW144-50
	14 Gauge 4 wire MiniSplit Cable50 ft roll	☐ S144-50
	14 Gauge 4 wire MiniSplit Cable250 ft roll	☐ S144-250
Mounting Pad	Condensing Unit Mounting Pad 24 x 42 x 3	☐ ULTRILITE2
Optional Defrost Heater	Optional Defrost Heater	☐ PAC-SL11BH-E
Snow/Rain Diverter	SnowRain Diverter	☐ SRD-5
Stand	18 Dual Fan Stand	☐ QSMS1802M
	24 Dual Fan Stand	☐ QSMS2402M
	Outdoor Unit Stand 12 High	☐ QSMS1202M
	Outdoor Unit 3-14 inch Mounting Base Pair - Plastic	☐ DSD-400P
Terminal Signal Adapter	5-Pin Wiring Harness	☐ PAC-725AD
	3-Pin Wiring Harness	☐ PAC-715AD
Wind Baffle	Front Wind Baffle	☐ WB-PA3 (two pieces required)
	Rear Wind Baffle	☐ WB-RE6
	Side Advanced Wind Baffle	☐ WB-SD6
Notes		

© 2026 Mitsubishi Electric Trane HVAC US LLC. All rights reserved.

INDOOR UNIT DIMENSIONS: PAA-CA42NL

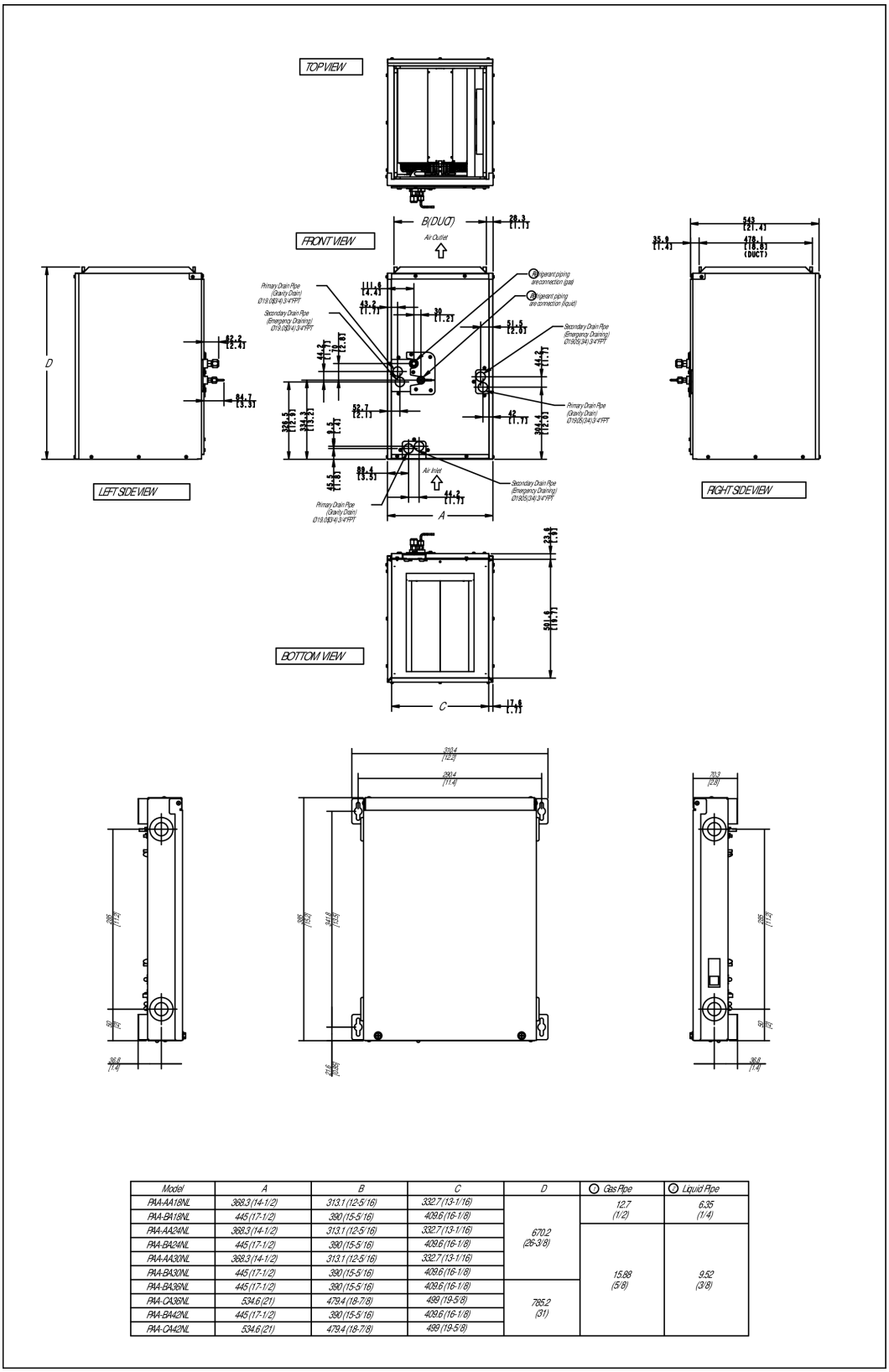

Model	A	B	C	D	Ⓐ Gas Pipe	Ⓑ Liquid Pipe
PAA-AA18NL	368.3 (14-1/2)	313.1 (12-5/16)	332.7 (13-1/16)	670.2 (26-3/8)	12.7 (1/2)	6.35 (1/4)
PAA-BA18NL	445 (17-1/2)	390 (15-5/16)	409.6 (16-1/8)			
PAA-AA24NL	368.3 (14-1/2)	313.1 (12-5/16)	332.7 (13-1/16)		15.88 (5/8)	9.52 (3/8)
PAA-BA24NL	445 (17-1/2)	390 (15-5/16)	409.6 (16-1/8)			
PAA-AA30NL	368.3 (14-1/2)	313.1 (12-5/16)	332.7 (13-1/16)			
PAA-BA30NL	445 (17-1/2)	390 (15-5/16)	409.6 (16-1/8)			
PAA-BA36NL	445 (17-1/2)	390 (15-5/16)	409.6 (16-1/8)	785.2 (31)		
PAA-CA36NL	534.6 (21)	479.4 (18-7/8)	499 (19-5/8)			
PAA-BA42NL	445 (17-1/2)	390 (15-5/16)	409.6 (16-1/8)			
PAA-CA42NL	534.6 (21)	479.4 (18-7/8)	499 (19-5/8)			

© 2026 Mitsubishi Electric Trane HVAC US LLC. All rights reserved.

OUTDOOR UNIT DIMENSIONS: PUZ-AK42NL

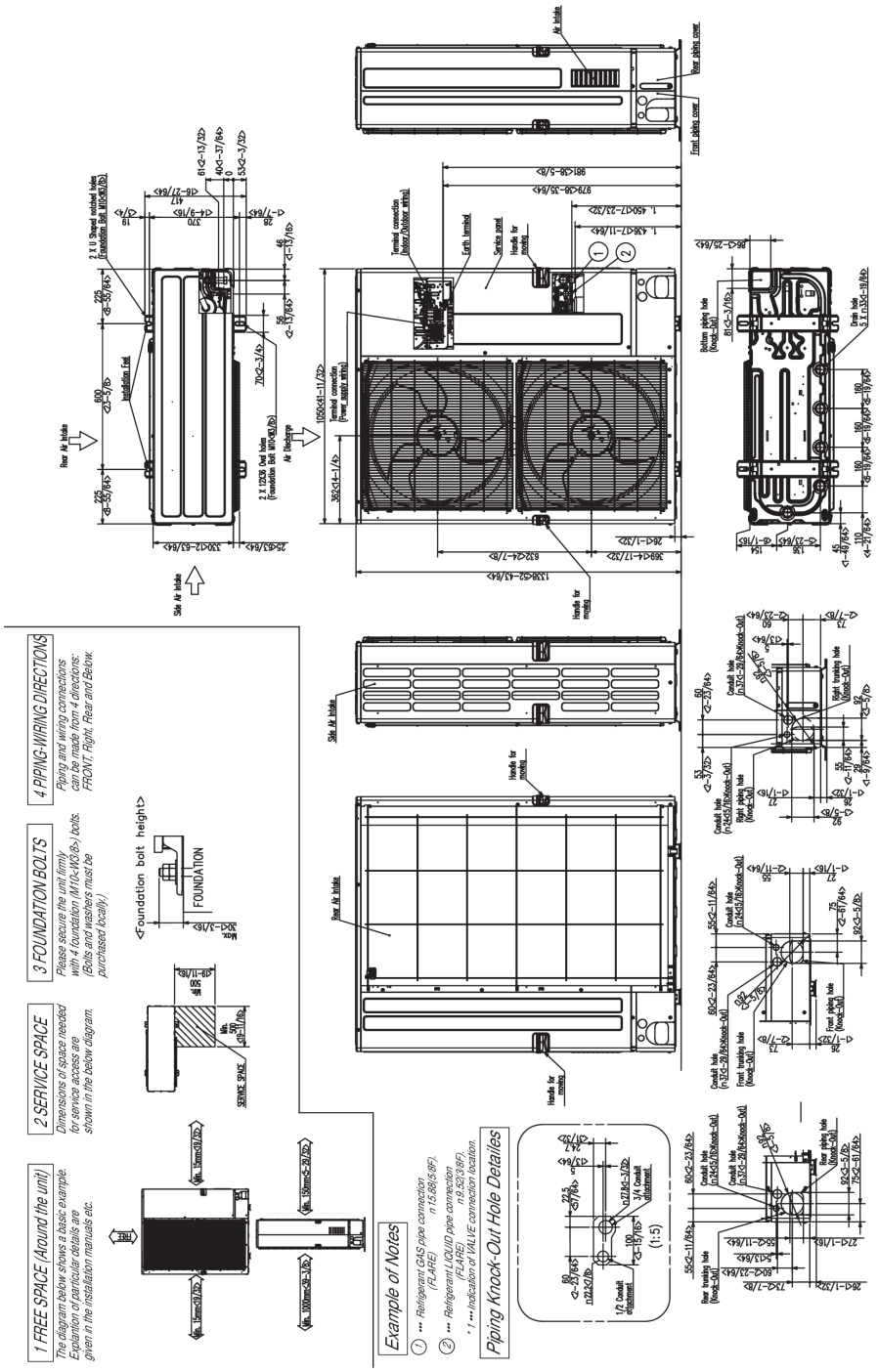

1340 Satellite Boulevard Suwanee, GA 30024
Toll Free: 800-433-4822 · mitsubishicomfort.com

METUS_2026-07_PROPIN

Specifications are subject to change without notice.
© 2026 Mitsubishi Electric Trane HVAC US LLC. All rights reserved.