PAA-AA18NL & PUZ-AH24NL
18,000 BTU/H CASED COIL INDOOR UNIT
18,000 BTU/H HEAT PUMP OUTDOOR UNIT

Job Name:

System Reference: Date:

INDOOR Unit.....PAA-AA18NL

OUTDOOR Unit.....PUZ-AH24NL

INDOOR UNIT FEATURES

- Auto Changeover: The unit will automatically switch between heating and cooling modes to maintain your desired temperature.
- Furnace Compatible: Compatible with most gas furnaces, intelli-HEAT® allows for Intelligent Switchover between the furnace and heat pump operation.
- Intelligent Switchover: Automatically switches from electric heat pump to gas furnace operation in extreme cold for consistent comfort. The system can also be set to switch based optimal energy efficiency and to reduce your carbon footprint.
- Light Commercial: Light commercial applications include small offices, restaurants, and retail.
- Multi Zone: A multi-zone unit provides personalized comfort control to multiple spaces.
- One Speed Fan: Singular fan speed settings for optimal comfort

OUTDOOR UNIT FEATURES

- Blue Fin Coating: Anti-corrosion coating that protects the outdoor heat exchanger against salt, sulfur, and other airborne contaminants that impact the efficiency and performance of the outdoor units.
- Inverter Driven Compressor: Inverter technology uses only the precise amount of energy needed to keep a space comfortable.
- Seacoast Protection: Designed to protect against the corrosive effects of environments that are in close proximity to the sea.

Specifications are subject to change without notice.

© 2025 Mitsubishi Electric Trane HVAC US LLC. All rights reserved.

SPECIFICATIONS: PAA-AA18NL & PUZ-AH24NL

Cooling at 95F[1]	Maximum Capacity	Btu/h	18,500
	Rated Capacity	Btu/h	18,000
	Minimum Capacity	Btu/h	9,500
	Maximum Power Input	W	1,450
	Rated Power Input	W	1,400
	Moisture Removal	Pints/h	5.10
	Sensible Heat Factor	-	0.71
	Power Factor [208V / 230V]	% / %	86 / 86
Heating at 47F[2]	Maximum Capacity	Btu/h	30,100
	Rated Capacity	Btu/h	22,600
	Minimum Capacity	Btu/h	11,400
	Maximum Power Input	W	2,920
	Rated Power Input	W	1,950
	Power Factor [208V / 230V]	% / %	90 / 90
Heating at 17F[3]	Maximum Capacity	Btu/h	10,200
	Rated Capacity	Btu/h	10,200
	Maximum Power Input	W	1,200
	Rated Power Input	W	1,200
Heating at 5F[5]	Maximum Capacity	Btu/h	13,300
	Maximum Power Input	W	1,860
Heating at -4F[6]	Maximum Capacity	Btu/h	8,700
Efficiency	SEER2		17.9
	EER2[1]		12.80
	HSPF2 [IV]		8.80
	COP at 47°F[2]		3.4
	COP at 17°F at Maximum Capacity[3]		2.50
	COP at 5°F at Maximum Capacity[5]		2.10
	COP at -4°F at Maximum Capacity[6]		1.96
	ENERGY STAR® Certified		Yes
Electrical	Voltage, Phase, Frequency	V AC / V AC , ø , Hz	208 / 230 , 1 , 60
	Guaranteed Voltage Range	V AC - V AC	198 - 253
	Voltage: Indoor - Outdoor, S1-S2	V AC	208/230
	Voltage: Indoor - Outdoor, S2-S3	V DC	12-24
	Short-circuit Current Rating [SCCR]	kA	5
	Recommended Fuse/Breaker Size (Outdoor)	A	25
	Recommended Wire Size [Indoor - Outdoor]	AWG	14
Indoor Unit	MCA	A	0.2
	Rated Airflow, Dry	CFM	525
	Maximum Airflow, Dry	CFM	812
	Minimum Airflow, Dry	CFM	424
	Internal Static Pressure [at Rated CFM]	in.WG	0.1
	Drain Pipe Size O.D.	inch [mm]	3/4 [19.05]
	Unit Dimensions (W x D x H)	inch x inch x inch [mm x mm x mm]	14-1/2 x 21-7/16 x 27-1/2 [368 x 543 x 697]
	Package Dimensions (W x D x H)	inch x inch x inch [mm x mm x mm]	17-7/16 x 25-5/16 x 33 [443 x 695 x 838]
	Unit Weight [Cased Coil Only]	lbs [kg]	49.6 [22.5]
	Control Box Weight	lbs [kg]	5.1 [2.3]
	Package Weight	lbs [kg]	71.7 [32.5]
IDU Operating Temp. Range	Cooling Intake Air Temp [Maximum / Minimum]	°FDB , °FWB / °FDB , °FWB	90 , 73 / 66 , 59
	Heating Intake Air Temp [Maximum / Minimum]	°FDB / °FDB	83 / 50

NOTES
[1]Cooling at 95°F (Indoor: 80°F DB, 67°F WB // Outdoor: 95°F DB, 75°F WB)
[2]Heating at 47°F (Indoor: 70°F DB, 60°F WB // Outdoor: 47°F DB, 43°F WB)
[3]Heating at 17°F (Indoor: 70°F DB, 60°F WB // Outdoor: 17°F DB, 15°F WB)
[5]Heating at 5°F (Indoor: 70°F DB, 60°F WB // Outdoor: 5°F DB, 4°F WB)
[6]Heating at -4°F (Indoor: 70°F DB, 60°F WB // Outdoor: -4°F DB, -5°F WB)
*Indoor/Outdoor Unit Operating Temperature Range (Cooling Air Temp [Maximum / Minimum]):
• Wind baffles required to operate below 23°F DB in cooling mode.
• Heat pump system with wind baffle: 0°F - 115°F.
• Refer to wind baffle documentation for further information.
** Outdoor Unit Operating Temperature Range (Cooling Thermal Lock-out / Re-start Temperatures; Heating Thermal Lock-out / Re-start Temperatures):
• System cuts out in heating mode and automatically restarts at these temperatures.

Specifications are subject to change without notice.

© 2025 Mitsubishi Electric Trane HVAC US LLC. All rights reserved.

SPECIFICATIONS: PAA-AA18NL & PUZ-AH24NL

Outdoor Unit	MCA	A	22
	MOCP	A	37
	Fan Motor Output	W	74
	Airflow Rate Cooling	CFM	1,940
	Airflow Rate Heating	CFM	1,940
	Defrost Method		Reverse Cycle
	Coating on Heat Exchanger (Bluefin, Sea Coast)		Yes , Yes
	Sound Pressure Level, Cooling[1]	dB (A)	49
	Sound Pressure Level, Heating[2]	dB (A)	52
	Compressor Type		Twin Rotary
	Compressor Model		SRB172FQHMC-L1
	Compressor Oil [Type // Charge]	Type // oz	RM68EH // 23
	External Finish Color		Munsell No.3Y 7.8/1.1
	Base Pan Heater		Optional
	Unit Dimensions (W x D x H)	inch x inch x inch [mm x mm x mm]	37-13/32 x 14 x 37-1/8 [950 x 355 x 943]
	Package Dimensions (W x D x H)	inch x inch x inch [mm x mm x mm]	41-15/16 x 17-3/4 x 42-1/2 [1,065 x 450 x 1,079]
	Unit Weight	lbs [kg]	155 [70]
	Package Weight	lbs [kg]	179 [81]
ODU Operating Temp. Range	Cooling Intake Air Temp [Maximum / Minimum*]	°FDB / °FDB	115 / 23
	Heating Intake Air Temp [Maximum / Minimum]	°FDB , °FWB / °FDB , °FWB	70 , 59 / -4 , -4
	Heating Thermal Lock-out / Re-start Temperatures**	°FDB / °FDB	-13 / -4
Refrigerant	Type		R454B
	Pre-Charged Refrigerant Amount	lbs , oz	7 , 11
	Maximum Pre-Charged Piping Length	ft [m]	100 [30]
Piping	Gas Pipe Size O.D. [Flared]	inch [mm]	5/8 [15.88]
	Liquid Pipe Size O.D. [Flared]	inch [mm]	3/8 [9.52]
	Maximum Piping Length	ft [m]	100 [30]
	Maximum Height Difference	ft [m]	100 [30]
	Maximum Number of Bends		15

NOTES
[1]Cooling at 95°F (Indoor: 80°F DB, 67°F WB // Outdoor: 95°F DB, 75°F WB)
[2]Heating at 47°F (Indoor: 70°F DB, 60°F WB // Outdoor: 47°F DB, 43°F WB)
[3]Heating at 17°F (Indoor: 70°F DB, 60°F WB // Outdoor: 17°F DB, 15°F WB)
[5]Heating at 5°F (Indoor: 70°F DB, 60°F WB // Outdoor: 5°F DB, 4°F WB)
[6]Heating at -4°F (Indoor: 70°F DB, 60°F WB // Outdoor: -4°F DB, -5°F WB)
*Indoor/Outdoor Unit Operating Temperature Range (Cooling Air Temp [Maximum / Minimum]):
• Wind baffles required to operate below 23°F DB in cooling mode.
• Heat pump system with wind baffle: 0°F - 115°F.
• Refer to wind baffle documentation for further information.
** Outdoor Unit Operating Temperature Range (Cooling Thermal Lock-out / Re-start Temperatures; Heating Thermal Lock-out / Re-start Temperatures):
• System cuts out in heating mode and automatically restarts at these temperatures.

Specifications are subject to change without notice.

© 2025 Mitsubishi Electric Trane HVAC US LLC. All rights reserved.

INDOOR UNIT ACCESSORIES: PAA-AA18NL

Condensate	Blue Diamond Sensor Extension Cable — 15 Ft.	C13-103
	Blue Diamond (MaxiBlue Advanced) Mini Condensate Pump w/ Reservoir & Sensor (110V) up to 48,000 BTU/H [recommended]	X87-711
	Refco Condensate Pump 100-240V up to 120k BTU/h	COMBI
	Sauermann Condensate Pump	SI30-230
	Blue Diamond (MegaBlue Advanced) Condensate Pump w/ Reservoir & Sensor	X87-835
	Blue Diamond (Advanced) Mini Condensate Pump w/ Reservoir & Sensor (208/230V) [recommended]	X87-721
Control Interface	Thermostat Interface	PAC-US446CN-1
	kumo station® for Comfort app	PAC-WHS01HC-E
	Wireless Interface 2 for Comfrot app	PAC-USWHS002-WF-2
	IT Extender	PAC-WHS01IE-E
	Procon BACnet® and Modbus® Interface	PAC-UKPRC001-CN-1
	Operation and Error Status Output Adapter [1]	PAC-SF40RM-E
Disconnect Switch	30A600VUL fits 2 X 4 utility box - Black	TAZ-MS303
	(30A/600V/UL) [fits 2" X 4" utility box] - White	TAZ-MS303W
Lineset	1/4 x 1/2 Lineset Twin-Tube Insulation - 30 feet	MLS141212T-30
	1/4 x 1/2 Lineset Twin-Tube Insulation - 15 feet	MLS141212T-15
	1/4 x 1/2 Lineset Twin-Tube Insulation - 65 feet	MLS141212T-65
	3/8 x 5/8 Lineset Twin-Tube Insulation - 65 feet	MPLS385812T-65
	3/8 x 5/8 Lineset Twin-Tube Insulation - 30 feet	MPLS385812T-30
	3/8 x 5/8 Lineset Twin-Tube Insulation - 50 feet	MPLS385812T-50
	3/8 x 5/8 Lineset Twin-Tube Insulation - 100 feet	MPLS385812T-100
	1/4 x 1/2 Lineset Twin-Tube Insulation - 50 feet	MLS141212T-50
	3/8 x 5/8 Lineset Twin-Tube Insulation - 15 feet	MPLS385812T-15
	3/8 x 5/8 Lineset Twin-Tube Insulation - 10 feet	MPLS385812T-10
	1/4 x 1/2 Lineset Twin-Tube Insulation - 100 feet	MLS141212T-100
Port Adaptor	Adaptor 1/4 x 3/8 (required)	✓ PAC-SJ87RJ-E
	Adaptor 1/2 x 5/8 (required)	✓ PAC-SK89RJ-E
Power Supplies & Auxiliary Components	ERV On/Off Input Adapter for CNER on SVZ PEAD and PVA models	PAC-740
Remote Sensor	Flush Mount Remote Temperature Sensor for SEZ SLZ SVZ and all P-Series models	PAC-USSEN002-FM-1
	Wall Mounted Remote Temperature Sensor	PAC-SE41TS-E
	Wireless temperature and humidity sensor for Comfort app	PAC-USWHS003-TH-1
Terminal Signal Adapter	3-Pin Connector	PAC-715AD
	Connector and wire for Operation status/error using CN51	PAC-725AD
	CN24 Relay Kit	CN24RELAY-KIT-CM3
Wired Remote Controller	Simple MA Remote Controller	PAC-YT53CRAU-J
	Touch MA Controller[1]	PAR-CT01MAU-SB
	Simple Direct Wired Remote Controller	PAC-SDW01RC-1
	Deluxe MA Wired Remote Controller	PAR-42MAAUB
Wireless Remote Controller	Lockdown Bracket for Wireless Handheld Remote Controllers	RCMKP1CB
	Universal Wireless Receiver for PAR-FL32MA-E	PAR-FA32MA-W
	Wireless RedLINK™ Remote Controller	MHK2
	Wireless Remote Contoller	PAR-SL101A-E
	Universal Wireless Receiver for PAR-FL32MA-E	PAR-FA32MA-E

NOTES
[1]Unable to use with Wireless Handheld Remote Controller

© 2025 Mitsubishi Electric Trane HVAC US LLC. All rights reserved.

OUTDOOR UNIT ACCESSORIES: PUZ-AH24NL

Air Outlet Guide	Air Outlet Guide 1 Piece	PAC-SG59SG-E
Centralized Drain Pan	Centralized Drain Pan	PAC-SG64DP-E
Control/Service Tool	M- & P-Series Maintenance Tool Cable Set	M21EC0397
	ControlService Tool	PAC-SK52ST
Drain Socket	Drain Socket	PAC-SG61DS-E
Hail Guards	Hail Guard	HG-A6
M-NET Converter	M-Net Interface for P-Series	PAC-SJ95MA-E
Mini-Split Wire	14 Gauge 4 wire MiniSplit Cable50 ft roll	S144-50
	14 Gauge 4 wire Armored MiniSplit Cable250 ft roll	SW144-250
	14 Gauge 4 wire Armored MiniSplit Cable50 ft roll	SW144-50
	14 Gauge 4 wire MiniSplit Cable250 ft roll	S144-250
Mounting Pad	Condensing Unit Mounting Pad 24 x 42 x 3	ULTRILITE2
Optional Defrost Heater	Optional Defrost Heater	PAC-SK62BH-E
Snow/Rain Diverter	SnowRain Diverter	SRD-4
Stand	Outdoor Unit 3-14 inch Mounting Base Pair - Plastic	DSD-400P
	24 Single Fan Stand	QSMS2401M
	Condenser Wall Bracket - Stainless Steel Finish	QSWBSS
	18 Single Fan Stand	QSMS1801M
	Condenser Wall Bracket	QSWB2000M-1
	Outdoor Unit Stand 12 High	QSMS1201M
Terminal Signal Adapter	Connector and wire for Operation status/error using CN51	PAC-725AD
	3-Pin Connector	PAC-715AD
Wind Baffle	Front Wind Baffle	WB-PA5
	Side Advanced Wind Baffle	WB-SD5
	Rear Wind Baffle	WB-RE5
NOTES		

© 2025 Mitsubishi Electric Trane HVAC US LLC. All rights reserved.

INDOOR UNIT DIMENSIONS: PAA-AA18NL

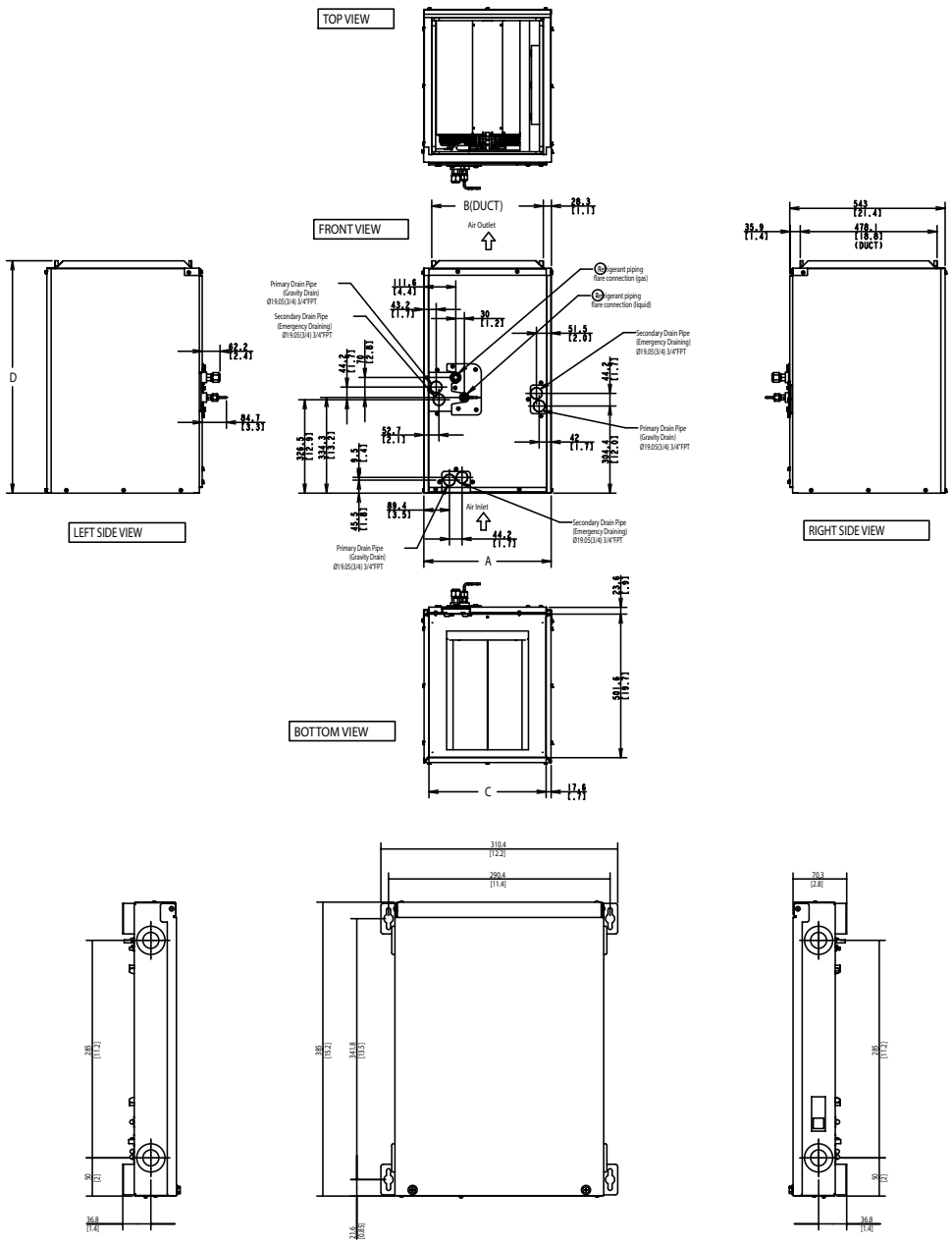

Model	A	B	C	D	① Gas Pipe	② Liquid Pipe
PAA-AA18NL	368.3 (14-1/2)	313.1 (12-5/16)	332.7 (13-1/16)	670.2 (26-3/8)	12.7 (1/2)	6.35 (1/4)
PAA-BA18NL	445 (17-1/2)	390 (15-5/16)	409.6 (16-1/8)			
PAA-AA24NL	368.3 (14-1/2)	313.1 (12-5/16)	332.7 (13-1/16)		15.88 (5/8)	9.52 (3/8)
PAA-BA24NL	445 (17-1/2)	390 (15-5/16)	409.6 (16-1/8)			
PAA-AA30NL	368.3 (14-1/2)	313.1 (12-5/16)	332.7 (13-1/16)			
PAA-BA30NL	445 (17-1/2)	390 (15-5/16)	409.6 (16-1/8)			
PAA-BA36NL	445 (17-1/2)	390 (15-5/16)	409.6 (16-1/8)	785.2 (31)		
PAA-CA36NL	534.6 (21)	479.4 (18-7/8)	499 (19-5/8)			
PAA-BA42NL	445 (17-1/2)	390 (15-5/16)	409.6 (16-1/8)			
PAA-CA42NL	534.6 (21)	479.4 (18-7/8)	499 (19-5/8)			

© 2025 Mitsubishi Electric Trane HVAC US LLC. All rights reserved.

OUTDOOR UNIT DIMENSIONS: PUZ-AH24NL

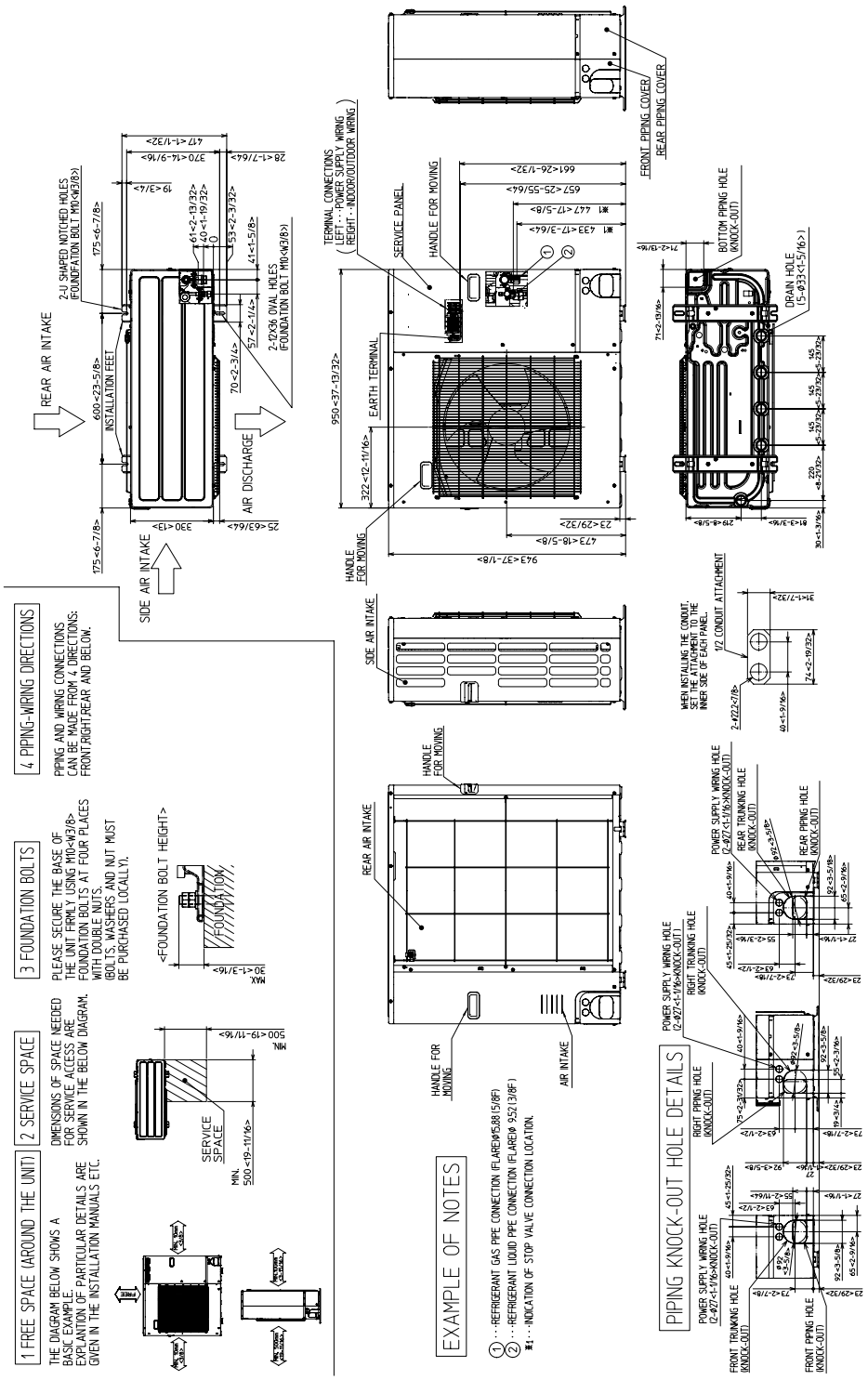

1340 Satellite Boulevard Suwanee, GA 30024
Toll Free: 800-433-4822 https://mitsubishicomfort.com

METUS_2026-01_PROPIN

Specifications are subject to change without notice.

© 2025 Mitsubishi Electric Trane HVAC US LLC. All rights reserved.