MLZ-KX18NL & SUZ-AA18NLHZ
16,400 BTU/H CEILING-MOUNTED INDOOR UNIT
16,400 BTU/H HYPER HEAT PUMP OUTDOOR UNIT

Job Name:			
System Reference:		**Date:**	

INDOOR Unit ... MLZ-KX18NL

OUTDOOR Unit ... SUZ-AA18NLHZ

INDOOR UNIT FEATURES

- Wi-Fi Included: A factory-supplied Wireless Interface Adapter is included with the indoor unit for field installation.
- Dual Barrier Coating: Dual Barrier Coating reduces the collection of contaminants like dust, fibers, smoke, and oil on the inner surface of the indoor unit.
- Smart Set: Smart Set conveniently adjusts to the preferred preset temperature by pressing a single button on the remote control.
- Auto Vane Control: Auto Vane Control directs outlet vanes to move left, right, up, and down. This airflow control provides even temperatures throughout a space.
- Econo Cool: Econo Cool is feature that temporarily adjusts the airflow to maintain comfort while using less energy.

OUTDOOR UNIT FEATURES

- H2i® Hyper-Heating: 100% heating capacity down to 5° F .
- Inverter Driven Compressor: Inverter technology uses only the precise amount of energy needed to keep a space comfortable.
- Blue Fin Coating: Anti-corrosion coating that protects the outdoor heat exchanger against salt, sulfur, and other airborne contaminants that impact the efficiency and performance of the outdoor units.
- Base Pan Heater: This advanced base pan heater helps to prevent interrupted operation due to water freezing after a defrost cycle, ensuring your warmth and comfort during colder weather.
- Seacoast Protection: An anti-corrosion treatment applied to the aluminum fins of the heat exchanger of the outdoor unit to protect against corrosion caused by salt, sulfur, and other airborne contaminants, especially in coastal and industrial areas.

© 2026 Mitsubishi Electric Trane HVAC US LLC. All rights reserved.

SPECIFICATIONS: MLZ-KX18NL & SUZ-AA18NLHZ

Cooling at 95F[1]	Maximum Capacity	Btu/h	16400
	Rated Capacity	Btu/h	16400
	Minimum Capacity	Btu/h	5200
	Maximum Power Input	W	1390
	Rated Power Input	W	1390
	Moisture Removal	Pints/h	4.20
	Sensible Heat Factor		0.71
	Power Factor [208V / 230V]	%	98 / 98
Heating at 47F[2]	Maximum Capacity	Btu/h	21000
	Rated Capacity	Btu/h	18400
	Minimum Capacity	Btu/h	8100
	Maximum Power Input	W	2080
	Rated Power Input	W	1620
	Power Factor [208V / 230V]	%	98 / 98
Heating at 17F[3]	Maximum Capacity	Btu/h	18400
	Rated Capacity	Btu/h	12000
	Maximum Power Input	W	2750
	Rated Power Input	W	1410
Heating at 5F[5]	Maximum Capacity	Btu/h	18400
	Maximum Power Input	W	2696
Heating at -13F[9]	Maximum Capacity	Btu/h	11100
Efficiency	SEER2		17.20
	EER2[1]		11.70
	HSPF2 [IV]		9.50
	COP at 47°F[2]		3.30
	COP at 17°F at Maximum Capacity[3]		1.90
	COP at 5°F at Maximum Capacity[5]		2.00
	COP at -13°F at Maximum Capacity[9]		1.33
	ENERGY STAR® Certified		Yes
Electrical	Voltage, Phase, Frequency	V AC / V AC , ø , Hz	208 / 230 , 1 , 60
	Guaranteed Voltage Range	V AC	198 - 253
	Voltage: Indoor - Outdoor, S1-S2	V AC	208/230
	Voltage: Indoor - Outdoor, S2-S3	V DC	12-24
	Short-circuit Current Rating [SCCR]	kA	5
	Recommended Fuse/Breaker Size (Outdoor)	A	30
	Recommended Wire Size [Indoor - Outdoor]	AWG	14
Indoor Unit	MCA	A	1
	Fan Motor Output	W	30
	Fan Motor Type		DC Motor
	Airflow Rate at Cooling, Dry	CFM	212 , 293 , 346 , 403
	Airflow Rate at Heating, Dry	CFM	212 , 311 , 364 , 417
	Sound Pressure Level [Cooling]	dB (A)	29 , 36 , 41 , 47
	Sound Pressure Level [Heating]	dB (A)	26 , 37 , 42 , 48
	Drain Pipe Size O.D.	inch [mm]	1-1/16 [26]
	Dual Barrier Coating on Fan		Yes
	Unit Dimensions (W x D x H)	inch x inch x inch [mm x mm x mm]	43-3/8 x 14-3/16 x 7-5/16 [1102 x 360 x 185]
	Package Dimensions (W x D x H)	inch x inch x inch [mm x mm x mm]	46-3/8 x 11-3/16 x 15-3/4 [1177 x 284 x 400]
	Unit Weight	lbs [kg]	34 [15.50]
	Package Weight	lbs [kg]	42 [19]
IDU Operating Temp. Range	Cooling Intake Air Temp [Maximum / Minimum]	°FDB , °FWB / °FDB , °FWB	90 , 73 / 66 , 59
	Heating Intake Air Temp [Maximum / Minimum]	°FDB	83 / 50
Outdoor Unit	MCA	A	25
	MOCP	A	42
	Fan Motor Output	W	50
	Airflow Rate Cooling	CFM	2193

Notes

[1]Cooling at 95°F (Indoor // Outdoor) °F 80 DB, 67 WB // 95 DB, 75 WB
[2]Heating at 47°F (Indoor // Outdoor) °F 70 DB, 60 WB // 47 DB, 43 WB
[3]Heating at 17°F (Indoor // Outdoor) °F 70 DB, 60 WB // 17 DB, 15 WB
[5]Heating at 5°F (Indoor // Outdoor) °F 70 DB, 60 WB // 5 DB, 4 WB
[9]Heating at -13°F (Indoor // Outdoor) °F 70 DB, 60 WB // -13 DB, -14 WB
[*]Indoor/Outdoor Unit Operating Temperature Range (Cooling Air Temp [Maximum / Minimum]): • Applications should be restricted to comfort cooling only; equipment cooling applications are not recommended for low ambient temperature conditions.
[**]Outdoor Unit Operating Temperature Range (Cooling Thermal Lock-out / Re-start Temperatures; Heating Thermal Lock-out / Re-start Temperatures): • System cuts out in heating mode and automatically restarts at these temperatures.

© 2026 Mitsubishi Electric Trane HVAC US LLC. All rights reserved.

SPECIFICATIONS: MLZ-KX18NL & SUZ-AA18NLHZ

Outdoor Unit	Airflow Rate Heating	CFM	1949
	Defrost Method		Reverse Cycle
	Coating on Heat Exchanger (Bluefin, Sea Coast)		Yes , Yes
	Sound Pressure Level, Cooling[1]	dB (A)	54
	Sound Pressure Level, Heating[2]	dB (A)	55
	Compressor Type		Twin Rotary
	Compressor Model		SRB172FQHMT
	Compressor Oil [Type // Charge]	// oz	RM68EH // 14.5
	External Finish Color		Munsell No.3Y 7.8/1.1
	Base Pan Heater		Built-in
	Unit Dimensions (W x D x H)	inch x inch x inch [mm x mm x mm]	33-1/16 x 13 x 34-5/8 [840 x 330 x 880]
	Package Dimensions (W x D x H)	inch x inch x inch [mm x mm x mm]	38-5/8 x 16-9/16 x 39 [980 x 420 x 990]
	Unit Weight	lbs [kg]	115 [52.2]
	Package Weight	lbs [kg]	133 [60.3]
ODU Operating Temp. Range	Cooling Intake Air Temp [Maximum / Minimum*]	°FDB	115 / 14
	Cooling Thermal Lock-out / Re-start Temperatures**	°FDB	-1 / 3
	Heating Intake Air Temp [Maximum / Minimum]	°FDB , °FWB / °FDB , °FWB	70 , 65 / -13 , -14
	Heating Thermal Lock-out / Re-start Temperatures**	°FDB	-22.5 / -14
Refrigerant	Type		R454B
	Pre-Charged Refrigerant Amount	lbs	3
	Maximum Pre-Charged Piping Length	ft [m]	25 [7.60]
	Additional Refrigerant Charge Per Additional Piping Length	oz/ft	0.22
Piping	Gas Pipe Size O.D. [Flared]	inch [mm]	1/2 [12.72]
	Liquid Pipe Size O.D. [Flared]	inch [mm]	1/4 [6.35]
	Maximum Piping Length	ft [m]	100 [30]
	Maximum Height Difference	ft [m]	50 [15]
	Maximum Number of Bends		10
		inch [mm]	19-11/16 [500]

Notes

[1]Cooling at 95°F (Indoor // Outdoor) °F 80 DB, 67 WB // 95 DB, 75 WB
[2]Heating at 47°F (Indoor // Outdoor) °F 70 DB, 60 WB // 47 DB, 43 WB
[3]Heating at 17°F (Indoor // Outdoor) °F 70 DB, 60 WB // 17 DB, 15 WB
[5]Heating at 5°F (Indoor // Outdoor) °F 70 DB, 60 WB // 5 DB, 4 WB
[9]Heating at -13°F (Indoor // Outdoor) °F 70 DB, 60 WB // -13 DB, -14 WB
[*]Indoor/Outdoor Unit Operating Temperature Range (Cooling Air Temp [Maximum / Minimum]): • Applications should be restricted to comfort cooling only; equipment cooling applications are not recommended for low ambient temperature conditions.
[**]Outdoor Unit Operating Temperature Range (Cooling Thermal Lock-out / Re-start Temperatures; Heating Thermal Lock-out / Re-start Temperatures): • System cuts out in heating mode and automatically restarts at these temperatures.

© 2026 Mitsubishi Electric Trane HVAC US LLC. All rights reserved.

INDOOR UNIT ACCESSORIES: MLZ-KX18NL

Condensate	Sauermann Condensate Pump	☐	SI30-230
	Blue Diamond Advanced Mini Condensate Pump w Reservoir Sensor 208230V recommended	☐	X88-721
	Refco Condensate Pump 100-240 VAC up to 120000 BTUH	☐	COMBI
	Blue Diamond MicroBlue Mini Condensate Pump 110208230V up to 18000 BTUH	☐	X86-003
	Blue Diamond Sensor Extension Cable 15 Ft	☐	C13-103
	Blue Diamond MaxiBlue Advanced Mini Condensate Pump w Reservoir Sensor 110V up to 48000 BTUH recommended	☐	X87-711
	Blue Diamond MegaBlue Advanced Condensate Pump w Reservoir Sensor	☐	X87-835
Control Interface	Procon BACnet and Modbus Interface	☐	PAC-UKPRC001-CN-1
	Thermostat Interface for 3rd Party Thermostats	☐	PAC-US445CN-1
	Airzone Wireless Lite Controller White	☐	AZZBSLITERB
	IT Extender for kumo station	☐	PAC-WHS01IE-E
	Airzone Wireless Think Controller White	☐	AZZBSTHINKRB
	Airzone Wired Blueface Controller Black	☐	AZZBSBLUEZEROCN
	M-NET adapter ²	☐	MAC-334IF-E
	Airzone Wireless Think Controller Black	☐	AZZBSTHINKRN
	Wireless Interface Adapter for the Comfort app	☐	PAC-USWHS002-WF-2
	Airzone Wired Blueface Controller White	☐	AZZBSBLUEZEROCB
	kumo station for the Comfort app	☐	PAC-WHS01HC-E
	Airzone Wireless Lite Controller Black	☐	AZZBSLITERN
Disconnect Switch	30A600VUL fits 2 X 4 utility box - Black	☐	TAZ-MS303
	30A600VUL fits 2 X 4 utility box - White	☐	TAZ-MS303W
Drain Hose	Flexible Mini-Split Drain Hose	☐	DRX-16
Filter	Microparticle Filter	☐	MAC-EMF515FT-E
	Anti-allergy Enzyme Filter	☐	MAC-408FT-E
Grille	Grille (Decoration panel)	☑	MLP-449WU-U1
Lineset	65 x 1/4 x 65 1/2 Lineset Twin-Tube Insulation	☐	MLS141212T-65
	50 x 1/4 x 50 1/2 Lineset Twin-Tube Insulation	☐	MLS141212T-50
	30 x 1/4 x 30 1/2 Lineset Twin-Tube Insulation	☐	MLS141212T-30
	100 x 1/4 x 100 1/2 Lineset Twin-Tube Insulation	☐	MLS141212T-100
	15 x 1/4 x 15 1/2 Lineset Twin-Tube Insulation	☐	MLS141212T-15
Remote Sensor	Wireless temperature and humidity sensor for the Comfort app	☐	PAC-USWHS003-TH-1
	Remote Temperature Sensor for MFZ MLZ and MSZ models	☐	M21EAA307
Terminal Signal Adapter	Backup Heat Relay Kit Adapter for CN24 or CN152 Connector	☐	CN24RELAY-KIT-CM3
Wired Remote Controller	Deluxe Wired MA Remote Controller ¹	☐	PAR-42MAAUB
	Simple Direct Wired Remote Controller	☐	PAC-SDW01RC-1
	Simple MA Remote Controller ¹	☐	PAC-YT53CRAU-J
	Touch MA Wired Remote Controller ¹	☐	PAR-CT01MAU-SB
Wireless Remote Controller	RedLINK Wireless Remote Controller	☐	MHK2
	Lockdown Bracket for Wireless Handheld Remote Controllers	☐	RCMKP1CB

Notes

[1]Requires MAC-334IF-E Interface to connect MA controller
[2]Allows IDU Connection to MA Controller: *Deluxe MA Remote Controller *Simple MA Controller *Touch MA Controller

© 2026 Mitsubishi Electric Trane HVAC US LLC. All rights reserved.

OUTDOOR UNIT ACCESSORIES: SUZ-AA18NLHZ

Air Outlet Guide	Air Outlet Guide	☐ MAC-890SG-E
Control/Service Tool	Maintenance Tool Interface	☐ PAC-USCMS-MN-1
	M- & P-Series Maintenance Tool Cable Set	☐ M21EC0397
Drain Socket	Drain Socket	☐ MAC-871DS
Hail Guards	Hail Guard	☐ HG-A7
Mini-Split Wire	14 Gauge 4 wire Armored MiniSplit Cable50 ft roll	☐ SW144-50
	14 Gauge 4 wire MiniSplit Cable50 ft roll	☐ S144-50
	14 Gauge 4 wire MiniSplit Cable250 ft roll	☐ S144-250
	14 Gauge 4 wire Armored MiniSplit Cable250 ft roll	☐ SW144-250
Mounting Pad	Condensing Unit Mounting Pad 16 x 36 x 3	☐ ULTRILITE1
Muffler	Muffler	☐ MAC-002MF-E
Snow/Rain Diverter	SnowRain Diverter	☐ SRD-3
Stand	18 Single Fan Stand	☐ QSMS1801M
	Condenser Wall Bracket	☐ QSWB2000M-1
	Outdoor Unit 3-14 inch Mounting Base Pair - Plastic	☐ DSD-400P
	24 Single Fan Stand	☐ QSMS2401M
	Outdoor Unit Stand 12 High	☐ QSMS1201M
	Condenser Wall Bracket - Stainless Steel Finish	☐ QSWBSS
Notes		

© 2026 Mitsubishi Electric Trane HVAC US LLC. All rights reserved.

MLZ-KX09NL - U1
MLZ-KX12NL - U1
MLZ-KX18NL - U1

INDOOR UNIT OUTLINE DRAWING

(TOP VIEW)

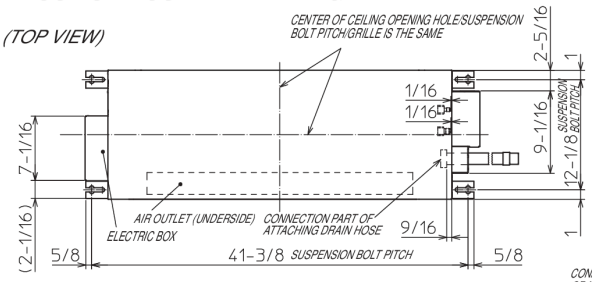

(FRONT VIEW)

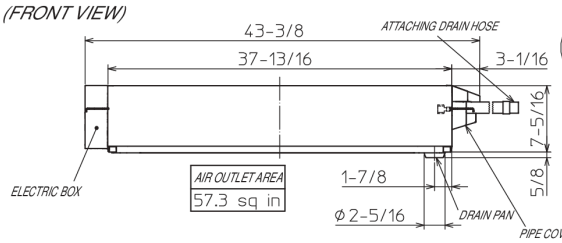

REMOTE CONTROLLER OUTLINE DRAWING

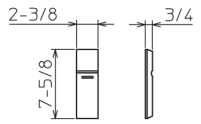

(RIGHT SIDE VIEW)

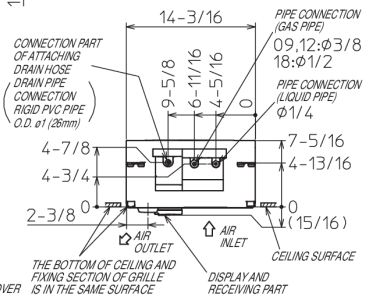

GRILLE OUTLINE DRAWING
(MLP-449WU)

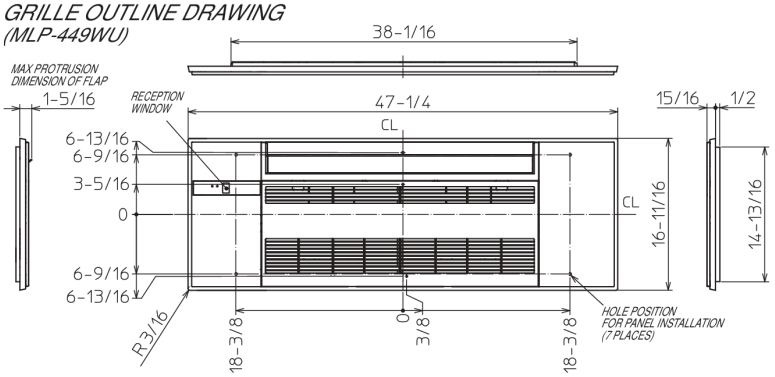

		KX09/12NL	KX18NL
EXTENSION PIPE	LIQUID PIPE O.D.	ø1/4	
	GAS PIPE O.D.	ø3/8	ø1/2
CONNECTIONG OF PIPE	LIQUID PIPE	FLARED CONNECTION ø1/4	
	GAS PIPE	FLARED CONNECTION ø3/8	FLARED CONNECTION ø1/2
DRAIN HOSE		HEAT INSULATER O.D. ø1-1/4 / CONNECTION I.D. ø1	EFFECTIVE LENGTH 18-7/8
DRAIN PIPE CONNECTION		RIGID PVC PIPE O.D. ø1 (26mm)	

NOTE 1. CUT THE DRAIN HOSE (ACCESSORY) FOR USE, IF NECESSARY.

INDOOR UNIT DETAIL VIEW
(TOP VIEW)

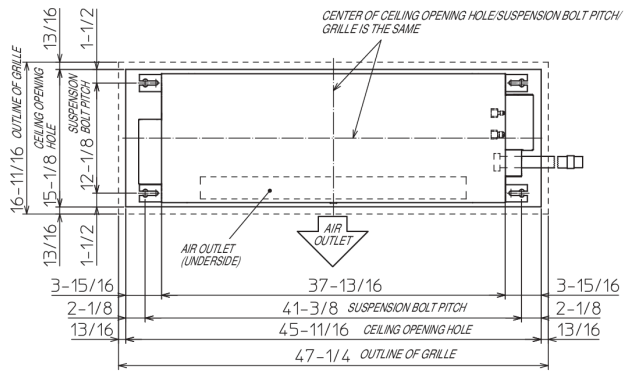

(FRONT VIEW)

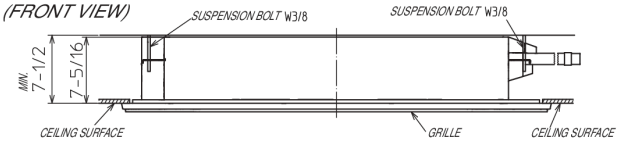

THE METHOD FOR STANDING DRAIN FROM INDOOR UNIT
* CUT THE DRAIN HOSE (ACCESSORY) FOR USE, IF NECESSARY.

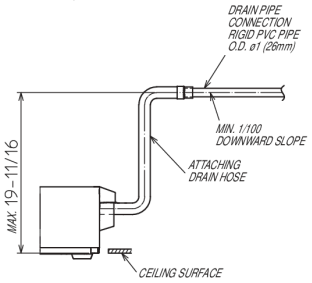

© 2026 Mitsubishi Electric Trane HVAC US LLC. All rights reserved.

OUTDOOR UNIT DIMENSIONS: SUZ-AA18NLHZ

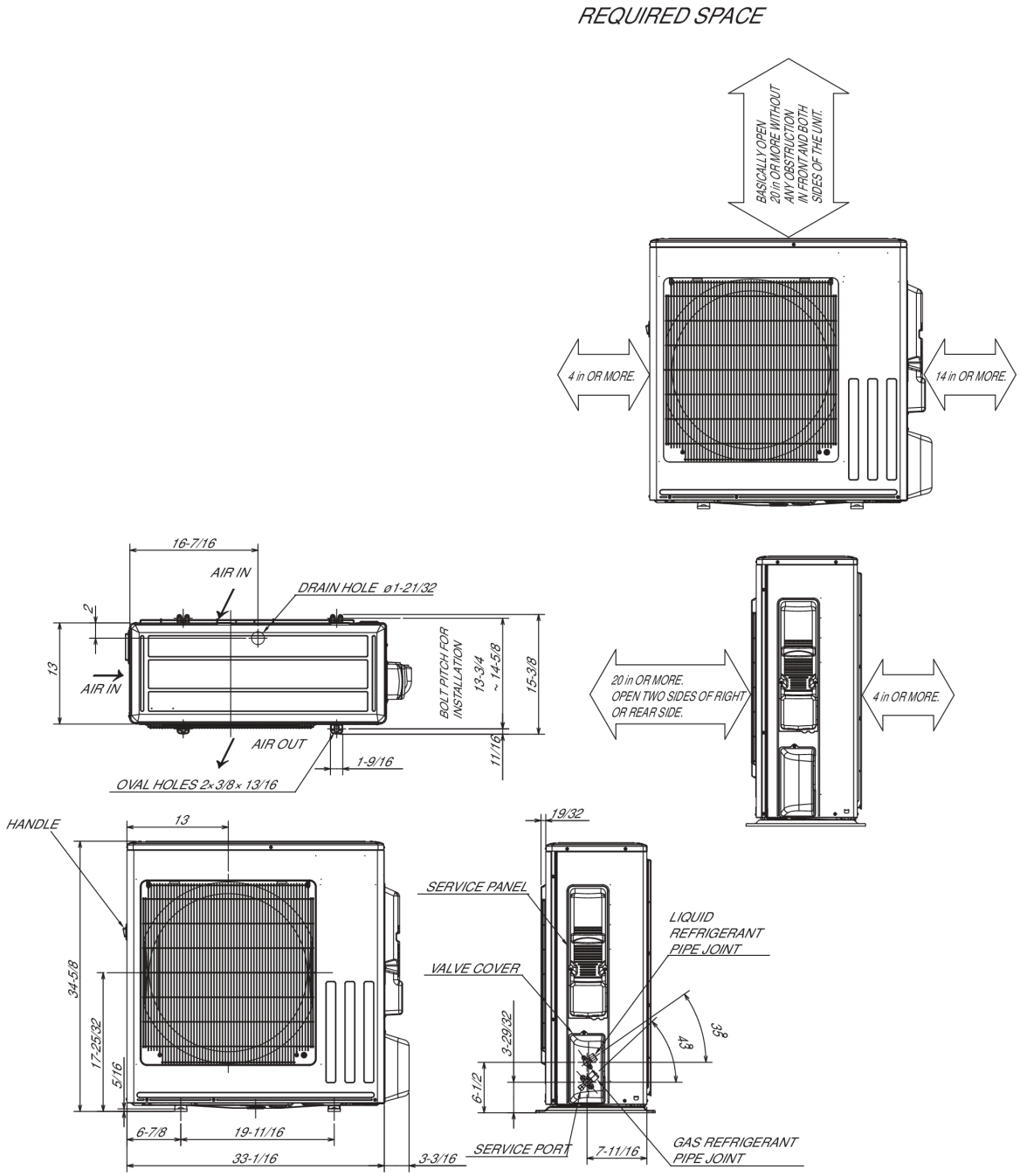

REFRIGERANT PIPE JOINT	LIQUID REFRIGERANT PIPE	FLARED ø6.35 (1/4")
	GAS REFRIGERANT PIPE	AA09/12 : FLARED ø9.52 (3/8") AA15/18 : FLARED ø12.7 (1/2") AA24/30/36 : FLARED ø15.88 (5/8")

1340 Satellite Boulevard Suwanee, GA 30024
Toll Free: 800-433-4822 · mitsubishicomfort.com

METUS_2026-07_PROPIN

Specifications are subject to change without notice.

© 2026 Mitsubishi Electric Trane HVAC US LLC. All rights reserved.