EAHV-M050YCLU-N
50-TON INSIDE HEADER E-CHILLER (USA UL) HEAT PUMP OUTDOOR UNIT

Job Name:			
System Reference:		**Date:**	

GENERAL FEATURES

- Space saving: The system design includes models available with internal piping headers.
- Modular: Up to six 40-ton or 50-ton modules can be grouped together to offer large capacities up to 240 tons or 300 tons.
- Scalable: The number of units and groups can be easily scaled up or down with piping arrangements to meet building requirements.
- Rotation function: When multiple units are installed, the operating time of each module in the same system can be equalized with the factory central controller to maintain equal runtime.
- Built-in redundancy: When multiple modules are used, if one were to fail, the remaining modules will continue to operate. Maintenance can be performed without any full-system downtime.

SPECIFICATIONS			SYSTEM
UNIT TYPE			EAHV-M050YCLU-N
Power Source Summary	Phase / Voltage / Frequency / Tolerance		3-Phase 3-Wire 460V 60Hz, +/- 5%
Cooling Capacity [1]	Cooling capacity [7]	Btu/h [kW]	614,200 [180]
	Power input	kW	58.06
	EER [6]	[kW/kW]	10.58 [3.10]
	IPLV [6]		21.59
	Water Flow Rate	GPM [m3/h]	122.80 [27.89]
Heating Capacity [2]	Heating capacity [7]	Btu/h [kW]	614,200 [180]
	Power input	kW	59.60
	COP	[kW/kW]	10.30 [3.02]
	Water Flow Rate	GPM [m3/h]	122.80 [27.89]
Current Input	Cooling current 460 V [1]	A	81
	Heating current 460 V [2]	A	84
	Maximum current	A	120
Water Pressure Drop [1]	Standard piping	ftAq [psi]{ kPa }	21.80 [9.40]{ 65 }
	Inside header piping	ftAq [psi]{ kPa }	52.20 [22.60]{ 156 }
Temp Range	Cooling - Outlet water	F [C]	39.20~86.00 [4.00~30.00]
	Heating - Outlet water	F [C]	77.00~131.00 [25.00~55.00]
	Cooling - Outdoor	F [C]	5.0~125.6 [-15.0~52.0]
	Heating - Outdoor	F [C]	-4.0~109.4 [-20.0~43.0]
Circulating Water Volume Range	Circulating water volume range	GPM [m3/h]	56.8~189 [12.9~43.0]
Sound Levels	Sound pressure level (measured in anechoic room) at 1m [1, 5]	dB (A)	68
	Sound power level (measured in anechoic room) [1]	dB (A)	89
Diameter of Water Pipe (Standard Piping)	Inlet	inch [mm]	2 1/2B housing type joint [65A housing type joint]
	Outlet	inch [mm]	2 1/2B housing type joint [65A housing type joint]
Diameter of Water Pipe (Inside Header Piping)	Inlet	inches [mm]	6B housing type joint [150A housing type joint]
	Outlet	inches [mm]	6B housing type joint [150A housing type joint]
Outdoor Unit	External finish		Polyester powder coating steel plate
	External finish color		5Y8/1
	Sea Coast Protection		No
	External Dimensions (H x W x D)	inch x inch x inch [mm x mm x mm]	92-17/32 x 133-27/32 x 42-17/32 [2350 x 3400 x 1080]
	Package weight	lbs [kg]	3040 [1379]
	Net weight, Standard Piping	lbs [kg]	2930 [1329]
	Net weight, Inside Header Piping	lbs [kg]	2989 [1356]
Design Pressure	R32	psi [MPa]	602 [4.15]
	Water	psi [MPa]	145 [1]

Notes

[1]Under normal cooling conditions at outdoor temp 95.00°F DB (35.00°C DB) outlet water temp 44.00°F (6.67°C) inlet water temp 54.00°F (12.22°C). Pump input is not included in cooling capacity and power input.
[2]Under normal heating conditions at outdoor temp 47.00°F DB/43.00°F WB (8.33°C DB / 6.11°C WB) outlet water temp 120.00°F (48.89°C). Pump input is not included in heating capacity and power input.
[3]Amount of factory-charged refrigerant is 2.95 (kg) × 4. Please add the refrigerant at the field.
*Please don't use the steel material for the water piping. Please always make water circulate or pull the circulation water out completely when not in use. Please do not use groundwater or well water in direct. The water circuit must be closed circuit.
*Due to continuous improvement, the above specifications may be subject to change without notice.
*This model doesn't equip with a pump
[4]Refer to the following page(s) in the data book for detail. "Operation temperature range" (p. 65)
[5]In anechoic room at 3.28 ft. (1m) from the service surface
[6] Certified by AHRI 550/590
[7]e-Chiller contains compressor protection measures following restart after power loss that can limit compressor speed and full capacity output for up to 90 minutes - consult with Mitsubishi representative before applying this product in mission critical / critical IT environments.

© 2026 Mitsubishi Electric Trane HVAC US LLC. All rights reserved.

OUTDOOR UNIT SPECIFICATIONS: EAHV-M050YCLU-N

Heat Exchanger	Water side		Stainless steel plate and copper brazing
	Air side		Salt-resistant cross fin & aluminium tube
Compressor	Compressor Type		Inverter scroll hermetic compressor
	Compressor Manufacturer		MITSUBISHI ELECTRIC CORPORATION
	Compressor Starting method		Inverter
	Compressor Quantity		4
	Compressor Motor Output	kW	11.5 × 4
	Compressor Operating Range		13-100%
	Compressor Lubricant		MEL46EH
	Compressor Oil Charge	oz [L]	84.535 x 4 [2.5 x 4]
Fan	Air Flow Rate	CFM [m^3/min]{ L /s }	9534 × 4 [270 × 4]{ 4500 × 4 }
	Type, Quantity		Propeller fan 4
	Starting Method		Inverter
	Motor Output	kW	0.92 x 4
	External static pressure	psi [Pa]	0.0029 [20]
Protection Devices	Protection Devices High Pressure Protection		High pressure sensor & High pressure switch at 4.15 MPa (602 psi)
	Protection Devices Inverter Circuit (Comp./Fan)		Over-heat protection, Over current protection
Refrigerant	Type		R32
	Refrigerant Charge [3]	lbs kg	25.4 × 4 11.5 × 4
	Control		LEV
MCA	MCA	A	148
MOP	MOP	A	250
SCCR	SCCR	kA	5

Notes

[1]Under normal cooling conditions at outdoor temp 95.00°F DB (35.00°C DB) outlet water temp 44.00°F (6.67°C) inlet water temp 54.00°F (12.22°C). Pump input is not included in cooling capacity and power input.
[2]Under normal heating conditions at outdoor temp 47.00°F DB/43.00°F WB (8.33°C DB / 6.11°C WB) outlet water temp 120.00°F (48.89°C). Pump input is not included in heating capacity and power input.
[3]Amount of factory-charged refrigerant is 2.95 (kg) × 4. Please add the refrigerant at the field.
[*]Please don't use the steel material for the water piping. Please always make water circulate or pull the circulation water out completely when not in use. Please do not use groundwater or well water in direct. The water circuit must be closed circuit.
[*]Due to continuous improvement, the above specifications may be subject to change without notice.
[*]This model doesn't equip with a pump
[4]Refer to the following page(s) in the data book for detail. "Operation temperature range" (p. 65)
[5]In anechoic room at 3.28 ft. (1m) from the service surface
[6] Certified by AHRI 550/590
[7]e-Chiller contains compressor protection measures following restart after power loss that can limit compressor speed and full capacity output for up to 90 minutes - consult with Mitsubishi representative before applying this product in mission critical / critical IT environments.

© 2026 Mitsubishi Electric Trane HVAC US LLC. All rights reserved.

OUTDOOR UNIT ACCESSORIES: EAHV-M050YCLU-N

Fin Guard	eChiller Fin Guard Kit	☐ EC-130FG
Gasket	Gasket Replacement - e-Chiller Inside Header Coupling	☐ GAS-RG-165-E
Header Kit	eChiller Piping Kit - Inside Hdr Model Only (Between)	☐ EC-02HK
	eChiller Piping Kit - Inside Hdr Model (Ends)	☐ EC-01HK
Remote Sensor	External Water Temperature Sensor	☐ TW-TH16-E
Required JIS to ANSI Couplings	e-Chiller Inside Header Grooved Coupling Reducer**	☑ FWG402R165168
Wired Remote Controller	Wired Remote Controller for eChiller	☐ PAR-W31MAA-J

Notes

** 4 x (Number of Modules - 1) + 2

© 2026 Mitsubishi Electric Trane HVAC US LLC. All rights reserved.

OUTDOOR UNIT DIMENSIONS: EAHV-M050YCLU-N

EAHV-M040, 050YCLU-N(-BS)

Unit: mm (in.)

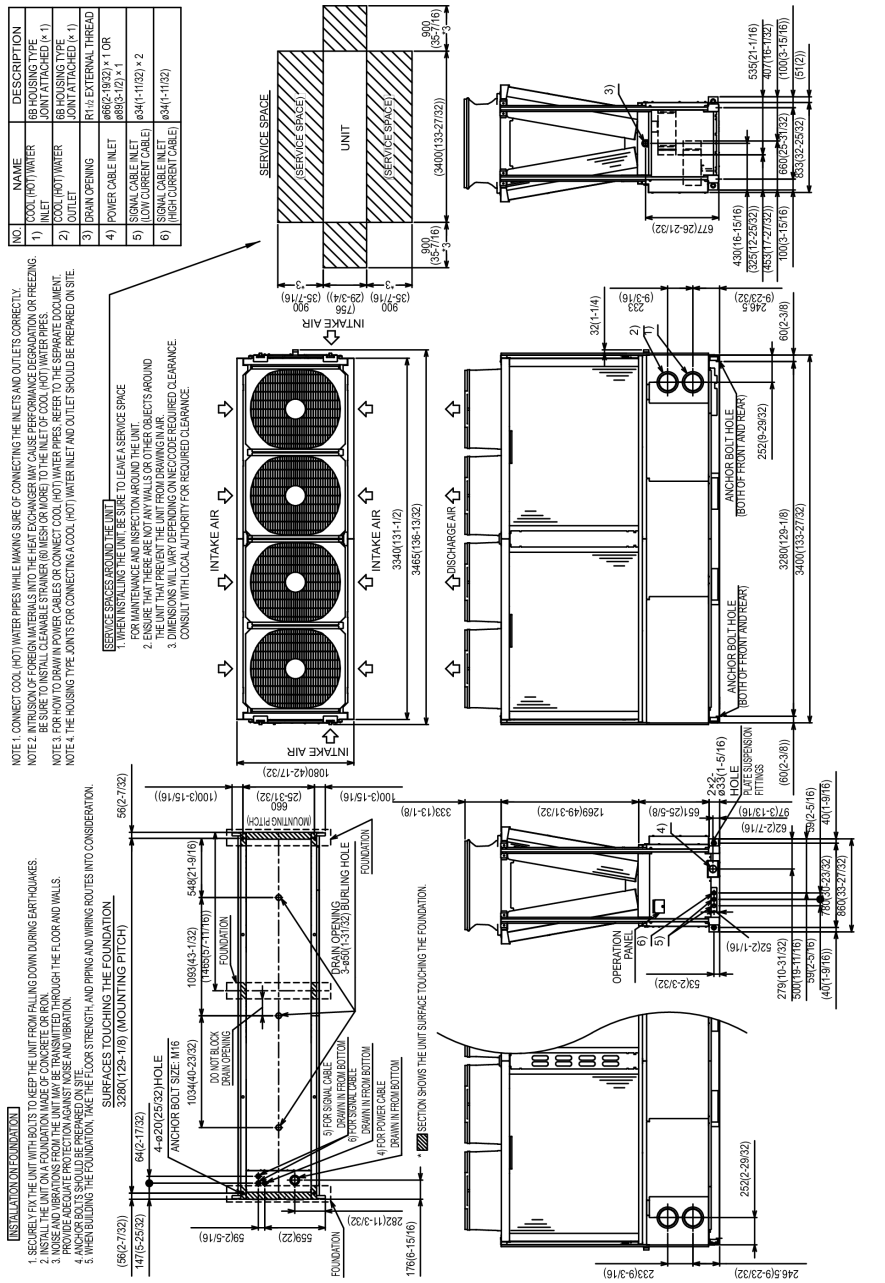

1340 Satellite Boulevard Suwanee, GA 30024
Toll Free: 800-433-4822 · mitsubishicomfort.com

METUS_2026-10_PROPIN

Specifications are subject to change without notice.

© 2026 Mitsubishi Electric Trane HVAC US LLC. All rights reserved.

EAHV-M040, 050YCLU-N(-BS)

NOTE 1. CONNECT COOL (HOT) WATER PIPES WHILE MAKING SURE OF CONNECTING THE INLETS AND OUTLETS CORRECTLY.
NOTE 2. INTRUSION OF FOREIGN MATERIALS INTO THE HEAT EXCHANGER MAY CAUSE PERFORMANCE DEGRADATION OR FREEZING.
BE SURE TO INSTALL CLEANABLE STRAINER (60 MESH OR MORE) TO THE INLET OF COOL (HOT) WATER PIPES.
NOTE 3. FOR HOW TO DRAW IN POWER CABLES OR CONNECT COOL (HOT) WATER PIPES, REFER TO THE SEPARATE DOCUMENT.
NOTE 4. THE HOUSING TYPE JOINTS FOR CONNECTING A COOL (HOT) WATER INLET AND OUTLET SHOULD BE PREPARED ON SITE.
NOTE 5. THE VALUES OF A AND B IN THE FIGURE ARE AS FOLLOWS.
NOTE 6. DIMENSIONS WILL VARY DEPENDING ON NEC/CODE REQUIRED CLEARANCE. CONSULT WITH LOCAL AUTHORITY FOR REQUIRED CLEARANCE.

NO.	NAME	DESCRIPTION
1)	COOL (HOT) WATER INLET	6B HOUSING TYPE JOINT ATTACHED (× 1)
2)	COOL (HOT) WATER OUTLET	6B HOUSING TYPE JOINT ATTACHED (× 1)
3)	DRAIN OPENING	R1 1/2 EXTERNAL THREAD
4)	POWER CABLE INLET	ø66(2-19/32) × 1 OR ø89(3-1/2) × 1
5)	SIGNAL CABLE INLET (LOW CURRENT CABLE)	ø34(1-11/32) × 2
6)	SIGNAL CABLE INLET (HIGH CURRENT CABLE)	ø34(1-11/32)

DIMENSION "A"		
MODULE COUNT	A - 36" CLEARANCE @ BASE, INCHES	A - 48" CLEARANCE @ BASE, INCHES
1	42-17/32	42-17/32
2	108- 5/16	120- 5/16
3	174- 3/32	198- 3/32
4	239- 7/8	275- 7/8
5	305-21/32	353-21/32
6	371- 7/16	431- 7/16

LABLED DIMENSIONS *6		
Label	36" CLEARANCE @ BASE, INCHES	48" CLEARANCE @ BASE, INCHES
A	SEE DIMENSION "A" TABLE	
BELOW - REFERENCE PANEL END VIEW		
B	65-25/32	77-25/32
C	61- 1/8	73- 1/8
D	31-29/32	43-29/32
BELOW - REFERENCE TOP VIEW		
E	23- 1/4	35- 1/4
BELOW - REFERENCE PIPING END VIEW		
F	65-25/32	77-25/32
G	39-25/32	51-25/32
H	32-31/32	44-31/32

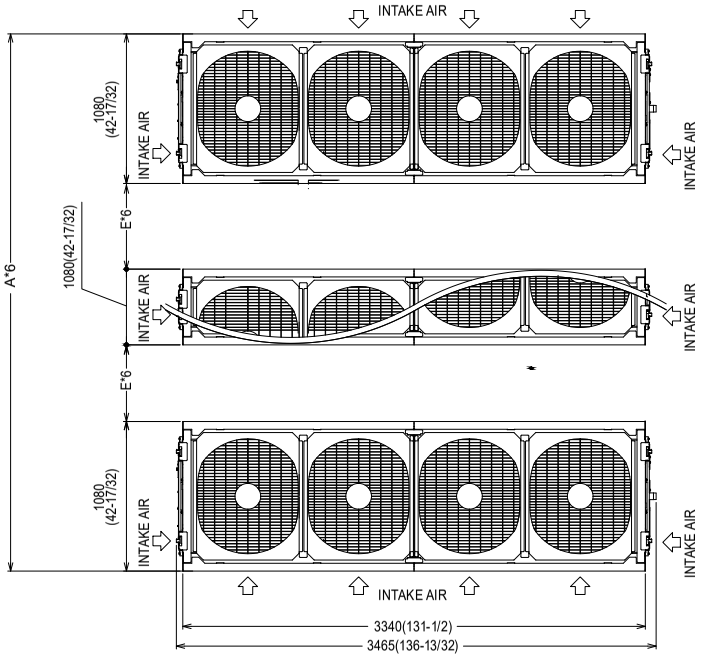

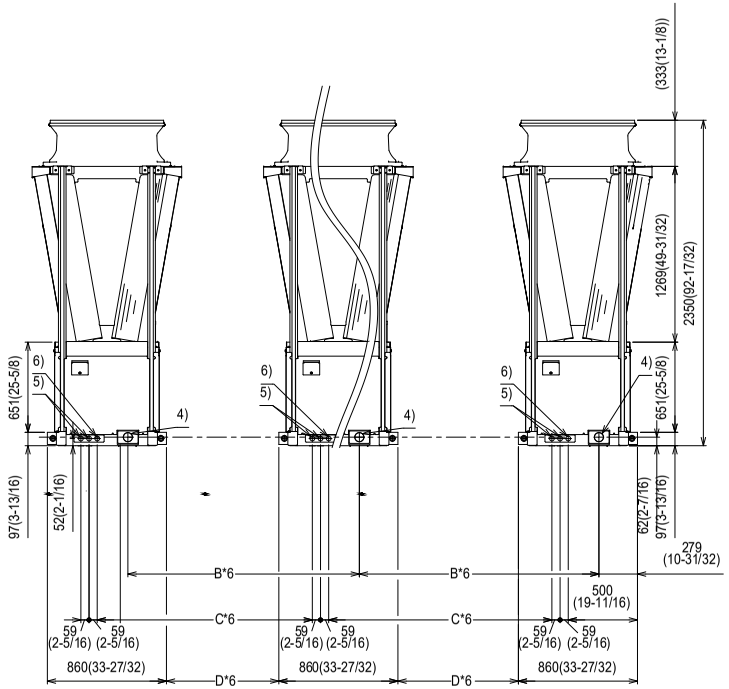

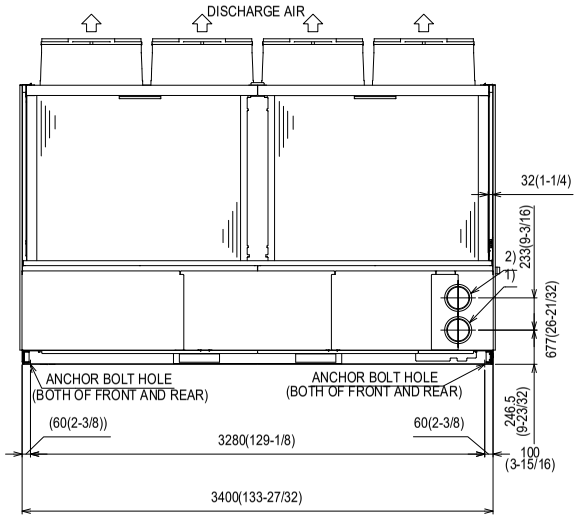

Unit: mm (in.)

EAHV-M040, 050YCLU-N(-BS)

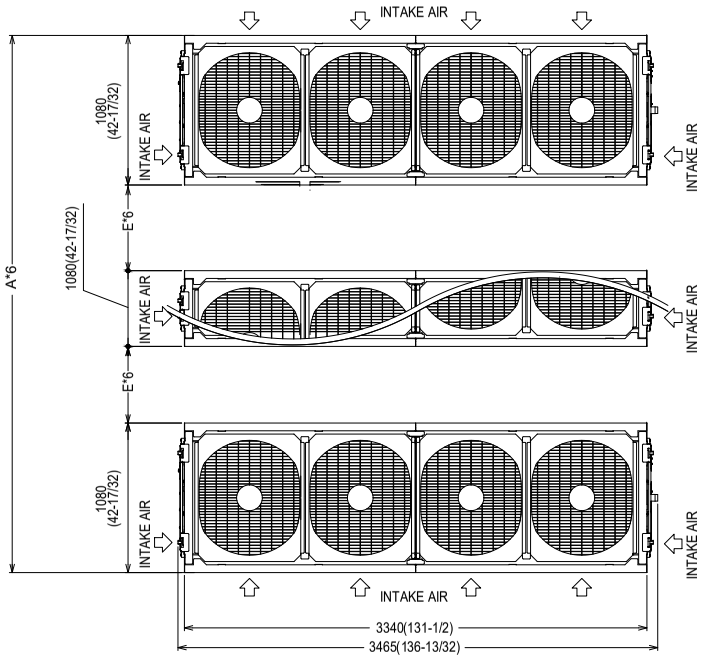

DIMENSION "A"		
MODULE COUNT	A - 36" CLEARANCE @ BASE, INCHES	A - 48" CLEARANCE @ BASE, INCHES
1	42-17/32	42-17/32
2	108- 5/16	120- 5/16
3	174- 3/32	198- 3/32
4	239- 7/8	275- 7/8
5	305-21/32	353-21/32
6	371- 7/16	431- 7/16

LABLED DIMENSIONS *6		
Label	36" CLEARANCE @ BASE, INCHES	48" CLEARANCE @ BASE, INCHES
A	SEE DIMENSION "A" TABLE	
BELOW - REFERENCE PANEL END VIEW		
B	65-25/32	77-25/32
C	61- 1/8	73- 1/8
D	31-29/32	43-29/32
BELOW - REFERENCE TOP VIEW		
E	23- 1/4	35- 1/4
BELOW - REFERENCE PIPING END VIEW		
F	65-25/32	77-25/32
G	39-25/32	51-25/32
H	32-31/32	44-31/32

NOTE 1. CONNECT COOL (HOT) WATER PIPES WHILE MAKING SURE OF CONNECTING THE INLETS AND OUTLETS CORRECTLY.

NOTE 2. INTRUSION OF FOREIGN MATERIALS INTO THE HEAT EXCHANGER MAY CAUSE PERFORMANCE DEGRADATION OR FREEZING.
BE SURE TO INSTALL CLEANABLE STRAINER (60 MESH OR MORE) TO THE INLET OF COOL (HOT) WATER PIPES.

NOTE 3. FOR HOW TO DRAW IN POWER CABLES OR CONNECT COOL (HOT) WATER PIPES, REFER TO THE SEPARATE DOCUMENT.

NOTE 4. THE HOUSING TYPE JOINTS FOR CONNECTING A COOL (HOT) WATER INLET AND OUTLET SHOULD BE PREPARED ON SITE.

NOTE 5. THE VALUES OF A AND B IN THE FIGURE ARE AS FOLLOWS.

NOTE 6. DIMENSIONS WILL VARY DEPENDING ON NEC/CODE REQUIRED CLEARANCE. CONSULT WITH LOCAL AUTHORITY FOR REQUIRED CLEARANCE.

NO.	NAME	DESCRIPTION
1)	COOL (HOT) WATER INLET	6B HOUSING TYPE JOINT ATTACHED (× 1)
2)	COOL (HOT) WATER OUTLET	6B HOUSING TYPE JOINT ATTACHED (× 1)
3)	DRAIN OPENING	R1 1/2 EXTERNAL THREAD
4)	POWER CABLE INLET	ø66(2-19/32) × 1 OR ø89(3-1/2) × 1
5)	SIGNAL CABLE INLET (LOW CURRENT CABLE)	ø34(1-11/32) × 2
6)	SIGNAL CABLE INLET (HIGH CURRENT CABLE)	ø34(1-11/32)

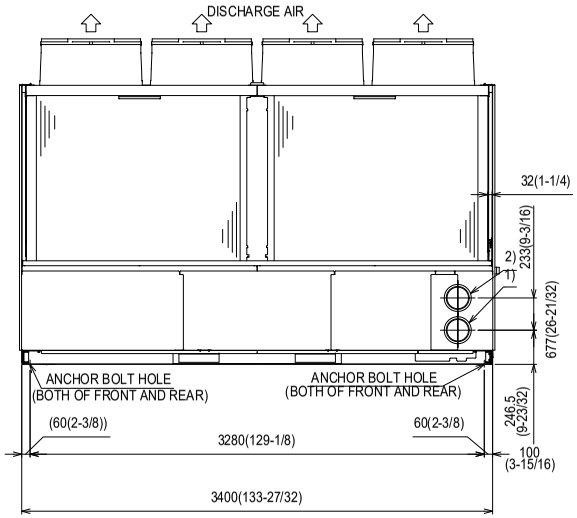

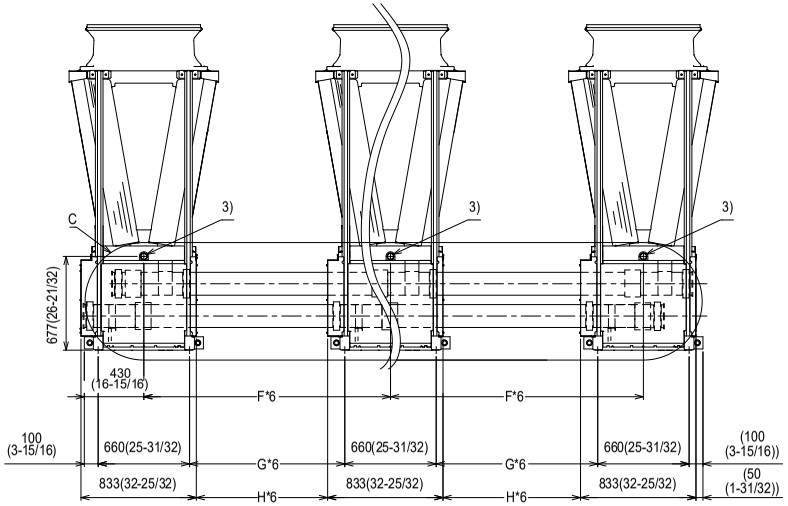

Unit: mm (in.)

EAHV-M040, 050YCLU-N(-BS)

Unit: mm (in.)

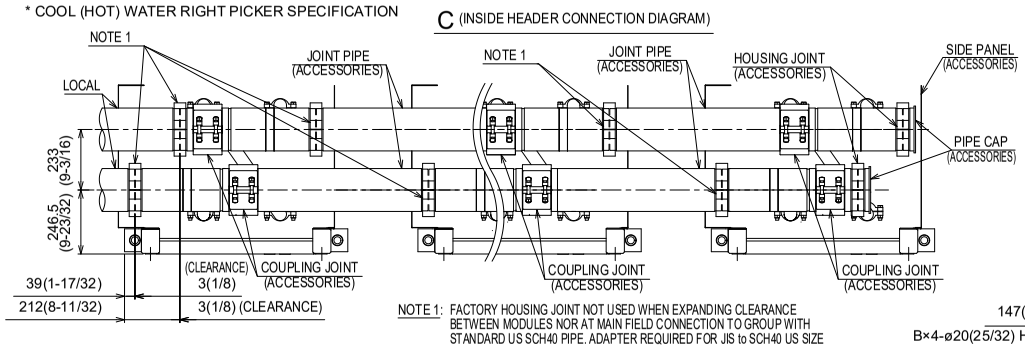

NOTE 1: FACTORY HOUSING JOINT NOT USED WHEN EXPANDING CLEARANCE BETWEEN MODULES NOR AT MAIN FIELD CONNECTION TO GROUP WITH STANDARD US SCH40 PIPE. ADAPTER REQUIRED FOR JIS to SCH40 US SIZE

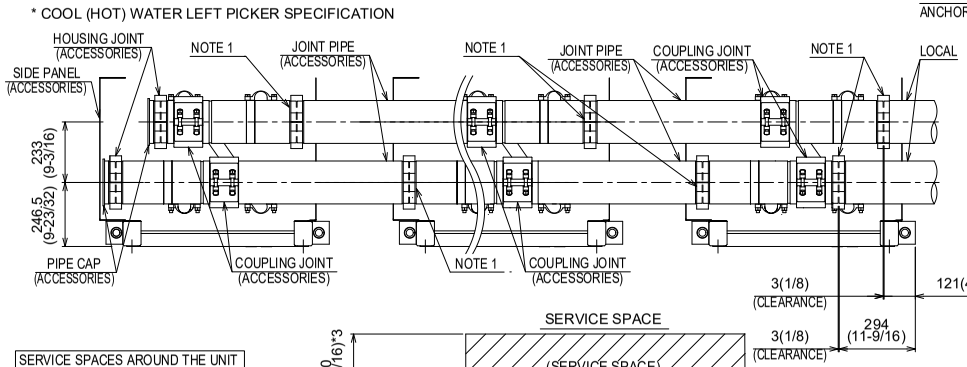

FOUNDATION CONSTRUCTION

1. THE FOUNDATION SHOULD BE MADE OF CONCRETE OR STEEL CAPABLE OF BEARING THE OPERATING MASS OF THE UNIT.
   THE FOUNDATION SHOULD ALLOW FOR WIRING.
2. A CONCRETE FOUNDATION REQUIRES ITS TOP FACE TO BE LEVEL AND FINISHED WITH MORTAR.
3. ANCHOR BOLTS SHOULD BE PREPARED ON SITE.
4. DIMENSIONS WILL VARY DEPENDING ON NEC/CODE REQUIRED CLEARANCE. CONSULT WITH LOCAL AUTHORITY FOR REQUIRED CLEARANCE.

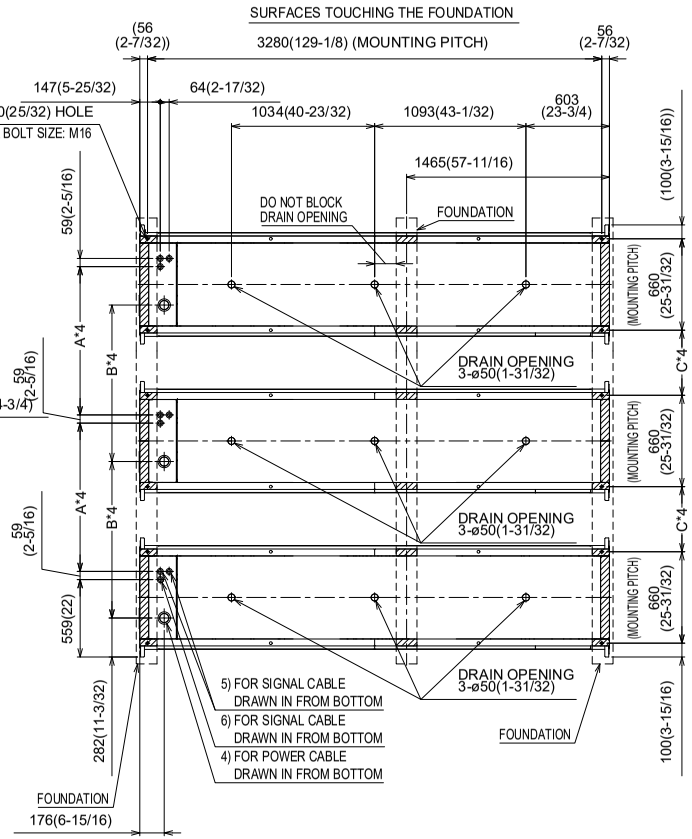

SERVICE SPACES AROUND THE UNIT

1. WHEN INSTALLING THE UNIT, BE SURE TO LEAVE A SERVICE SPACE FOR MAINTENANCE AND INSPECTION AROUND THE UNIT.
2. ENSURE THAT THERE ARE NOT ANY WALLS OR OTHER OBJECTS AROUND THE UNIT THAT PREVENT THE UNIT FROM DRAWING IN AIR.
3. DIMENSIONS WILL VARY DEPENDING ON NEC/CODE REQUIRED CLEARANCE. CONSULT WITH LOCAL AUTHORITY FOR REQUIRED CLEARANCE.

LABLED DIMENSIONS		
LABEL	36" CLEARANCE @ BASE, INCHES	48" CLEARANCE @ BASE, INCHES
A	63- 7/16	75- 7/16
B	65-25/32	77-25/32
C	39-25/32	51-25/32
D	36	48

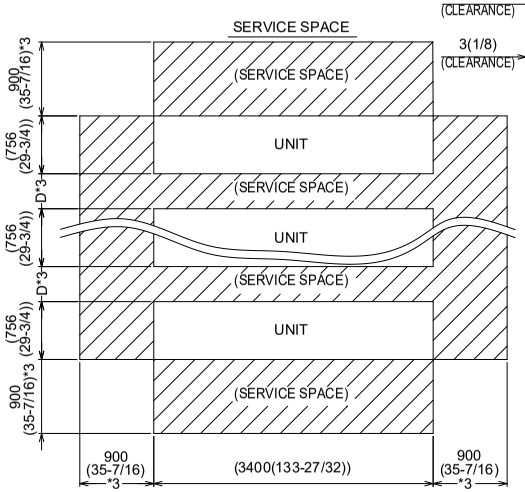

* SECTION SHOWS THE UNIT SURFACE TOUCHING THE FOUNDATION.