e-Chiller

EAHV-M1800YCL(-BS)

MITSUBISHI ELECTRIC
HEATING & AIR CONDITIONING

Job Name:
System Reference: Date:

415V Air To Water Heat Pump Chiller

NON - Insider Header Model

R32 LOW GWP Heat Pump Air To Water Chiller Capable of Delivering Chilled and Hot Water for Building HVAC

UNIT OPTION

- ☑ Standard Model.....EAHV-M1800YCL
- ☐ Seacoast (BS) Model.....EAHV-M1800YCL-BS

ACCESSORIES

- ☐ Fin Guard..... EC-130FG
- ☐ Remote Sens. (Requires 2 w/ Sys Leader).....TW-TH16-E
- ☐ Remote Controller.....PAR-W31MAA

Specification Unit Type			System EAHV-M1800YCL(-BS)
Power source			3-phase 4-wire 380-400-415V 50/60Hz, +/- 5%
Cooling capacity *1		kW	180.00
		kcal/h	154,800
		BTU/h	614,160
	Power input	kW	57.02
	EER		3.16
	IPLV *6		6.31
	Water flow rate	m^3/h	31.0
Cooling capacity (EN14511) *2		kW	178.80
		kcal/h	153,768
		BTU/h	610,066
	Power input	kW	58.22
	EER		3.07
	Eurovent efficiency class		B
	SEER		5.36
	ηsc	%	211.4
	Water flow rate	m^3/h	31.0
Heating capacity *3		kW	180.00
		kcal/h	154,800
		BTU/h	614,160
	Power input	kW	53.09
	COP		3.39
	Water flow rate	m^3/h	31.0
Heating capacity (EN14511) *4		kW	181.20
		kcal/h	155,832
		BTU/h	618,254
	Power input	kW	54.29
	COP		3.34
	SCOP Low/Medium		3.31/2.88
	ηsh Low/Medium	%	129.0/112.0
	Water flow rate	m^3/h	31.0
Current input	Cooling current 380-400-415V *1	A	96 - 91 - 88
	Heating current 380-400-415V *3	A	90 - 85 - 82
	Maximum current	A	120
Water pressure drop *1	Standard piping	kPa	79
	Inside header piping	kPa	190
Temp range	Cooling	°C	Outlet water 4~30 *7
		°F	Outlet water 39.2~86 *7
	Heating	°C	Outlet water 25~55 *7
		°F	Outlet water 77~131 *7
	Outdoor (Cooling)	°C	-15~52 *7
		°F	5~125.6 *7
	Outdoor (Heating)	°C	-20~43 *7
		°F	-4~109.4 *7
Circulating water volume range		m^3/h	12.9~43.0

Specifications are subject to change without notice.

© 2025 Mitsubishi Electric Trane HVAC US LLC. All rights reserved.

Specification Unit Type			System EAHV-M1800YCL(-BS)
Sound pressure level (measured in anechoic room) at 1m *1		dB (A)	67
Sound power level (measured in anechoic room) *1		dB (A)	85
Diameter of water pipe (Standard piping)	Inlet	mm (in)	65A (2 1/2B) housing type joint
	Outlet	mm (in)	65A (2 1/2B) housing type joint
Diameter of water pipe (Inside header piping)	Inlet	mm (in)	150A (6B) housing type joint
	Outlet	mm (in)	150A (6B) housing type joint
External finish			Polyester powder coating steel plate
External dimension H × W × D		mm	2350 × 3400 × 1080
Net weight	Standard piping	kg (lbs)	1280 (2822)
	Inside header piping	kg (lbs)	1307 (2881)
Design pressure	R32	MPa	4.15
	Water	MPa	1.0
Heat exchanger	Water side		Stainless steel plate and copper brazing
	Air side		Salt-resistant cross fin & aluminium tube
Compressor	Type		Inverter scroll hermetic compressor
	Maker		MITSUBISHI ELECTRIC CORPORATION
	Starting method		Inverter
	Quantity		4
	Motor output	kW	11.5 × 4
	Lubricant		MEL46EH
Fan	Air flow rate	m^3/min	270 × 4
		L/s	4500 × 4
		cfm	9534 × 4
	Type, Quantity		Propeller fan × 4
	Starting method		Inverter
	Motor output	kW	0.92 × 4
	External static pressure	Pa	20
Protection	High pressure protection		High pressure sensor & High pressure switch at 4.15MPa (601psi)
	Inverter circuit		Over-heat protection, Over current protection
	Compressor		Over-heat protection
Refrigerant	Type × charge		R32 × 11.5 (kg) × 4 *5
	Control		LEV

Notes:

*1 Under normal cooling conditions at outdoor temp 35°CDB/24°CWB (95°FDB / 75.2°FWB) outlet water temp 7°C (44.6°F) inlet water temp 12°C (53.6°F). Pump input is not included in cooling capacity and power input.
*2 Under normal cooling conditions at outdoor temp 35°CDB/24°CWB (95°FDB/75.2°FWB) outlet water temp 7°C (44.6°F) inlet water temp 12°C (53.6°F). Pump input is included in cooling capacity and power input based on EN14511.
*3 Under normal heating conditions at outdoor temp 7°CDB/6°CWB (44.6°FDB/42.8°FWB) outlet water temp 45°C (113°F) inlet water temp 40°C (104°F). Pump input is not included in heating capacity and power input.
*4 Under normal heating conditions at outdoor temp 7°CDB/6°CWB (44.6°FDB/42.8°FWB) outlet water temp 45°C (113°F) inlet water temp 40°C (104°F). Pump input is included in heating capacity and power input based on EN14511.
*5 Amount of factory-charged refrigerant is 2.95 (kg) × 4. Please add the refrigerant at the field.
*6 IPLV is calculated in accordance with AHRI 551-591.
*Please don't use the steel material for the water piping.
*Please always make water circulate, or pull the circulation water out completely when not in use.
*Please do not use groundwater or well water in direct.
*The water circuit must be closed circuit.
*Due to continuous improvement, the above specifications may be subject to change without notice.
*This model doesn't equip with a pump.
*7 Please refer to 2-1-6. Operation temperature range.

Unit converter

kcal/h = kW × 860
BTU/h = kW × 3,412
lbs = kg/0.4536
cfm = m^3/min × 35.31

© 2025 Mitsubishi Electric Trane HVAC US LLC. All rights reserved.

EAHV-M1500, 1800YCL(-BS)

Unit: mm

NO.	NAME	DESCRIPTION
1)	COOL (HOT) WATER INLET	2½B HOUSING TYPE JOINT ATTACHED (×1)
2)	COOL (HOT) WATER OUTLET	2½B HOUSING TYPE JOINT ATTACHED (×1)
3)	DRAIN OPENING	R1½ EXTERNAL THREAD
4)	POWER CABLE INLET	ø66 × 1 OR ø89 × 1
5)	SIGNAL CABLE INLET (LOW CURRENT CABLE)	ø34 × 2
6)	SIGNAL CABLE INLET (HIGH CURRENT CABLE)	ø34

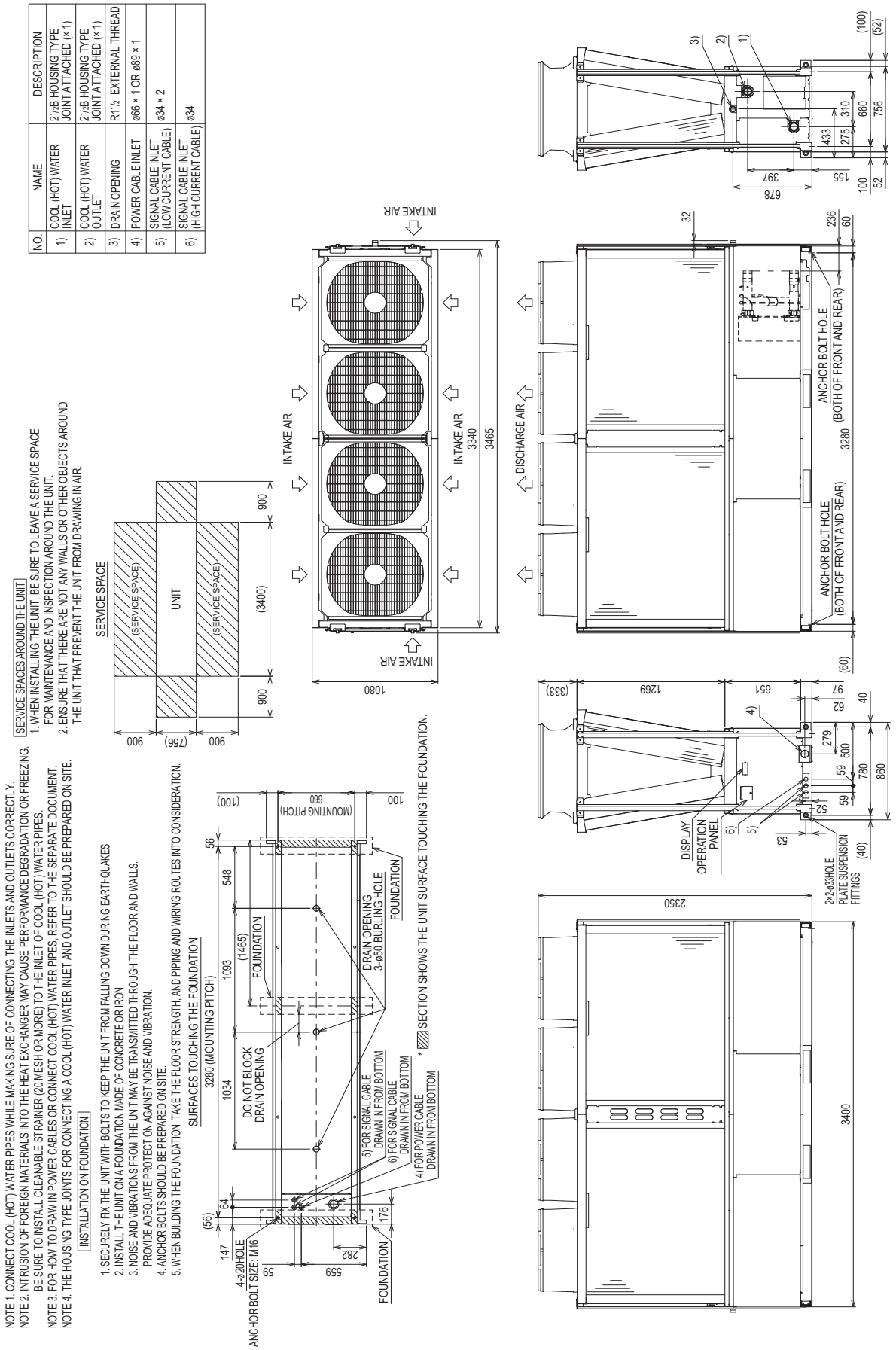

© 2025 Mitsubishi Electric Trane HVAC US LLC. All rights reserved.

EAHV-M1500, 1800YCL(-BS)

Unit: mm

NO.	NAME	DESCRIPTION
1)	COOL (HOT) WATER INLET	2½B HOUSING TYPE JOINT ATTACHED (× 1)
2)	COOL (HOT) WATER OUTLET	2½B HOUSING TYPE JOINT ATTACHED (× 1)
3)	DRAIN OPENING	R1½ EXTERNAL THREAD
4)	POWER CABLE INLET	ø66 × 1 OR ø89 × 1
5)	SIGNAL CABLE INLET (LOW CURRENT CABLE)	ø34 × 2
6)	SIGNAL CABLE INLET (HIGH CURRENT CABLE)	ø34

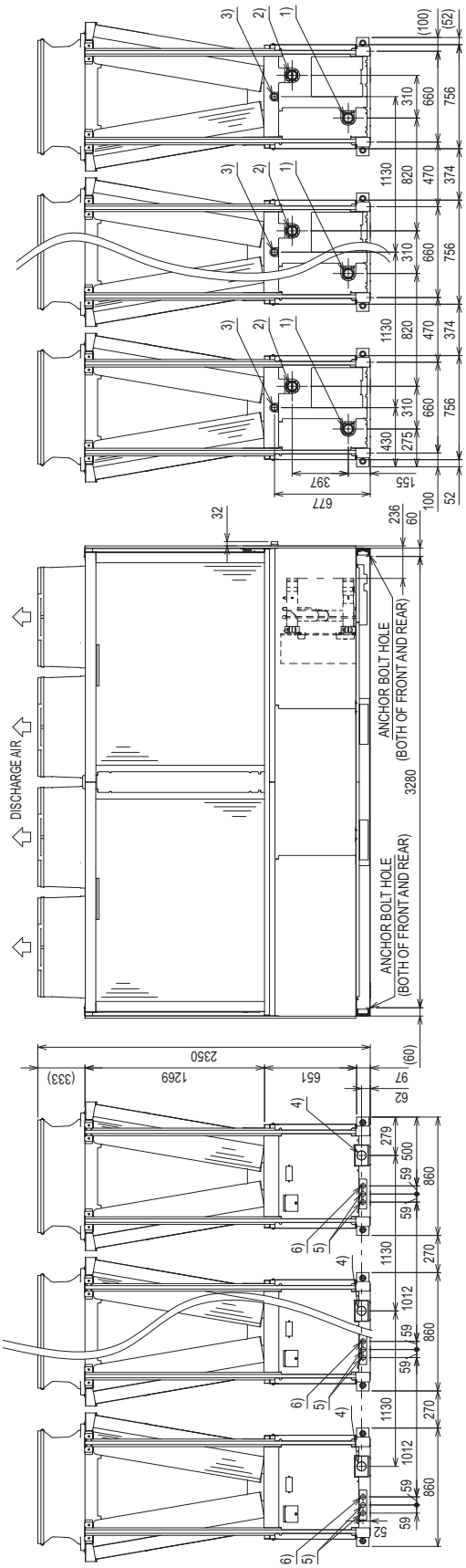

NOTE 1. CONNECT COOL (HOT) WATER PIPES WHILE MAKING SURE OF CONNECTING THE INLETS AND OUTLETS CORRECTLY.
NOTE 2. INTRUSION OF FOREIGN MATERIALS INTO THE HEAT EXCHANGER MAY CAUSE PERFORMANCE DEGRADATION OR FREEZING. BE SURE TO INSTALL CLEANABLE STRAINER (20 MESH OR MORE) TO THE INLET OF COOL (HOT) WATER PIPES.
NOTE 3. FOR HOW TO DRAW IN POWER CABLES OR CONNECT COOL (HOT) WATER PIPES, REFER TO THE SEPARATE DOCUMENT.
NOTE 4. THE HOUSING TYPE JOINTS FOR CONNECTING A COOL (HOT) WATER INLET AND OUTLET SHOULD BE PREPARED ON SITE.
NOTE 5. THE VALUES OF A TO C IN THE FIGURE ARE AS FOLLOWS.

MODULE COUNT	A	B (HANGING HOLE COUNT)	C (FOUNDATION HOLE COUNT)
1 MODULE	1080	1	1
2 MODULES	2210	2	2
3 MODULES	3340	3	3
4 MODULES	4470	4	4
5 MODULES	5600	5	5
6 MODULES	6730	6	6
7 MODULES	7860	7	7
8 MODULES	8990	8	8
9 MODULES	10120	9	9
10 MODULES	11250	10	10
11 MODULES	12380	11	11
12 MODULES	13510	12	12

© 2025 Mitsubishi Electric Trane HVAC US LLC. All rights reserved.

EAHV-M1500, 1800YCL(-BS)

Unit: mm

SERVICE SPACES AROUND THE UNIT

1. WHEN INSTALLING THE UNIT, BE SURE TO LEAVE A SERVICE SPACE FOR MAINTENANCE AND INSPECTION AROUND THE UNIT.
2. ENSURE THAT THERE ARE NOT ANY WALLS OR OTHER OBJECTS AROUND THE UNIT THAT PREVENT THE UNIT FROM DRAWING IN AIR.

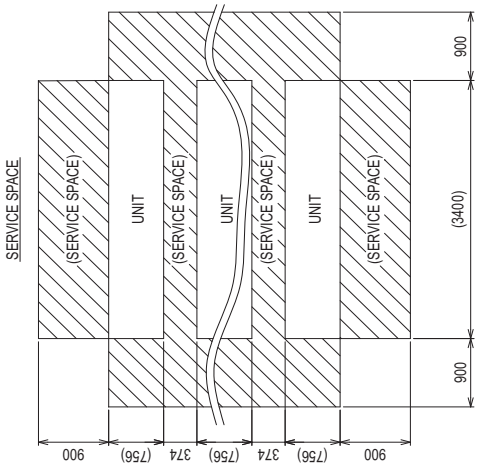

FOUNDATION CONSTRUCTION

1. THE FOUNDATION SHOULD BE MADE OF CONCRETE OR STEEL CAPABLE OF BEARING THE OPERATING MASS OF THE UNIT. THE FOUNDATION SHOULD ALLOW FOR WIRING.
2. A CONCRETE FOUNDATION REQUIRES ITS TOP FACE TO BE LEVEL AND FINISHED WITH MORTAR.
3. ANCHOR BOLTS SHOULD BE PREPARED ON SITE.

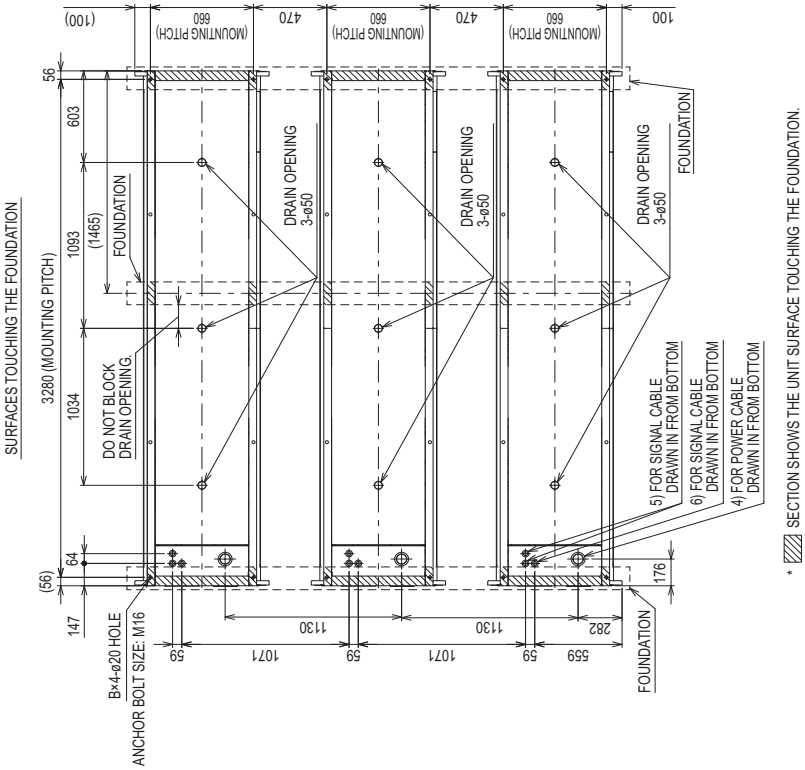

* SECTION SHOWS THE UNIT SURFACE TOUCHING THE FOUNDATION.

© 2025 Mitsubishi Electric Trane HVAC US LLC. All rights reserved.

Water circuit

Please build the water circuit so that it is a closed system.
Do not use water directly for showers or other applications. Do not allow other heat source water to mix with the water circuit. Build a water circuit as inlet water temperature fluctuation is within 5ºC/10 minutes.

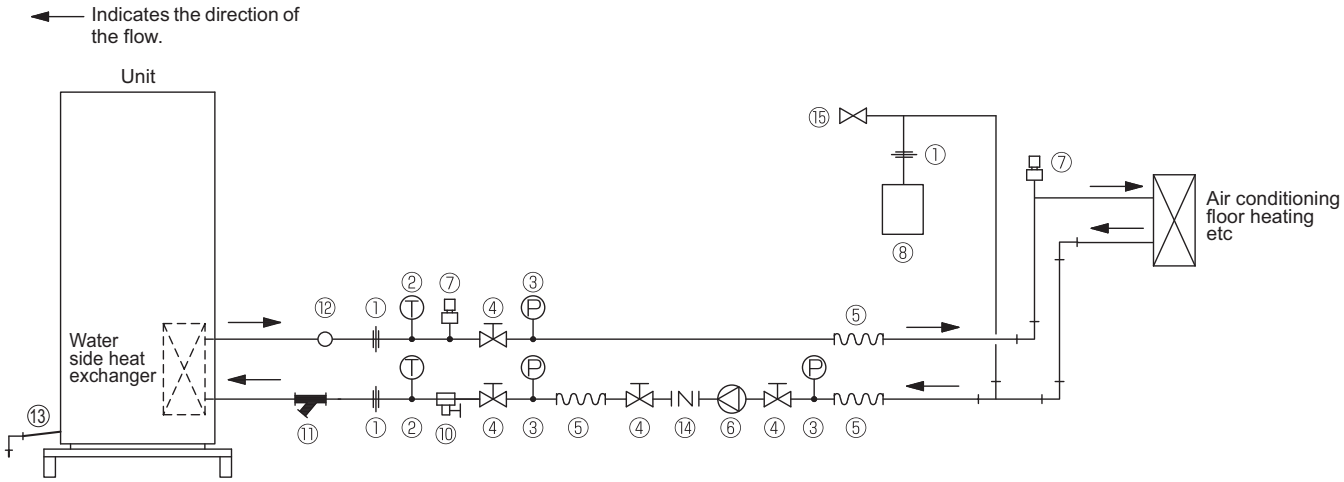

① Union joints/flange joints	Required to allow for a replacement of equipment.
② Thermometer	Required to check the performance and monitor the operation of the units.
③ Water pressure gauge	Recommended for checking the operation status.
④ Valve	Required to allow for a replacement or cleaning of the flow adjuster.
⑤ Flexible joint	Recommended to prevent the noise and vibration from the pump from being transmitted.
⑥ Pump	Use a pump that is large enough to compensate for the total water pressure loss and supply sufficient water to the unit.
⑦ Automatic air vent valve	Install automatic air vent valves where air accumulates. Even in the case of a failure of the water-side heat exchanger in the unit, the refrigerant may leak from the automatic air vent valve. To prevent accidents resulted from refrigerant leakage, install the unit where leaked refrigerant will not accumulate, such as outdoors.
⑧ Closed expansion tank	Install a closed expansion tank to accommodate expanded water and to supply water.
⑨ Water pipe	Use pipes that allow for easy air purging, and provide adequate insulation.
⑩ Drain valve	Install drain valves so that water can be drained for servicing.
⑪ Strainer	Install a strainer near the unit to keep foreign materials from entering the water-side head exchanger.
⑫ Flow switch	Required to protect the unit.
⑬ Drain pipe	Install the drain pipe with a downward inclination of between 1/100 and 1/200. To prevent drain water from freezing in winter, install the drain pipe as steep an angle as practically possible and minimize the straight line. For cold climate installation, take an appropriate measure (e.g., drain heater) to prevent the drain water from freezing.
⑭ Check valve	Required to prevent the backward flow.
⑮ Safety valve	Install a safety valve near the closed expansion tank. Even in the case of a failure of the water-side heat exchanger in the unit, the refrigerant may leak from the safety valve. To prevent accidents resulted from refrigerant leakage, install the unit where leaked refrigerant will not accumulate, such as outdoors.

© 2025 Mitsubishi Electric Trane HVAC US LLC. All rights reserved.