October 2025 No. U325H-C

MITSUBISHI ELECTRIC

LOSSNAY ENERGY RECOVERY VENTILATOR

HANDBOOK

MODELS

TLGHF0940RVXT02A
TLGHF1200RVXT02A
TLGHF1500RVXT02A
LGH-F940RVXT2-E
LGH-F1200RVXT2-E
LGH-F1500RVXT2-E

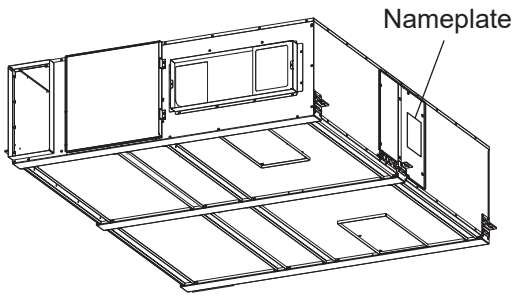

Remote controller (Optional)

TZ-62DR-EA
PZ-62DR-EA
PZ-43SMF-E

Filter (Optional)

PZ-250TRFA-E
PZ-250TPF-E

Warning:
Repair work must be performed by the manufacturer, its service agent or a similarly qualified person in order to avoid hazards.

MITSUBISHI ELECTRIC CORPORATION

Contents

1. Safety precautions ····· 3
2. Specifications ····· 4-5
3. Outside dimensions ····· 6-8
4. Electrical wiring diagram ····· 9
5. Circuit board diagrams ····· 10-11
6. Troubleshooting ····· 12-42
    6-1 Service flowchart ····· 12-13
    6-2 Check details ····· 13-42
7. Overhauling procedures ····· 43-57

PARTS CATALOG (U325)

1. Safety precautions

- Read the following precautions thoroughly before the maintenance, and then inspect and repair the product in a safe manner.
- The types and levels of danger that may arise if the product is handled improperly are described with the warning symbols shown below.

⚠ Warning

Improper handling of the product may result in serious injury or death.

◇ **Electric shock**
If you must inspect the circuitry while the power is on, do not touch the live parts.

(Failure to observe this warning may result in electric shock.)

Caution against electric shock

◇ **Turn off the power supply**
Be sure to shut off the power supply isolator before disassembling the unit for repair.

(Failure to observe this warning may result in electric shock.)

Be sure to follow this instruction.

◇ **Modification is prohibited**
Do not modify the unit.

(Failure to observe this warning may result in electric shock, fire and/or injury.)

Prohibited

◇ **Use proper parts and tools**
For repair, be sure to use the parts listed in the parts catalog of the applicable model and use the proper tools.

(Failure to observe this warning may result in electric shock, fire and/or injury.)

Be sure to follow this instruction.

◇ **Proper electric work**
Qualified electricians shall conduct electric work in accordance with your local electric work regulations and the installation manuals.

(Improper connection or wiring installation may result in electric shock and/or fire.)

Be sure to follow this instruction.

◇ **Replace damaged and/or degraded parts**
Be sure to replace the power cord and lead wires if they are damaged and/or degraded.

(Failure to observe this warning may result in electric shock and/or fire.)

Be sure to follow this instruction.

◇ **Check insulation**
Upon completing repair work, always measure the insulation resistance. Verify that it is at least 10 MΩ (with a 500-V DC insulation resistance tester), and then turn on the power.

(Inadequate insulation may result in electric shock.)

Be sure to follow this instruction.

⚠ Caution

Improper handling of the product may result in injury or damage to properties including buildings and equipment.

◇ **Caution for injury**
Do not work at a location where you do not have a sure footing.

(Failure to observe this caution may result in a fall.)

Prohibited

◇ **Wear gloves**
Wear gloves when servicing.

(Failure to observe this caution may result in injury to your hands from sharp metal or other edges.)

Be sure to follow this instruction.

Notes for servicing

- Inspect the earth condition, and repair it if it is incomplete. Make sure that a power supply isolator and an overload protection device are installed. If they are not installed, recommend the customer to install them.

- Make sure that the product operates properly upon completion of repair. Clean the product and the surrounding area, and then notify the customer of the completion of repair.

2. Specifications

Model name	TLGHF0940RVXT02A, TLGHF1200RVXT02A, TLGHF1500RVXT02A LGH-F940RVXT2-E, LGH-F1200RVXT2-E, LGH-F1500RVXT2-E
Heat exchange system	Energy recovery ventilating system
Heat exchanger material	Special treated paper plate heat exchanger
Cladding	Galvanized steel sheet
Heat insulation material	Self-extinguishing urethane foam
Motor	EC motor
Filter	MERV 7, ISO Coarse 65% (ISO 16890:2016)
Surrounding air condition	Shall be between 14°F (-10°C) and 104°F (40°C), 80%RH or less
Suction air condition	Shall be lower than 104°F (40°C), 80%RH
Supply fan operation under low outdoor temperature	14°F (-10°C) to 5°F (-15°C) : Intermittent operation 60 min ON, 10 min OFF 5°F (-15°C) or less: Sensing operation 55 min OFF, 5 min ON
Function	Energy recovery ventilation/Bypass ventilation
Electrical power supply	208-240 V Three-phase 60 Hz
Insulation resistance	10 MΩ or more
Dielectric strength	1000 V AC 1 minute

Model name	Input power (W)	Air volume		Specific fan power	External static pressure		Exchange efficiency (%)				Noise (dB)	Dia. of the centrifugal fan (Inch (mm))	Weight	
							Temperature		Enthalpy					
		(CFM)	(CMH)	(W/CFM)	(InH2O)	(Pa)	Heating	Cooling	Heating	Cooling			(lbs)	(kg)
TLGHF0940RVXT02A LGH-F940RVXT2-E	641	942	1600	0.69	0.72	180	81.5	71.0	79.0	62.0	38.5	9 5/8 (245)	393	178
TLGHF1200RVXT02A LGH-F1200RVXT2-E	1012	1177	2000	0.86	0.72	180	80.0	68.0	77.0	59.0	40.5	9 5/8 (245)	393	178
TLGHF1500RVXT02A LGH-F1500RVXT2-E	1323	1471	2500	0.90	0.72	180	76.5	66.0	73.5	57.0	42.5	9 5/8 (245)	393	178

* The above values apply during energy recovery ventilation when the fan speed is set to Fan speed 4 at the rating pressure loss and 208 V / 60 Hz.
* For the specifications at the other frequency or voltages, see the spec. sheets.
* The values given in the table for the noise level reflect the levels measured at a position 4.9 feet (1.5 m) immediately below the unit in an anechoic chamber.
* Noise change or increase may occur because of the Bypass-Automatic function or Automatic fan speed change by timer setting and/or other functions.
* Temperature exchange efficiency (%) is based on a winter condition.
* On-site commissioning measurements by pitot tube method could be as much 20% different from ISO test room conditions. If the measuring point is close to sources of turbulence like bends, contractions and dampers, etc., it is difficult to measure air volume correctly. A straight duct length more than 10 D (D=duct diameter) from the source of turbulence is recommended for correct measurement. On-site measurement should therefore be measured in accordance with BSRIA guideline (Commissioning Air System. Application procedures for buildings AG3/89.3 (2001)).

■ **Remote controller**

Model name	TZ-62DR-EA, PZ-62DR-EA	PZ-43SMF-E
Power supply requirement	12 V DC (Supplied from Lossnay unit)	
Power consumption	0.3 W	
Transmission cable	Non polarized 2-core cable (0.3 mm^2 (AWG22) sheathed cable)	
Total wiring length	219 yd. (200 m) maximum	
The number of controllable Lossnay units	15 Lossnay units maximum (Max. 2 remote controllers installable)	
Environmental condition	Temperature: 32°F to 104°F (0°C to 40°C), Humidity: 30% to 90% relative humidity (no condensation)	
Size	4 3/4 x 4 3/4 x 3/4 inch (120 x 120 x 19 mm)	4 3/4 x 2 3/4 x 9/16 inch (120 x 70 x 15 mm)
Weight	9/16 lbs (0.25 kg)	7/32 lbs (0.10 kg)
Color	Grayish white	White

3. Outside dimensions

TLGHF0940RVXT02A, TLGHF1200RVXT02A, TLGHF1500RVXT02A
LGH-F940RVXT2-E, LGH-F1200RVXT2-E, LGH-F1500RVXT2-E

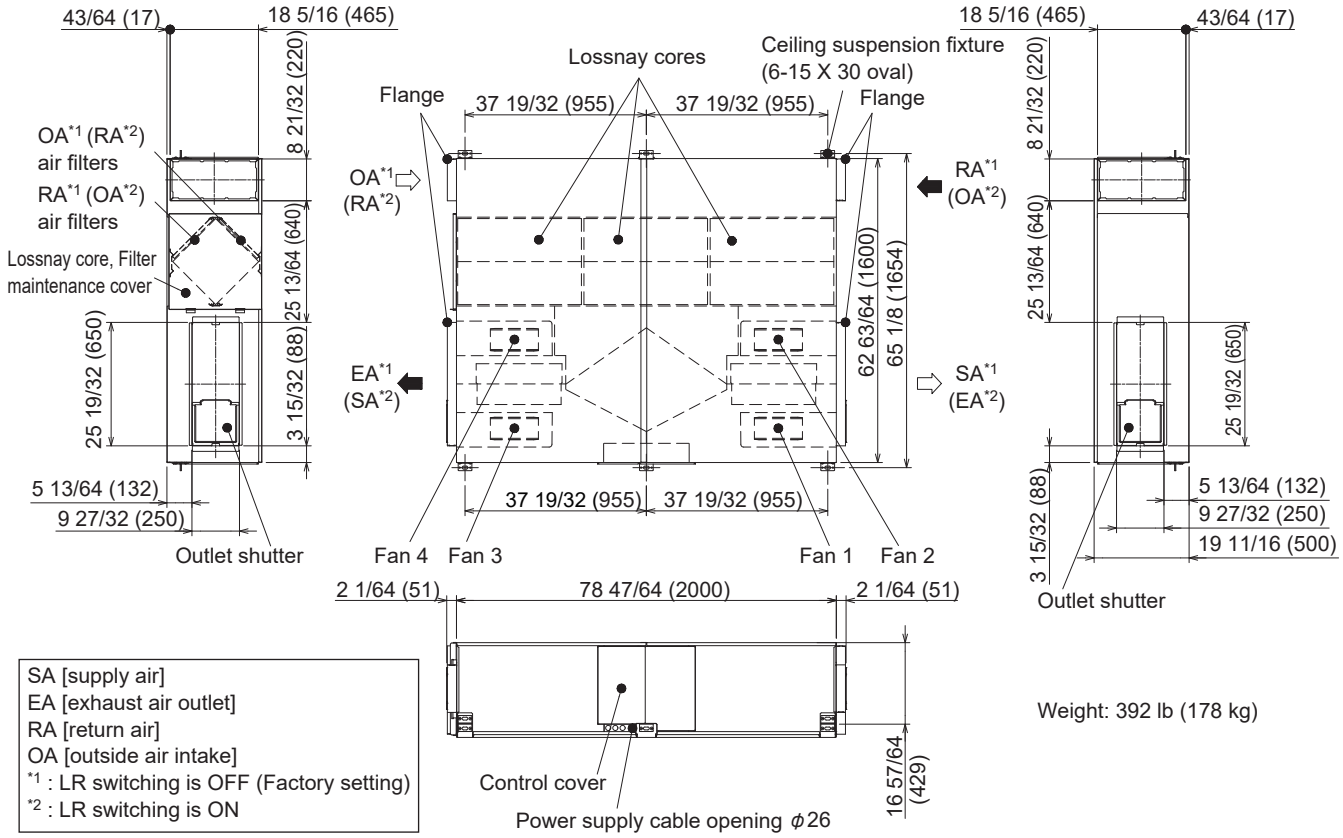

SA [supply air]
EA [exhaust air outlet]
RA [return air]
OA [outside air intake]
*1 : LR switching is OFF (Factory setting)
*2 : LR switching is ON

Weight: 392 lb (178 kg)

Reference for maintenance space

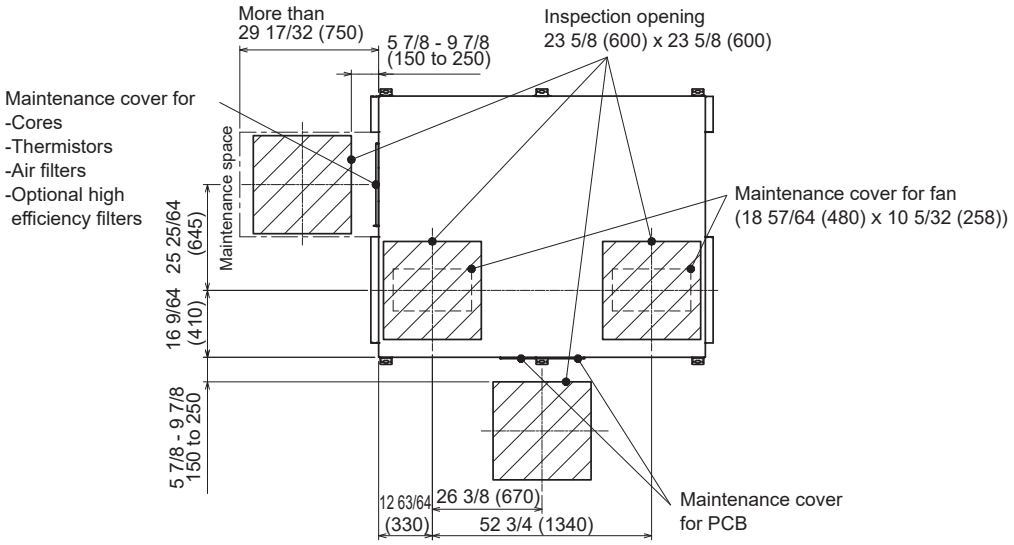

Unit: Inch (mm)

TZ-62DR-EA, PZ-62DR-EA

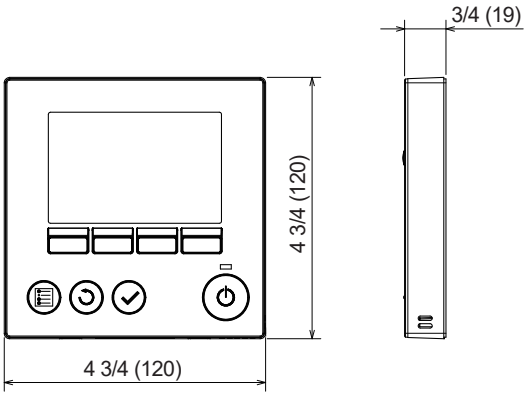

Unit: Inch (mm)

PZ-43SMF-E

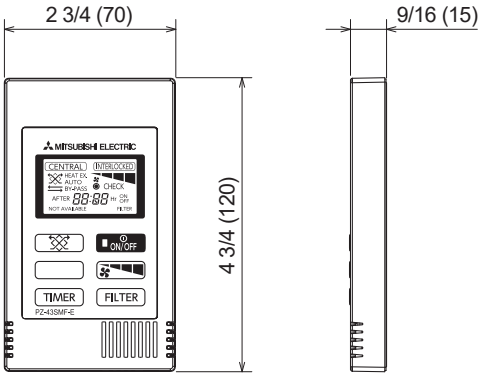

Unit: Inch (mm)

PZ-250TRFA-E

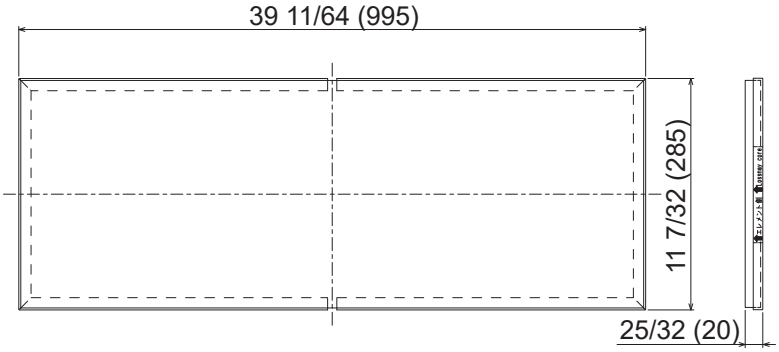

* The filters are comprised of one set of the same filters as those built in the product.

The number of filters per set	Applicable Lossnay model
4	TLGHF0940RVXT02A TLGHF1200RVXT02A TLGHF1500RVXT02A LGH-F940RVXT2-E LGH-F1200RVXT2-E LGH-F1500RVXT2-E

Unit: Inch (mm)

PZ-250TPF-E

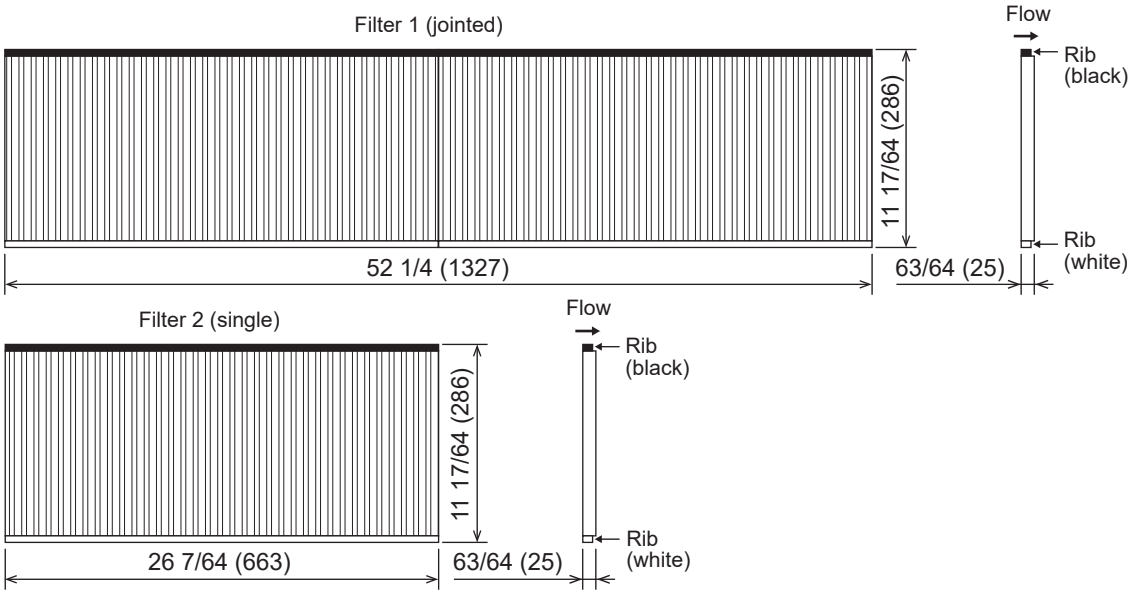

The number of filters per set		Applicable Lossnay model
Filter 1 (jointed)	Filter 2 (single)	
1	1	TLGHF0940RVXT02A TLGHF1200RVXT02A TLGHF1500RVXT02A LGH-F940RVXT2-E LGH-F1200RVXT2-E LGH-F1500RVXT2-E

Unit: Inch (mm)

4. Electrical wiring diagram

TLGHF0940RVXT02A, TLGHF1200RVXT02A, TLGHF1500RVXT02A
LGH-F940RVXT2-E, LGH-F1200RVXT2-E, LGH-F1500RVXT2-E

* Wiring for TM1, TM2, TM3, TM4, and TB5 shown in dotted lines are field work.
* Be sure to connect the earth wire.
* An all pole electric leakage isolator must be installed.
* Always use an isolator for the main power connection.

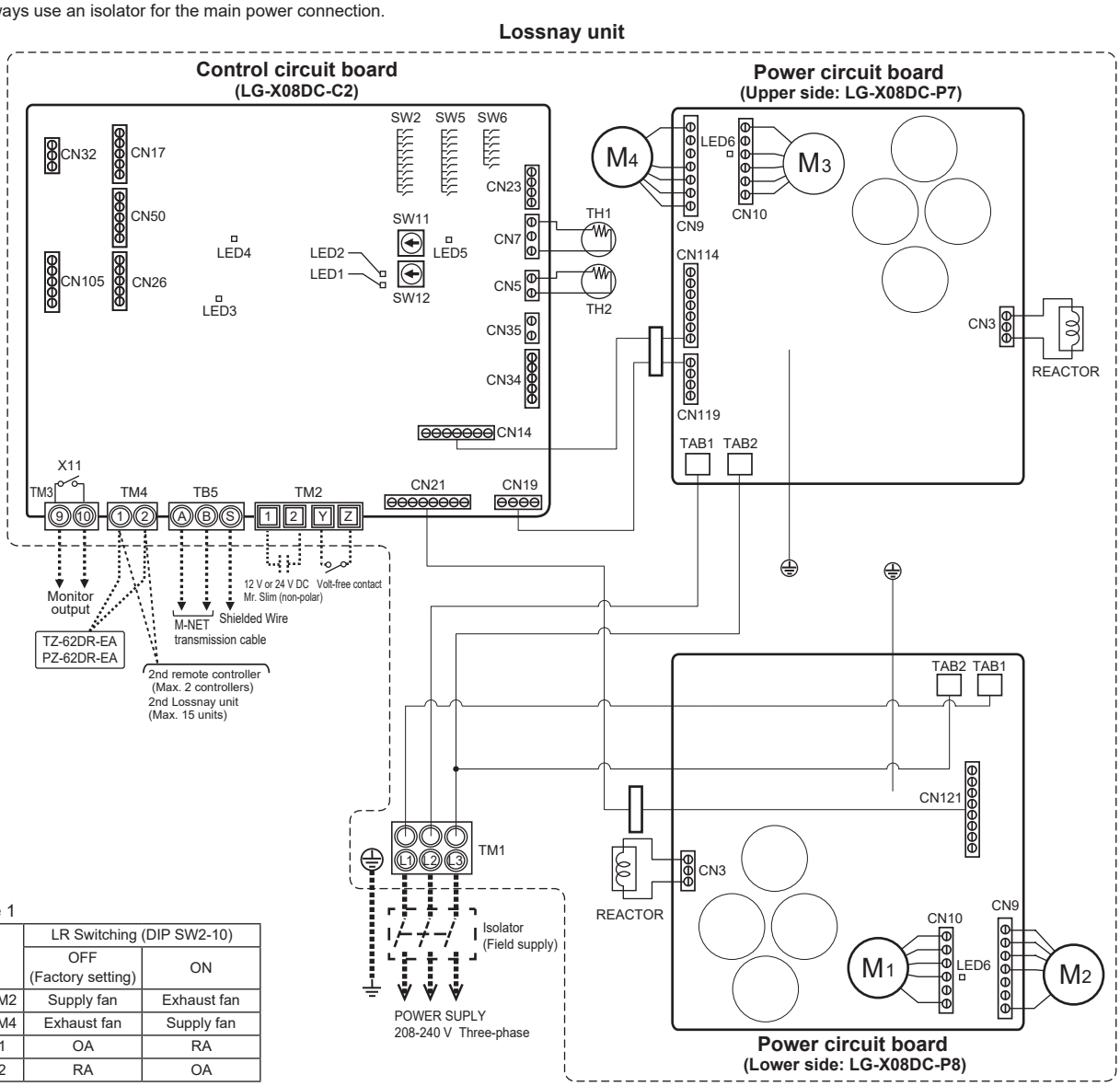

Table 1

	LR Switching (DIP SW2-10)	
	OFF (Factory setting)	ON
M1, M2	Supply fan	Exhaust fan
M3, M4	Exhaust fan	Supply fan
TH1	OA	RA
TH2	RA	OA

Definition of symbols		
M1: Motor for supply fan (outside) (See Table 1.)	CN3: Connector (Reactor)	CN34: Connector (CO_2 sensor output)
M2: Motor for supply fan (inside) (See Table 1.)	CN5: Connector (Thermistor)	CN35: Connector (CO_2 sensor input)
M3: Motor for exhaust fan (inside) (See Table 1.)	CN7: Connector (Thermistor)	CN50: Connector (Optional components: External monitor output)
M4: Motor for exhaust fan (outside) (See Table 1.)	CN9: Connector (Fan motor)	CN105: Connector (For IT communication)
TH1: Thermistor for outdoor air (See Table 1.)	CN10: Connector (Fan motor)	SW11: Address setting rotary switch (ones digit)
TH2: Thermistor for return air (See Table 1.)	CN17: Connector (Fan speed 1/2/3/4)	SW12: Address setting rotary switch (tens digit)
SW2, 5: Switch (Function selection)	CN14: Connector	LED1: Inspection indicator lamp
SW6: Switch (Model selection)	CN114: Connector	LED2: M-NET indicator lamp
TM1: Terminal block (Power supply)	CN19: Connector	LED3: Remote controller power supply indicator lamp
TM2: Terminal block (External control input)	CN119: Connector	LED4, LED6: Power supply indicator lamp
TM3: Terminal block (Monitor output)	CN21: Connector	LED5: CO_2 sensor power supply indicator lamp (When the CO_2 sensor is connected)
TM4: Terminal block (Remote controller transmission cable)	CN121: Connector	SYMBOL ◎ ▣ : Terminal block, ▣ : Connector on PCB
TB5: Terminal block (M-NET transmission cable)	CN23: Connector (CO_2 sensor power supply)	
TAB1, TAB2: Connector (Power supply)	CN26: Connector (Bypass switching/CO_2 sensor input)	
X11: Relay contact	CN32: Connector (Remote control selection)	

Select proper isolator according to the electrical current information in the chart below.

Model	TLGHF0940RVXT02A/LGH-F940RVXT2-E	TLGHF1200RVXT02A/LGH-F1200RVXT2-E	TLGHF1500RVXT02A/LGH-F1500RVXT2-E
Maximum current when operating [A]	3.2	4.8	6.2

* Make sure that the current leakage breaker is one compatible with higher harmonics.
* Always use a current leakage breaker that is compatible with higher harmonics as this unit is equipped with an inverter.
* The use of an inadequate breaker can cause the incorrect operation of the inverter.

5. Circuit board diagrams

● Circuit board diagrams and check points

(1) Control circuit board

Caution:
Before servicing (including replacing the circuit boards), be sure to turn off the power supply isolator and check that all the LEDs on the control circuit board and power circuit board are not lit. A large-capacity electrolytic capacitor on the circuit board may carry voltage for several minutes after the isolator is turned off.

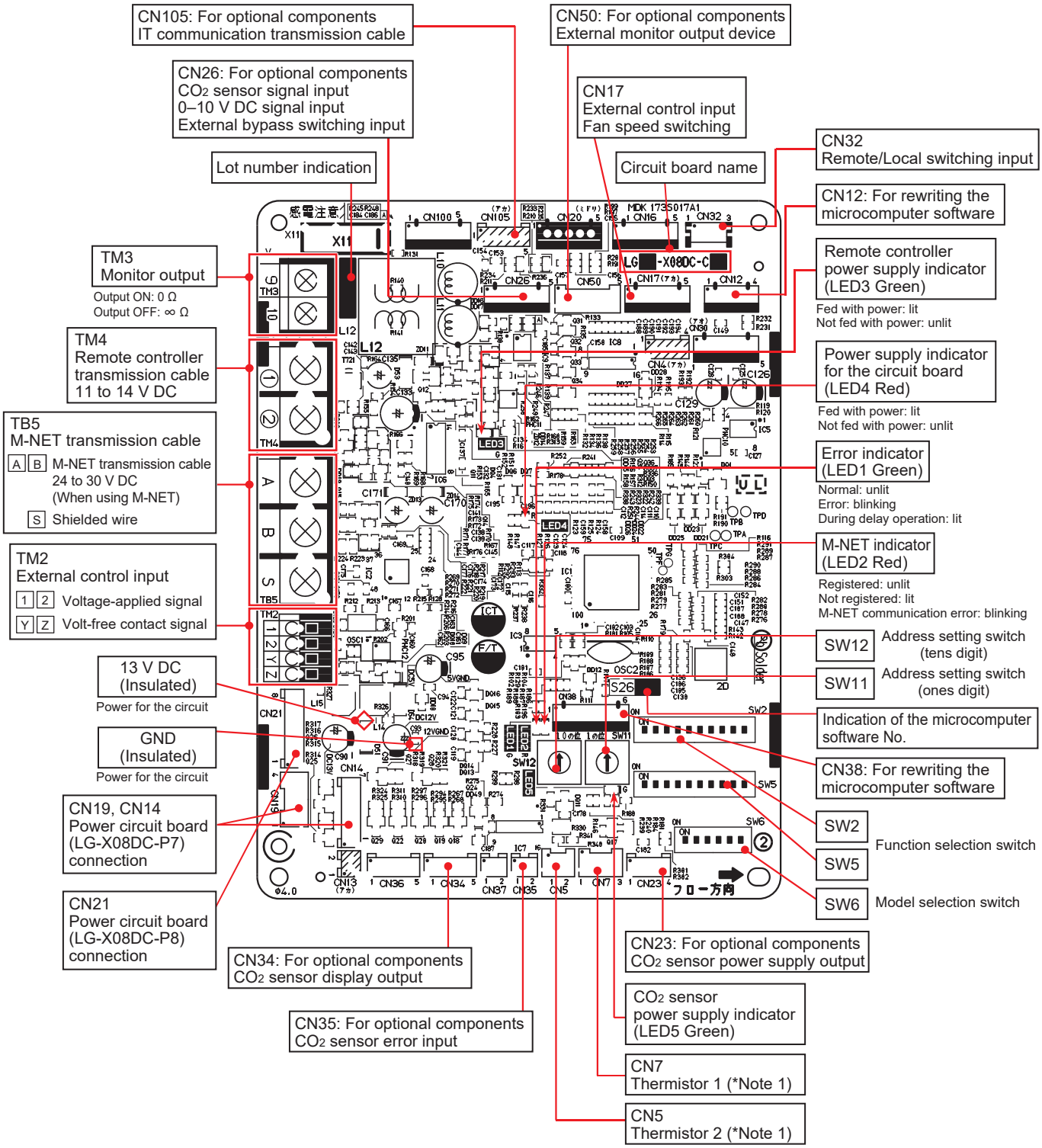

*Note 1:
See Table 1 (page 9).

(2) Power circuit board

The Lossnay units (TLGHF0940RVXT02A/LGH-F940RVXT2-E, TLGHF1200RVXT02A/LGH-F1200RVXT2-E, and TLGHF1500RVXT02A/LGH-F1500RVXT2-E) are equipped with two types of the power circuit board (LG-X08DC-P7 and LG-X08DC-P8).

Caution:
The power circuit consists of live parts. The power circuit board is not insulated from the power line, except for the connection part with the control circuit board. Before servicing (including replacing the circuit boards), be sure to turn off the power supply isolator and check that all the LEDs on the control circuit board and power circuit board are not lit. A large-capacity electrolytic capacitor on the circuit board may carry voltage for several minutes after the isolator is turned off.

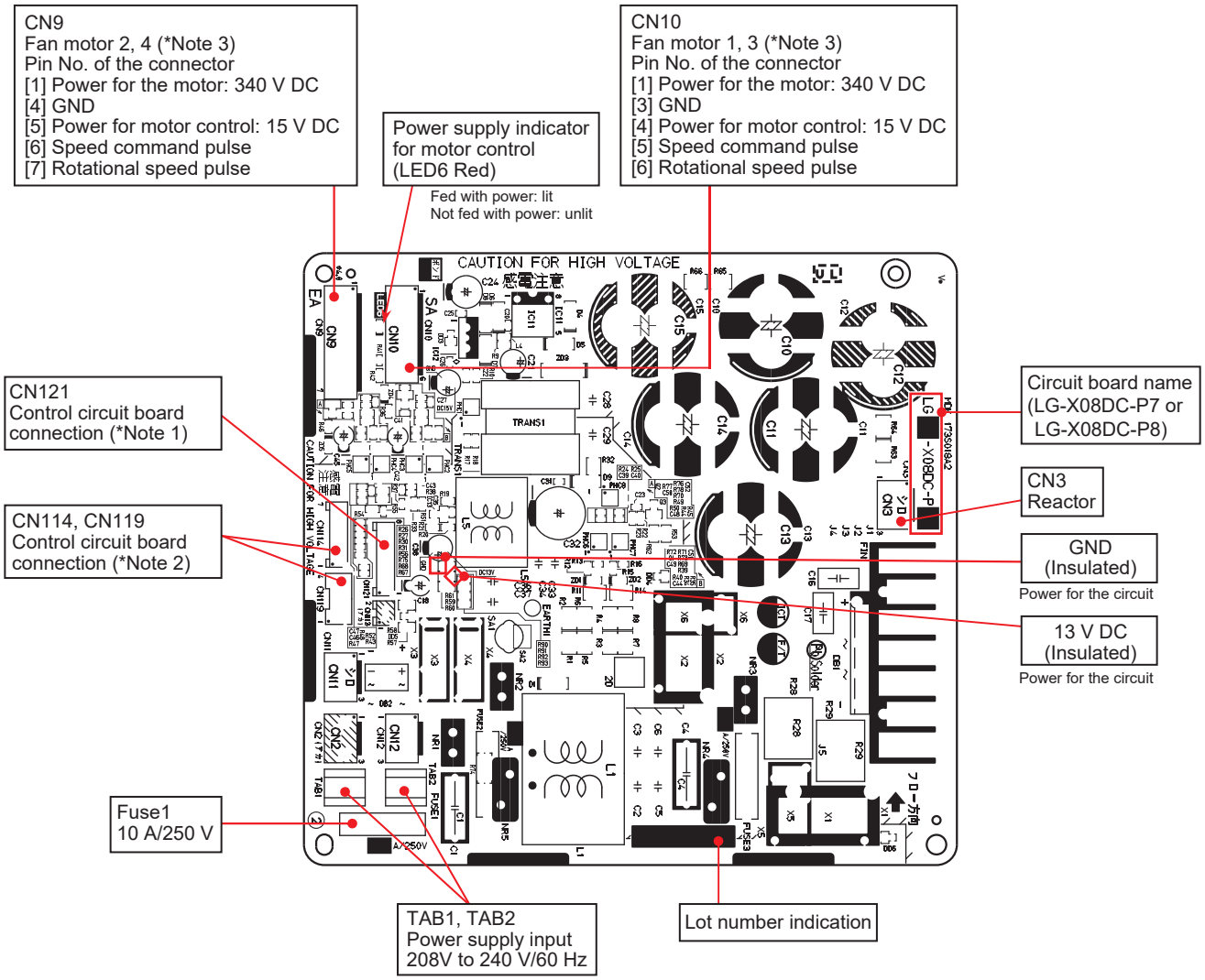

*Note 1:
The connection is only used on LG-X08DC-P8.

*Note 2:
The connections are only used on LG-X08DC-P7.

*Note 3:
See Table 1 (page 9).

6. Troubleshooting

■ Work precautions

- Before starting the service, the power supply isolator must be turned off. Pay sufficient attention to avoid electric shock or injury.
- When removing or touching the cables, circuit boards or other parts, be sure to turn off the power supply isolator.
- Even after the power supply isolator is turned off, the capacitor on the circuit board retains high voltage for a while. Therefore, before servicing, wait for at least five minutes, and then use a tester to check that the voltage has dropped.
- Once the power supply is turned off, be sure to wait for at least five minutes before turning the power back on again.
- When servicing, power supply to M-NET must be turned off. Live-line working may cause a circuit board failure.
- When servicing, recreate the malfunction two or three times before starting repairs.
- When servicing, always keep proper footing.
- When disconnecting the motor connectors, make sure that the power supply is turned off. Even when the fan motor is stopped, disconnecting the live-line connectors will cause a motor malfunction.
- When removing the circuit board, always hold it at both ends and remove carefully in order not to apply force to the surface mounted parts.
- When removing the circuit board, be careful of the metal edges on the board.
- When removing or inserting the connectors for the circuit board, hold the entire housing section. Never pull on the lead wires.
- When circuit board failure is considered to be a cause, check closely for any broken section on the copper foil patterns, burning or discoloration of parts.
- If the circuit board is replaced, make sure that the switch settings on the new board are the same as the old board.
- Be sure to connect the power supply wires correctly.
- When carrying out wiring, power supply to M-NET must be turned off, otherwise it will cause a malfunction.

6-1 Service flowchart

After checking the check items below, follow the troubleshooting for servicing.

Applicable Device	Applicable Model
Lossnay Energy Recovery Ventilator	TLGHF0940RVXT02A, TLGHF1200RVXT02A, TLGHF1500RVXT02A LGH-F940RVXT2-E, LGH-F1200RVXT2-E, LGH-F1500RVXT2-E
Lossnay Remote Controller	TZ-62DR-EA, PZ-62DR-EA, PZ-43SMF-E

No.	Preliminary check item	Details
1	Product information	• Model name of the product • Serial number of the product, manufacturing lot number of the circuit board • Microcomputer software version marked on the circuit board
2	Fault status	• Fault status (For example, the fan does not operate.) • Error code display on the remote controller • Operation setting of the remote controller (ventilation mode setting, fan speed setting, etc.)
3	Frequency of fault occurrence	• Frequency of fault occurrence (frequency of date and time of occurrence, regularity of occurrence, etc.) • Operating time up to fault occurrence • Date of start of use, date of fault occurrence
4	Timing of fault occurrence	• Remote controller operation performed before fault occurrence • Operating status, etc.
5	System settings	• Function selection switch settings and address setting of the product • Model name and address setting of the Lossnay remote controller or system controller, etc. • Function settings on TZ-62DR-EA/PZ-62DR-EA when TZ-62DR-EA/PZ-62DR-EA is used
6	System drawings	• System Configuration • Wiring • Record of the Lossnay function setting statuses

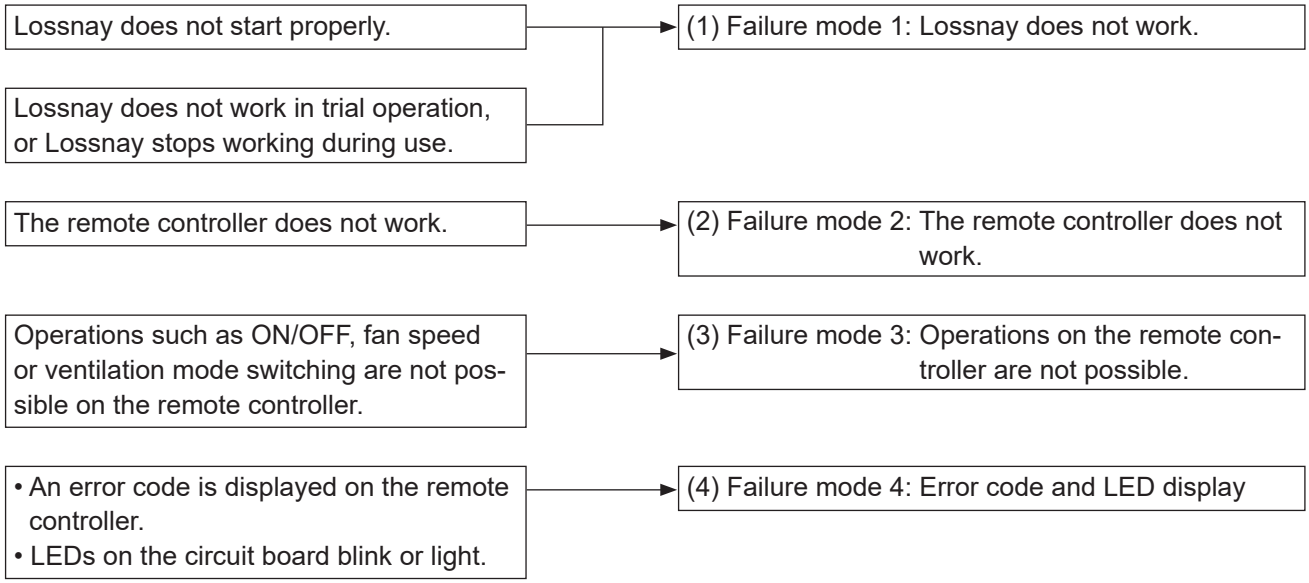

6-2 Check details

(1) Failure mode 1: Lossnay does not work.

● **Initial Check Items**

Check the following details if Lossnay does not work.

[1] Power supply

No.	Check Item	Corrective action
1	Is the main power supply on?	Turn the main power supply on.
2	Is the current capacity of the power supply isolator appropriate?	Use an appropriate power supply isolator.
3	Is the designated cable used for the power supply cable?	Use the designated cable.
4	Is the specified power supply supplied to the power supply terminal (TM1)? 208-240 V /60 Hz	Supply the specified power supply.
5	Is the power supply cable incorrectly wired, is there a faulty connection or are screws loose?	Connect the cable securely and correctly, and tighten the screws firmly.
6	Is there a faulty connection on the power supply terminals (TM1, TAB1, and TAB2)?	Connect the lead wires securely.
7	Is there a faulty connection to the reactor?	Connect the lead wires securely.
8	Are the power supply indicator lamps (LED4 on the control circuit board and LED6 on the power circuit boards, red) lit?	The LED lights while power is supplied. If not lit, check the above items.

[2] Transmission cables (remote controller transmission cable, M-NET transmission cable, external input/output signal cable, and connection cable for IT communication appliances)

No.	Check Item	Corrective action
1	Are the designated cables used for the remote controller transmission cable and M-NET transmission cable? (See Table 2-1 and Table 2-2.)	Use the designated transmission cables.
2	Are the designated cables used for the external input/output signal cable? (See Table 2-3.)	Use the designated cables.
3	Are the transmission cables wired using multicore cables?	Use the designated transmission cables.
4	Are multiple transmission cables wired in the same piping duct?	Wire the transmission cable away from one another.
5	Is the power supply cable wired at least 2 in. (5 cm) away from transmission cables?	Wire the power supply cable at least 2 in. (5 cm) away from the transmission cables.
6	Are the transmission cables connected to the designated terminal block? (See Table 2-1 and Table 2-2.)	Connect the transmission cables to the designated terminal blocks.
7	Are the transmission cables incorrectly wired, is there a faulty connection or are screws loose?	Connect the cable securely and correctly, and tighten the screws firmly.
8	Is the wiring length of the transmission cable within the regulations? (See Table 2-1 and Table 2-2.)	Wire the cables within the regulations.
9	Are communication cables wired at least 2 in. (5 cm) away from the other communication cables?	Wire the cables at least 2 in. (5 cm) away from the other cables.
10	Does the external input signal match the specifications? (See Table 2-3.)	Input the signal that matches the specifications.
11	Is the external input signal input to the Lossnay set as the main Lossnay?	Input the signal to the Lossnay set as the main Lossnay (with address number 1 or the smallest number other than 0).

Table 2-1
M-NET transmission cable specifications

Cable	M-NET transmission cable
Type	Shielded cable CVVS, CPEVS
Number of cores	2-core cable
Cable diameter	1.25 mm^2 (AWG 16)
Max. extension (Note 1)	219 yd. (200 m)
Total extension (Note 2)	547 yd. (500 m)
Terminal block	TB5 [A] [B]

(Note 1) Distance from the power supply unit to the furthest unit or system controller
(Note 2) Overall length of the cable between the units and the system controllers

Table 2-2
Remote controller transmission cable specifications

Cable	TZ-62DR-EA/PZ-62DR-EA or PZ-43SMF-E transmission cable
Type	Sheathed cable
Number of cores	2-core cable
Cable diameter	0.3 mm^2 (AWG 22)
Total extension	219 yd. (200 m)
Terminal block	TM4 [1] [2]

Table 2-3 External input/output specifications

Function Name	Terminal or connector on the circuit board	Signal specifications	Materials Used	Total extension
External control input (volt-free contact) (Note 4)	TM2 [Y] [Z]	Level/pulse (Note 1)	Twisted lead 0.5 mm^2 (AWG 20) to 1.5 mm^2 (AWG 15)	547 yd. (500 m)
External control input (12 V DC, 24 V DC) (Note 4)	TM2 [1] [2]	Level/pulse (Note 1)	Twisted lead 0.5 mm^2 (AWG 20) to 1.5 mm^2 (AWG 15)	(Note 2)
Mr. Slim indoor unit control signal	TM2 [1] [2]	Serial signal	Slim-Lossnay connection cable (Accessory parts) 0.5 mm^2 (AWG 20) to 1.5 mm^2 (AWG 15) sheathed PVC cable	55 yd. (50 m)
Remote/local switching (Note 4)	CN32 [1] [3]	Level (Volt-free contact)	Remote ON/OFF adaptor (PAC-SE55RA-E or PAC-715AD)	11 yd. (10 m)
Remote ON/OFF input (Note 4)	CN32 [1] [2]			
Fan speed 4 input (volt-free contact) (Note 3)	CN17 [1] [2]	Level (Volt-free contact)	Remote display adaptor (PAC-SA88HA-E or PAC-725AD)	
Fan speed 3 input (volt-free contact) (Note 3)	CN17 [1] [3]			
Fan speed 2 input (volt-free contact) (Note 3)	CN17 [1] [4]			
Fan speed 1 input (volt-free contact) (Note 3)	CN17 [1] [5]			
Bypass mode input (volt-free contact) (Note 3)	CN26 [1] [2]			
Fan speed switching input (0 to 10 V DC) (Note 3)	CN26 [4] [5]	Analog		

<Caution>

• In the group with the multiple Lossnay units, input the signals to the main Lossnay (with address number 1 or the smallest number other than 0).

(Note 1) The input signal must conform to the following specifications:

Level signal Volt-free contact, 12 V DC, 24 V DC

Pulse signal Volt-free contact, 12 V DC, 24 V DC, the duration of ON and OFF should be 200 msec. or more

In the case of relay contact input, use a relay having a contact rating of 15 V DC/0.1 A or higher and a minimum applicable load of 1 mA or less.

(Note 2) Check the specifications of the external device.

(Note 3) In the group with the multiple Lossnay units, make sure that:

• Connect the signal cables only to the main Lossnay unit when controlling the all Lossnay units together using TZ-62DR-EA/PZ-62DR-EA.

• Connect the signal cables to each Lossnay unit when controlling the Lossnay units individually without using TZ-62DR-EA/PZ-62DR-EA.

• The optional CO_2 sensor (PZ-70CSW-E, PZ-70CSD-E) cannot be used together.

(Note 4) In the group with the multiple Lossnay units, input the signal only to the main Lossnay unit (with address number 1 or the smallest number other than 0).

[3] Monitor output signal cable

No.	Check Item	Corrective action
1	Is the signal cable wired by multicore cable?	Wire the cable using a 2-core cable.
2	Are the signal cables and transmission cables wired in the same piping duct?	Wire the signal cables away from the transmission cables.
3	Is the power supply cable wired at least 2 in. (5 cm) away from signal cables?	Wire the power supply cable at least 2 in. (5 cm) away from the signal cables.
4	Is the signal cable connected to the designated terminal block? (See Table 3-1.)	Connect the signal cable to the designated terminal block.
5	Is the signal cable incorrectly wired, is there a faulty connection or are screws loose?	Connect the cable securely and correctly, and tighten the screws firmly.
6	Is the output capacity of the signal cable within rating? (See Table 3-1.)	Use the signal cable within rating.
7	Is the function selection for the external output signal set correctly?	Set the function selection switches (SW5-1 and 5-2) on the circuit board correctly, or set the function settings (No. 12 to 16) of TZ-62DR-EA/PZ-62DR-EA correctly.

Table 3-1 Monitor output specifications

Terminal block	TM3 [9] [10]
Function Name	Operation monitor (Factory default setting) (Note 1)
Signal specifications	Volt-free contact
Output rating	240 V AC, 1 A
	24 V DC, 1 A
Min. applicable load	208 V AC, 100 mA
	5 V DC, 100 mA

(Note 1) Output can be changed with function settings.

[4] Function setting

No.	Check Item	Corrective action
1	Is the main Lossnay (and its address setting) set correctly?	Check the address setting switches (SW11, SW12) on the circuit board. When controlling with external input signals without connecting to MELANS, set one of the units in the group as the main Lossnay (with address number 1 or the smallest number other than 0). Connect the signal cables to the main Lossnay unit.
2	Are the function selection switches on the circuit board set correctly to suit the required application?	Set the function selection switches (SW2, SW5) on the circuit board correctly.
3	Is the applicable model used as the Lossnay remote controller?	Use TZ-62DR-EA/PZ-62DR-EA. (The air conditioner remote controller including PAR-40MAA cannot be used.)
4	When TZ-62DR-EA/PZ-62DR-EA is used, are the function selections set correctly to suit the required application?	Set the function selections correctly. After setting the functions with TZ-62DR-EA/PZ-62DR-EA, operating the model selection switch (SW6) or address setting switches (SW11, SW12) on the control circuit board resets the settings to the initial settings.
5	For a function that can be set with both TZ-62DR-EA/PZ-62DR-EA and the function selection switches on the control circuit board, was the function set with the function selection switches after the function is set with TZ-62DR-EA/PZ-62DR-EA?	Set the function again with TZ-62DR-EA/PZ-62DR-EA. For the function that can be set with both TZ-62DR-EA/PZ-62DR-EA and the function selection switches, after the function was set with TZ-62DR-EA/PZ-62DR-EA, setting with the function selection switches is disabled.

[5] LED Indications on the circuit boards

No.	LED	Contents	Check Item	Corrective action
1	LED1 (green)	Lossnay unit error indicator	Blinking: Starting up, error occurred	In the case of an error, see Failure Mode 4.
			Lit: During delay operation	Lossnay operates after the delay time has passed.
			Unlit: Other than above	It is normal.
2	LED2 (red)	M-NET System error indicator	Blinking: Error occurred	See Failure Mode 4.
			Lit: No M-NET connection information	When not using M-NET, it is normal. When using M-NET, perform group registration with the system controller.
			Unlit: Other than above	It is normal.
3	LED3 (green)	Remote controller power supply indicator	Lit: Power is supplied to the remote controller (Main Lossnay).	The LED goes out when power is supplied to the remote controller from other Lossnay units in a group with multiple Lossnay units.
			Unlit: Power is not supplied to the remote controller (Sub Lossnay).	
4	LED4 (red)	Power supply indicator (control circuit board)	Check that this LED is lit.	The LED lights while power is supplied to the control circuit board. (Do not touch the circuit board when the LED is lit to avoid electric shock.)
5	LED5 (green)	CO_2 sensor power supply indicator	Lit: Power is supplied to the CO_2 sensor when PZ-70CSW-E or PZ-70CSD-E is connected.	If the LED is not lit when PZ-70CSW-E or PZ-70CSD-E is connected, set the function setting (No. 66: CO_2 sensor or BMS setting) of TZ-62DR-EA/ PZ-62DR-EA to “5: PZ-70CSW-E” or “7: PZ-70CSD-E”.
			Unlit: Power is not supplied to the CO_2 sensor. (PZ-70CSW-E or PZ-70CSD-E is not connected.)	
6	LED6 (red)	Power supply indicator (power circuit board)	Check that this LED is lit.	The LED lights while power is supplied to the power circuit board. (Do not touch the circuit board when the LED is lit to avoid electric shock.)

● **Individual function check items**

[6] If Lossnay does not work in the trial operation, or if Lossnay stops working during use, check the following items.

No.	Problem	Factor	Corrective action
1	The fan does not operate even though the trial operation switch (SW2-1) on the circuit board is turned ON.	The connectors between the fan motor and circuit board are disconnected.	Check the connector (CN9) for the fan motor 2 or 4 and the connector (CN10) for the fan motor 1 or 3 . *Before connecting or disconnecting the motor connectors (CN9, CN10), turn off the power supply isolator, and check that the all LEDs on the circuit board are not lit.
		The connectors between the control circuit board and power circuit board are disconnected.	Check the connector connections. Control circuit board: CN14, CN19, CN21 Power circuit board: CN114, CN119, CN121
		Fan motor failure	If the fan can be turned manually, replace the DC motor of the fan. Check the resistance between the motor leads. (See (6) Motor resistance table (page 42).) If the measured value is significantly different from the values specified in the table, replace the DC motor of the fan.
		When the leader-follower function is set, the switch settings for the leader and follower units are incorrect.	For the leader unit, set the function selection switch (SW5-4) to ON. For the follower units, set the function selection switch (SW5-5) to ON.
		Circuit board failure	If LEDs6 located between CN9 and CN10 on the power circuit boards are not lit, check power supply to TAB1 and TAB2. If no error is found with power supply, replace the power circuit board. If the problem persists, replace the DC motor of the fan.
		Power with the rated voltage is not supplied to the product.	Check the power supply voltage.
		The connector (CN3) is disconnected.	Check the connector connections. Power circuit board: CN3
2	Though the remote controller display indicates the fan is running, the fan stops by itself.	The Lossnay unit is operating in the protective mode (intermittent operation).	When TZ-62DR-EA/PZ-62DR-EA is used, it displays the icon “ ” that indicates the protective operation is in-progress. For details, see the Lossnay Operating/Installation Instructions or TZ-62DR-EA/PZ-62DR-EA Instruction Book.
		The Lossnay unit is set to the delay operation.	When TZ-62DR-EA/PZ-62DR-EA is used, it displays the icon “ ” that indicates the delay operation is in-progress. LED1 (green) on the control circuit board lights. Lossnay operates in 30 minutes (or 15 minutes) after the interlocked air conditioner is operated to run. Check the function selection switch (SW2-3) on the circuit board or the function setting (No. 9) of TZ-62DR-EA/PZ-62DR-EA.
		The interlocked air conditioner (Mr. Slim indoor unit or City Multi indoor unit) is stopped due to defrosting.	The supply fan has been stopped to prevent cold air from blowing out. When the air conditioner starts operating, the fan operation is started automatically.

No.	Problem	Factor	Corrective action
2	Though the remote controller display indicates the fan is running, the fan stops by itself.	Wiring for the three-phase power supply is incorrect, or the power wires are disconnected. (Open phase)	Check the power wires for the three-phase power supply.
		Wiring for the reactors is disconnected.	Check the wiring for the reactors.
3	[When wall-mounted type CO_2 sensor PZ-70CSW-E is used] The LED display lamps of the CO_2 sensor do not light even though the trial operation switch (SW2-1) on the Lossnay circuit board is turned ON.	CO_2 sensor setting is set incorrectly.	Check the setting. • When the function setting (No. 66) of TZ-62DR-EA/PZ-62DR-EA is set to “0”, the function selection switches (SW5-6 to SW5-8) on the Lossnay circuit board should be: SW5-6 ON, SW5-7 OFF, SW5-8 OFF • When the function setting (No. 66) of TZ-62DR-EA/PZ-62DR-EA is set to other than “0”, set it to “5”.
		The connectors between the LED circuit board (of the CO_2 sensor) and control circuit board (of the Lossnay unit) are disconnected.	Check the connector connections. LED circuit board: CN100 Control circuit board: CN34 For details about the CO_2 sensor PZ-70CSW-E, see its Installation and Instruction Manual.
		The lead wires connecting the LED circuit board (of the CO_2 sensor) and control circuit board (of the Lossnay unit) are broken.	Measure the voltage between the pins of connector (CN100) with the trial operation switch (SW2-1) ON. When the values shown below are detected, the lead wires are not broken. • Between the pins 1 and 2 of CN100, voltage is applied in a cycle of 20-second 0 V and 10-second 12 V DC. • Between the pins 1 and 3 of CN100, voltage is applied in a cycle of 20-second 0 V and 10-second 12 V DC. • Between the pins 1 and 4 of CN100, voltage is applied in a cycle of 20-second 0 V and 10-second 12 V DC. When extending the CO_2 sensor wiring cables, check that they are properly connected. For details about the CO_2 sensor PZ-70CSW-E, see its Installation and Instruction Manual.
		LED circuit board failure	If the problem persists, replace the wall-mounted type CO_2 sensor. For details about the CO_2 sensor PZ-70CSW-E, see its Installation and Instruction Manual.
		When the leader-follower function is set, a CO_2 sensor is connected to the follower unit.	Connect the CO_2 sensor to the leader unit.

No.	Problem	Factor	Corrective action
4	[When wall-mounted type CO_2 sensor PZ-70CSW-E is used] CO_2 concentration display of TZ-62DR-EA/ PZ-62DR-EA does not change even though the number of persons in a room is changed.	Ventilation air volume by the Lossnay unit is large enough or too small against the change in the number of persons in a room.	In this case, CO_2 concentration displayed value may be always low or high.
		The lead wires connecting the CO_2 sensor circuit board and Lossnay control circuit board are broken.	If the lead wire to pin 3 of the connector on the CO_2 sensor circuit board is broken, detected CO_2 concentration value may be fixed. When extending the CO_2 sensor wiring cables, check that they are properly connected. For details about the CO_2 sensor PZ-70CSW-E, see its Installation and Instruction Manual.
		The lead wires connecting the LED circuit board (of the CO_2 sensor) and control circuit board (of the Lossnay unit) are broken.	Check the connector connections. LED circuit board: CN100 Control circuit board: CN34 When extending the CO_2 sensor wiring cables, check that they are properly connected. For details about the CO_2 sensor PZ-70CSW-E, see its Installation and Instruction Manual.
5	The fan does not stop even though the remote controller is operated to stop operation.	The pre-heater or operation monitor with delay operation is set to be used.	If the pre-heater or operation monitor with delay operation is set to be used, the fan continues operating for three minutes after the stop operation. Check the function settings (No. 12 to 16) of TZ-62DR-EA/PZ-62DR-EA. (See the Lossnay Operating/Installation Instructions or TZ-62DR-EA/ PZ-62DR-EA Instruction Book.)
6	Even though the remote controller is operated to change the fan speed, the fan speed does not change.	The indoor negative pressure setting or the indoor positive pressure setting is set.	Check the function selection switches (SW2-4 and SW2-5) on the circuit board or the function settings (No. 6 and 7) of TZ-62DR-EA/PZ-62DR-EA. (See the Lossnay Operating/Installation Instructions or TZ-62DR-EA/PZ-62DR-EA Instruction Book.)
		The external fan speed input is set. (CN17)	When TZ-62DR-EA/PZ-62DR-EA is used, it displays the icon “ ”. Check the fan speed switching input (CN17).
		The external fan speed input is set. (CN26)	When TZ-62DR-EA/PZ-62DR-EA is used, it displays the icon “ ”. Check the function selection switches (SW5-6, SW5-7, and SW5-8) on the circuit board or the function setting (No. 66) of TZ-62DR-EA/PZ-62DR-EA. (See the Lossnay Operating/Installation Instructions or TZ-62DR-EA/PZ-62DR-EA Instruction Book.)
		The system is operating in the protective mode (intermittent operation).	When TZ-62DR-EA/PZ-62DR-EA is used, it displays the icon “ ” that indicates the protective operation is in-progress. For details, see the Lossnay Operating/Installation Instructions or TZ-62DR-EA/PZ-62DR-EA Instruction Book.
		Airflow setting is performed with TZ-62DR-EA/ PZ-62DR-EA.	Check the “Airflow” screen or the function settings (No. 73 to 78, 87, and 88) of TZ-62DR-EA/ PZ-62DR-EA. (See the Lossnay Operating/Installation Instructions or TZ-62DR-EA/PZ-62DR-EA Instruction Book.)

No.	Problem	Factor	Corrective action
7	The fan operation is unstable.	The motor rotation speed is under control.	This product controls the motor by detecting the motor rotation speed. The fan operation may be unstable during rotation speed control (for maximum about 10 minutes).
8	Air volume is abnormally large or small.	The model selection switch (SW6) is not set correctly after the circuit board is replaced.	Make the SW6 setting appropriate for the model. (See Chapter 7. (14) Setting status record (page 56).)
9	Even though the remote controller is operated to change the ventilation mode, the ventilation mode is not changed.	The outdoor temperature is 46.4°F (8°C) or lower.	When the outdoor temperature is 46.4°F (8°C) or lower, the ventilation mode is fixed to the Energy recovery operation (Lossnay mode).
		The signal is input to the Bypass mode switching input (CN26 [1] [2]).	Check the Bypass mode switching input (CN26 [1] [2]). (See the Lossnay Operating/Installation Instructions or TZ-62DR-EA/PZ-62DR-EA Instruction Book.)
		The Lossnay unit is performing the Night-purge operation.	When TZ-62DR-EA/PZ-62DR-EA is used, the ventilation mode cannot be changed during the Night-purge operation. (See the Lossnay Operating/Installation Instructions or TZ-62DR-EA/PZ-62DR-EA Instruction Book.)
		The pre-heater is ON, or within one hour after the pre-heater is turned OFF.	When the pre-heater is ON, or for one hour after the pre-heater is turned OFF, the ventilation mode is fixed to the Energy recovery operation (Lossnay mode).
10	The ventilation mode cannot be switched when Lossnay is operating in the automatic mode.	Temperature condition for Lossnay mode or Bypass mode is not satisfied.	Check the temperature map. For details, see the Lossnay Operating/Installation Instructions or TZ-62DR-EA/PZ-62DR-EA Instruction Book.
		It has not passed 30 minutes since the ventilation mode is switched.	Switching of the ventilation mode is controlled in 30 minutes cycle.
		The outdoor temperature is 46.4°F (8°C) or lower.	When the outdoor temperature is 46.4°F (8°C) or lower, the ventilation mode is fixed to the Energy recovery operation (Lossnay mode).
		The signal is input to the Bypass mode switching input (CN26 [1] [2]).	Check the Bypass mode switching input (CN26 [1] [2]). (See the Lossnay Operating/Installation Instructions or TZ-62DR-EA/PZ-62DR-EA Instruction Book.)
		The operation mode of the interlocked air conditioner (Mr. Slim indoor unit or City Multi indoor unit) is set to fan operation or heating.	If the operation mode of the interlocked air conditioner is fan operation or heating, the ventilation mode of Lossnay is fixed to the Energy recovery operation (Lossnay mode).
		The pre-heater is ON, or within one hour after the pre-heater is turned OFF.	When the pre-heater is ON, or for one hour after the pre-heater is turned OFF, the ventilation mode is fixed to the Energy recovery operation (Lossnay mode).
		Lossnay is operating at the air flow of 75% or more.	When the air flow is 75% or more, the ventilation mode is fixed to the Energy recovery operation (Lossnay mode).

No.	Problem	Factor	Corrective action
11	Air volume is too small.	Is the air filter clogged?	Clean the air filter.
		Pressure loss in the duct is too high.	Set the supply/exhaust fan power up setting. (See the Lossnay Operating/Installation Instructions or TZ-62DR-EA/PZ-62DR-EA Instruction Book.)
		The model selection switch (SW6) is not set correctly after the circuit board is replaced.	Make the SW6 setting appropriate for the model. (See Chapter 7. (14) Setting status record (page 56).)
		The indoor negative pressure setting or the indoor positive pressure setting is set.	Check the function selection switches (SW2-4 and SW2-5) on the circuit board or the function settings (No. 6 and 7) of TZ-62DR-EA/PZ-62DR-EA. (See the Lossnay Operating/Installation Instructions or TZ-62DR-EA/PZ-62DR-EA Instruction Book.)
		Power supply voltage is low.	Check the power supply voltage.
		In interlock with the air conditioner, the outdoor air intake port of the Lossnay unit is connected with the air conditioner by using a duct.	In this case, even if the Lossnay remote controller is operated to start Lossnay while the air conditioner is stopped, Lossnay will not supply air.
		Airflow setting is performed with TZ-62DR-EA/PZ-62DR-EA.	Check the “Airflow” screen or the function settings (No. 73 to 78, 87, and 88) of TZ-62DR-EA/PZ-62DR-EA. (See the Lossnay Operating/Installation Instructions or TZ-62DR-EA/PZ-62DR-EA Instruction Book.)
		When the constant pressure control is used, Lossnay is not operating properly.	Check the pressure sensors and their wiring.
		Function setting (No. 35) of TZ-62DR-EA/PZ-62DR-EA “Maximum air flow setting in bypass operation” is set to 1: 50% or less.	In bypass operation, the maximum air flow is limited to 50%.
12	Air volume is too large.	When the constant pressure control is used, Lossnay is not operating properly.	Check the pressure sensors and their wiring.
13	Actual fan speed of the Lossnay unit differs from the fan speed set with the remote controller.	The signal is input to the fan speed input (CN17).	Check the fan speed input (CN17). (See the Lossnay Operating/Installation Instructions or TZ-62DR-EA/PZ-62DR-EA Instruction Book.)
		The signal (0 to 10 V DC) is input to the fan speed switching input (CN26 [4] [5]).	Check the fan speed switching input (CN26 [4] [5]). (See the Lossnay Operating/Installation Instructions or TZ-62DR-EA/PZ-62DR-EA Instruction Book.)
		Function setting (No. 8) of TZ-62DR-EA/PZ-62DR-EA “Max. fan speed setting during the first 30 minutes” is enabled.	Lossnay operates at maximum fan speed for 30 minutes when operation starts. While this function is working, the icon “ ” and selected fan speed are displayed on the screen of TZ-62DR-EA/PZ-62DR-EA. (See the Lossnay Operating/Installation Instructions or TZ-62DR-EA/PZ-62DR-EA Instruction Book.)
		The indoor negative pressure setting or the indoor positive pressure setting is set.	Check the function selection switches (SW2-4 and SW2-5) on the circuit board or the function settings (No. 6 and 7) of TZ-62DR-EA/PZ-62DR-EA. (See the Lossnay Operating/Installation Instructions or TZ-62DR-EA/PZ-62DR-EA Instruction Book.)

No.	Problem	Factor	Corrective action
14	The Night-purge operation cannot be stopped with TZ-62DR-EA/ PZ-62DR-EA.	Usual ON/OFF button operation cannot stop the Night-purge operation.	Press the ON/OFF button once to display the operation screen, and then press the ON/OFF button again.
15	Even though the Night-purge is set, Lossnay does not perform the Night-purge operation.	Conditions of the Night-purge are not satisfied.	When the Night-purge conditions such as the indoor/outdoor temperature are not satisfied, Lossnay does not perform the Night-purge operation. For details, see the Lossnay Operating/Installation Instructions or TZ-62DR-EA/PZ-62DR-EA Instruction Book.
		The Night-purge schedule is not set.	Check the setting of TZ-62DR-EA/PZ-62DR-EA or the system controller that supports Night-purge operation. For details, see the Lossnay Operating/Installation Instructions or TZ-62DR-EA/PZ-62DR-EA Instruction Book.
16	The Night-purge operation stops in halfway through.	The operating condition became outside the Night-purge conditions.	When the operating condition becomes outside the Night-purge conditions, the Night-purge operation ends. For details, see the Lossnay Operating/Installation Instructions or TZ-62DR-EA/PZ-62DR-EA Instruction Book.
		The Lossnay remote controller or the system controller was operated to start or stop the operation of the Lossnay unit.	When the start or stop operation is performed during the Night-purge operation, the Night-purge operation ends.
		A controller other than TZ-62DR-EA/PZ-62DR-EA or a controller that is not supporting Night-purge is operated to change the ventilation mode.	When a controller other than those supporting Night-purge is operated to change the ventilation mode, the system performs the normal ventilating operation. (See the Lossnay Operating/Installation Instructions or TZ-62DR-EA/PZ-62DR-EA Instruction Book.)
17	Air volume is small during Night-purge operation.	The maximum air flow during Night-purge operation is approx. 70%.	This is not a malfunction.
18	The Lossnay unit does not operate with the MELCloud application. (When the Wi-Fi interface is used)	The connection cable for the Wi-Fi interface is too close to the power supply cable or the other communication cables.	Wire the connection cable for the Wi-Fi interface at least 2 in. (5 cm) away from the power supply cable or the other communication cables.
		The system configuration is not appropriate.	Refer to the notes for the system configuration, for example, on leaflets supplied with the Lossnay unit.
		If the above does not solve the problem	Refer to the Wi-Fi interface manuals.
19	When the supply fan is stopped, the exhaust fan operates at the higher fan speed than the fan speed set with the remote controller.	The Lossnay unit is operating in the protective mode (intermittent operation). (Outdoor temperature is 23°F (-5°C) or lower.)	During the intermittent operation, the exhaust fan operates at fan speed 4.

(2) Failure mode 2: The remote controller does not work.

If the remote controller does not work, check the following items.

[1] TZ-62DR-EA/PZ-62DR-EA

No.	Problem	Factor	Corrective action
1	Nothing is displayed on the remote controller. The ON/OFF lamp does not blink.	The power of the Lossnay unit is not ON.	Check the items described in (1) [1].
		Faulty connection of the remote controller transmission cable	Check the items described in (1) [2].
		In one group, three or more TZ-62DR-EA/PZ-62DR-EA controllers are connected.	Only up to two TZ-62DR-EA/PZ-62DR-EA controllers can be connected in one group.
		In one group, 16 or more Lossnay units are connected.	Only up to 15 Lossnay units can be connected in one group.
		The wiring length of the remote controller exceeds 219 yd. (200 m).	The wiring length of the remote controller shall be within 219 yd. (200 m).
		In one group, two or more Lossnay units are set as the main Lossnay (with address number 1 or the smallest number other than 0).	Only one Lossnay unit can be set as the main Lossnay in one group.
		When the leader-follower function is set, all the Lossnay units are set as follower units.	For the leader unit, set the function selection switch (SW5-4) to ON. For the follower units, set the function selection switch (SW5-5) to ON.
2	The remote controller continues to display “Please Wait”. Error code “6831” is displayed.	The remote controller is starting up.	The remote controller displays “Please Wait” during start-up for maximum three minutes.
		Faulty connection of the remote controller transmission cable	Check the items described in (1) [2].
		The remote controller transmission cable is connected to the terminal block (TB5 [A] [B]) for the M-NET transmission cable.	Connect the remote controller transmission cable to the terminal block (TM4 [1] [2]).
		PZ-43SMF-E is used together.	TZ-62DR-EA/PZ-62DR-EA and PZ-43SMF-E cannot be used together.
		The old model remote controller (TZ-61DR-E/PZ-61DR-E) is connected.	Use the TZ-62DR-EA/PZ-62DR-EA remote controller.
3	It takes time for the remote controller to be fed with power after turning the Lossnay unit ON.	The Lossnay unit is starting up.	The remote controller is not fed with power during start-up of the Lossnay unit for maximum one minute.

[2] PZ-43SMF-E

No.	Problem	Factor	Corrective action
1	The power indicator "◉" is not displayed.	The power of the Lossnay unit is not ON.	Check the items described in (1) [1].
		Faulty connection of the remote controller transmission cable	Check the items described in (1) [2].
		In one group, three or more PZ-43SMF-E controllers are connected.	Only up to two PZ-43SMF-E controllers can be connected in one group.
		In one group, 16 or more Lossnay units are connected.	Only up to 15 Lossnay units can be connected in one group.
		The wiring length of the remote controller exceeds 219 yd. (200 m).	The wiring length of the remote controller shall be within 219 yd. (200 m).
		In one group, two or more Lossnay units are set as the main Lossnay (with address number 1 or the smallest number other than 0).	Only one Lossnay unit can be set as the main Lossnay in one group. (See the Lossnay Operating/Installation Instructions.)
2	"H0" is displayed on the remote controller.	The remote controller is starting up.	The remote controller displays "H0" during start-up for a maximum of one minute.
3	It takes time for the remote controller to be fed with power after turning the Lossnay unit ON.	The Lossnay unit is starting up.	The remote controller is not fed with power during start-up of the Lossnay unit for a maximum of one minute.
4	The inspection number "6801" is displayed on the remote controller.	Faulty connection of the remote controller transmission cable	Check the items described in (1) [2].
		The remote controller transmission cable is connected to the terminal block (TB5 [A] [B]) for the M-NET transmission cable.	Connect the remote controller transmission cable to the terminal block (TM4 [1] [2]).
		TZ-62DR-EA/PZ-62DR-EA is used together.	PZ-43SMF-E and TZ-62DR-EA/ PZ-62DR-EA cannot be used together.
5	Operations with the remote controller are not possible.	The function selection switch (SW5-9) on the circuit board is set to ON.	When PZ-43SMF-E is used, set the function selection switch (SW5-9) to OFF.
6	When the leader-follower function is set, Lossnay units are not operating properly.	When the leader-follower function is set, PZ-43SMF-E cannot be used.	Replace the remote controller with TZ-62DR-EA/PZ-62DR-EA.

(3) Failure mode 3: Operations on the remote controller are not possible.

● **Initial Check Items**

If the system cannot be operated with the remote controller, check the following items.

No.	Check item	Notes
1	Are the function selection switches (SW2, SW5) and model selection switch (SW6) on the Lossnay circuit board set correctly to suit the required application?	Depending on the settings of the function selection switches, Lossnay may automatically operate or stop, or specific operation may be unable to be performed with the remote controller.
2	When TZ-62DR-EA/PZ-62DR-EA is used, are the function selections set correctly to suit the required application?	Depending on the settings of the function selections, Lossnay may automatically operate or stop, or specific operation may be unable to be performed with the remote controller.
3	When TZ-62DR-EA/PZ-62DR-EA is used, are icons and characters displayed on the TZ-62DR-EA/PZ-62DR-EA screen?	Based on the icon and characters, you can check statuses such as the timer operation, Night-purge, and protective operation. (See the Lossnay Operating/Installation Instructions or TZ-62DR-EA/PZ-62DR-EA Instruction Book.)
4	Is the system controller of M-NET used?	The system controller can be used to start/stop Lossnay, change fan speed or ventilation mode, and prohibit the start/stop operation by TZ-62DR-EA/PZ-62DR-EA.
5	Is the external input used?	If the interlock mode is set to “External input given priority” (function setting (No. 19) is set to “3”) and if the external device is operating, the stop operation by TZ-62DR-EA/PZ-62DR-EA is prohibited. (See the Lossnay Operating/Installation Instructions or TZ-62DR-EA/PZ-62DR-EA Instruction Book.)
		If the Remote/Local switching (CN32) is set to remote, the start/stop operation by the Lossnay remote controller is prohibited. (See the Lossnay Operating/Installation Instructions or TZ-62DR-EA/PZ-62DR-EA Instruction Book.)
		Priority is given to the operation by the fan speed switching input and Bypass mode switching input. (CN17, CN26) (See the Lossnay Operating/Installation Instructions or TZ-62DR-EA/PZ-62DR-EA Instruction Book.)
6	Is the Wi-Fi interface connected?	When the Lossnay unit is operated with the MELCloud application, the Lossnay unit operates according to the latter signal.

● **Individual check items**

If the system cannot be started/stopped using the remote controller, check the following items.

[1] TZ-62DR-EA/PZ-62DR-EA

No.	Problem	Factor	Corrective action
1	Some Lossnay units in the group do not operate.	The power of the Lossnay unit is not ON.	Check the items described in (1) [1].
		Faulty connection of the remote controller transmission cable	Check the items described in (1) [2].
		The remote controller transmission cables are not correctly connected between the terminals (TM4 [1] [2]) of the Lossnay units in the group.	Connect the remote controller transmission cables correctly between the terminals (TM4 [1] [2]) of the Lossnay units in the group.
		The system is operating in the protective mode (intermittent operation).	For details, see the Lossnay Operating/Installation Instructions or TZ-62DR-EA/PZ-62DR-EA Instruction Book.
2	The screen display of the remote controller changes by itself. Even if you press the buttons, the screen returns to the original screen right away.	Faulty connection of the remote controller transmission cable	Check the items described in (1) [2].
		The group wiring and the group setting of the system controller do not match.	Check the group wiring or the group setting of the system controller.
		When the system controller is used, the Lossnay unit, which is set as the main Lossnay, is not set to the address with the smallest number in the group, or the address is duplicated.	Lossnay unit with the smallest address number in the group will be set as the main Lossnay automatically. Do not assign the same address number to the other Lossnay units.
3	The ventilation mode cannot be changed with the remote controller.	The Lossnay unit is performing the Night-purge operation.	The ventilation mode cannot be changed during the Night-purge operation. (See the Lossnay Operating/Installation Instructions or TZ-62DR-EA/PZ-62DR-EA Instruction Book.)
		The signal is input to the Bypass mode switching input (CN26 [1] [2]).	Check the Bypass mode switching input (CN26 [1] [2]). (See the Lossnay Operating/Installation Instructions or TZ-62DR-EA/PZ-62DR-EA Instruction Book.)
4	Even though the function settings (No. 37 and/or 39) of TZ-62DR-EA/PZ-62DR-EA are set to “1”, the indoor temperature and/or supply air temperature are not displayed.	The Lossnay unit is performing the Bypass mode ventilation.	The indoor temperature and/or supply air temperature are not displayed during the Bypass mode. In addition, this function is available only when “Sensor value” is set to “Yes” (Display) by the remote controller TZ-62DR-EA/PZ-62DR-EA.
5	Even though the function settings (No. 36, 37 and/or 39) of TZ-62DR-EA/PZ-62DR-EA are set to “1”, the outdoor temperature, indoor temperature and/or supply air temperature are not displayed.	The setting of TZ-62DR-EA/PZ-62DR-EA is not correct.	Select “Yes” at “Sensor value” menu of TZ-62DR-EA/PZ-62DR-EA. For details, see the Installation Manual of TZ-62DR-EA/PZ-62DR-EA.

No.	Problem	Factor	Corrective action
6	Even though the function settings (No. 36, 37 and/or 39) of TZ-62DR-EA/PZ-62DR-EA are set to “1”, “LO” or “HI” is displayed on the remote controller.	The indoor, outdoor, and/or supply air temperature are outside the display range.	• Outdoor temperature display range: 35.6°F (2°C) to 96.8°F (36°C) • Indoor temperature display range: 48.2°F (9°C) to 98.6 °F (37°C) • Calculated supply air temperature display range: 48.2°F (9°C) to 98.6 °F (37°C) If the temperature exceeds the display range, “HI” will be displayed, and if less than the display range, “LO” will be displayed.
7	CO_2 concentration is not displayed on TZ-62DR-EA/PZ-62DR-EA.	With the function setting No. 38, CO_2 concentration indication setting is set to “0: N/A”.	Set the function setting No. 38 to “1: Available on the screen of TZ-62DR-EA/PZ-62DR-EA”. (See the TZ-62DR-EA/PZ-62DR-EA Installation manual and the Lossnay Installation Instructions.)
		The detected CO_2 concentration is outside the display range.	Detectable CO_2 concentration range: 300 to 2000 ppm If the concentration exceeds 2000 ppm, “2000” will be displayed, and if less than 400 ppm, “LO” will be displayed.
		The CO_2 sensor is in warm-up operation. (For 15 minutes after power is supplied to the CO_2 sensor)	TZ-62DR-EA/PZ-62DR-EA does not display CO_2 concentration while the CO_2 sensor is in warm-up operation. (It displays “--- ppm” during warm-up operation.)

[2] Interlocking with air conditioners (Mr. Slim indoor unit or City Multi indoor unit) or external devices

No.	Problem	Factor	Corrective action
1	Lossnay interlock settings cannot be performed with the remote controller.	The power of the Lossnay unit is not ON.	Check the items described in (1) [1].
		Faulty connection of the remote controller transmission cable	Check the items described in (1) [2].
		Lossnay address setting is incorrect.	Check the Lossnay address.
2	Lossnay does not perform interlock operation.	The power of the Lossnay unit is not ON.	Check the items described in (1) [1].
		Faulty connection of the remote controller transmission cable or external input/output signal cables	Check the items described in (1) [2].
		The Lossnay unit is not set for interlock operation.	Set the interlock setting.
		The terminal block connected and the type of external signal do not match (charged or volt-free).	Check the type of external signal and the connections of the external control input terminal (TM2).
		The type of external signal and input setting do not match (level signal or pulse signal).	Check the type of external signal and the setting of the input (level or pulse). (See the Lossnay Operating/Installation Instructions or TZ-62DR-EA/PZ-62DR-EA Instruction Book.)
		The Lossnay unit is set to the delay operation.	When TZ-62DR-EA/PZ-62DR-EA is used, it displays the icon “ ” that indicates the delay operation is in-progress. LED1 (green) on the control circuit board lights. The Lossnay unit starts operation in 30 minutes (or 15 minutes) after starting operation by the air conditioner or external signal. Check the function selection switch (SW2-3) on the circuit board or the function setting (No. 9) of TZ-62DR-EA/PZ-62DR-EA. (See the Lossnay Operating/Installation Instructions or TZ-62DR-EA/PZ-62DR-EA Instruction Book.)
		The interlock mode of the Lossnay unit is set to “ON Interlock" or "OFF Interlock".	Check the interlock mode setting. (See the Lossnay Operating/Installation Instructions or TZ-62DR-EA/PZ-62DR-EA Instruction Book.)
		In a group with multiple Lossnay units, no Lossnay unit is set to the main Lossnay.	When externally controlling multiple Lossnay units without using M-NET (and address setting), set one Lossnay unit as the main Lossnay to input external control signal. (Set its address to the smallest number in the group, or set it to 1 and then set the other units address to 0.)
		In a group with multiple Lossnay units, external control signal is input to a Lossnay unit other than the main Lossnay.	
		The Lossnay unit is operating in the protective mode (intermittent operation).	For details, see the Lossnay Operating/Installation Instructions or TZ-62DR-EA/PZ-62DR-EA Instruction Book.

[3] System controller

No.	Problem	Factor	Corrective action
1	The group of Lossnay cannot be set with the system controller.	The power of the Lossnay unit is not ON.	Check the items described in (1) [1].
		M-NET transmission cable is connected to the remote controller terminal block (TM4 [1] [2]).	Connect the M-NET transmission cable to the M-NET transmission cable terminal block (TB5 [A] [B]).
		Lossnay address setting is incorrect.	Check the address setting switches (SW11 and SW12) on the Lossnay circuit board.
		Power is not supplied to the M-NET transmission cable.	If the system is configured with only Lossnay units, connect the power supply unit. (See the Lossnay Operating/Installation Instructions.)
		The wiring length of the M-NET transmission cable is longer than specified. (Longer than 219 yd. (200 m) from the power supply unit, or longer than 547 yd. (500 m) in total length)	Check the wiring length of the transmission cable. (See the Lossnay Operating/Installation Instructions.)
2	Some Lossnay units in the group do not operate.	The power of the Lossnay unit is not ON.	Check the items described in (1) [1].
		Faulty connection of the M-NET transmission cable	Check the items described in (1) [2].
		The remote controller transmission cables are not correctly connected between the terminals (TM4 [1] [2]) of the Lossnay units in the group.	Connect the remote controller transmission cables correctly between the terminals (TM4 [1] [2]) of the Lossnay units in the group.
		The Lossnay unit is operating in the protective mode (intermittent operation).	For details, see the Lossnay Operating/Installation Instructions or TZ-62DR-EA/PZ-62DR-EA Instruction Book.
3	The screen display of the system controller changes by itself. Even if you press the buttons, the screen returns to the original screen right away.	Faulty connection of the remote controller transmission cable	Check the items described in (1) [2].
		When TZ-62DR-EA/PZ-62DR-EA is used, the group wiring and the group setting of the system controller do not match.	Check the group wiring or the group setting of the system controller.
		The address of the Lossnay unit, which is set as the main Lossnay, is not set to the smallest number in the group.	Lossnay unit with the smallest address number in the group will be set as the main Lossnay automatically. Do not assign the same address number to the other Lossnay units.
4	The addresses of the follower units cannot be registered with the system controller when using the leader-follower function.	The follower units cannot be connected to M-NET.	Do not select the addresses of the follower units on the system controller screen.

[4] When the Wi-Fi interface is connected to the Lossnay unit

No.	Problem	Factor	Corrective action
1	The Lossnay unit does not operate with the MELCloud application. (When the Wi-Fi interface is used)	The connection cable for the Wi-Fi interface is too close to the power supply cable or the other communication cables.	Wire the connection cable for the Wi-Fi interface at least 2 in. (5 cm) away from the power supply cable or the other communication cables.
		The system configuration is not appropriate.	Refer to the notes for the system configuration, for example, on leaflets supplied with the Lossnay unit.
		If the above does not solve the problem	Refer to the Wi-Fi interface manuals.

(4) Failure mode 4: Error code and LED display

An error code displayed on the remote controller (TZ-62DR-EA/PZ-62DR-EA, PZ-43SMF-E) or the M-NET controller, and blinking or illumination of LED1 (green) or LED2 (red) on the circuit board show the type of an error. The LED blink interval is 0.25 seconds for both on and off. The display duration is approximately 7 seconds.

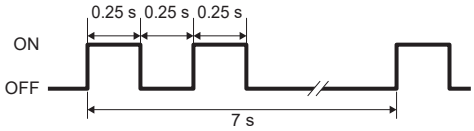

Error display example: Two blinks

Notes:
When the leader-follower function is set, multiple Lossnay units are recognized as a single system. Therefore, the system controller displays the error code using the leader unit's address. (If an error occurs in a follower unit, TZ-62DR-EA/PZ-62DR-EA displays the M-NET address of the faulty unit as '---' (no address).)
The procedure to identify the malfunctioning unit is as follows:

1. Check the address of the malfunctioning system on the system controller.
2. Check the address of the malfunctioning unit on TZ-62DR-EA/PZ-62DR-EA to identify the leader unit or follower unit.
3. If the malfunctioning unit is a follower unit, check LED1 on each follower unit's control circuit board.

Error display list

Error Code	LED1 (green)	LED2 (red)	Symptom	Cause	Corrective action
0900	—	—	Trial operation	The trial operation switch (SW2-1) on the circuit board is set to “ON”.	Check the trial operation switch. (See the Lossnay Operating/ Installation Instructions or TZ-62DR-EA/PZ-62DR-EA Instruction Book.)
3126	8 blinks	—	External device error	When the terminals (TM3 [9] [10]) or Lossnay signal output terminal PZ-4GS-E are set for pre-heater output (the function setting No. 12 of TZ-62DR-EA/PZ-62DR-EA is set to “6”, and No. 13 to 16 are set to “5”), the following conditions were satisfied. • Outdoor air temperature detected by OA thermistor stays at 158°F (70°C) or higher for one minute. • Outdoor air temperature detected by OA thermistor exceeds 59°F (15°C) within 15 minutes after the pre-heater output starts. • Outdoor air temperature is still -4˚F (-20°C) or lower 5 minutes after the pre-heater output starts. Causes of the above phenomenons are described below.	See below.
				The pre-heater is connected to the wrong terminal.	Connect the pre-heater to the terminals (TM3 [9] [10]). (See the Lossnay Operating/ Installation Instructions or TZ-62DR-EA/PZ-62DR-EA Instruction Book.)
				Faulty connection of the pre-heater	Check the pre-heater connections.
				The output capacity of the pre-heater is too large with respect to the air volume of the Lossnay unit.	Adjust the output capacity of the pre-heater. When the pre-heater is used, run the Lossnay at a higher fan speed.

Error Code	LED1 (green)	LED2 (red)	Symptom	Cause	Corrective action
3126	8 blinks	—	External device error	The output capacity of the pre-heater is too small with respect to the air volume of the Lossnay unit.	Adjust the output capacity of the pre-heater. When the pre-heater is used, run the Lossnay at a lower fan speed.
				Pre-heater failure	Replace the pre-heater.
				Pre-heater relay failure	Replace the relay for the pre-heater.
				Circuit board failure	First, replace the control circuit board. If the problem persists, then replace both power circuit boards.
4101	11 blinks	—	Overcurrent error of the remote controller terminal	Shorting between the remote controller terminals	Check the remote controller wiring.
				The group contains two or more Loss-nay units with the same address.	Set unique addresses to these units.
				M-NET transmission cable is connected to the remote controller terminal block (TM4 [1] [2]).	Connect the M-NET transmission cable to the M-NET transmission cable terminal block (TB5 [A] [B]).
				Three or more remote controllers are connected.	Up to two remote controllers can be connected.
				Circuit board failure	Replace the control circuit board.
				Remote controller failure	Replace the remote controller.
4116	1 blink	—	Abnormal rotation of the fan motor 1 (Centrifugal fan does not work, insufficient motor speed, excessive motor speed, or rotation detected when operation is stopped)	Faulty connection of the supply fan motor connector (CN10) on the power circuit board	Check the connector (CN10) connection on the power circuit board. (Lower side: LG-X08DC-P8)
				Faulty connection of the connectors (CN19–CN119) between the control circuit board and power circuit board (Upper side) (CN21–CN121) between the control circuit board and power circuit board (Lower side)	Check the connector connections (CN19–CN119) and (CN21–CN121).
				The model selection switch (SW6) is not set correctly.	Make the SW6 setting appropriate for the model. (See Chapter 7. (14) Setting status record (page 56).)
				The temperature around the product is high.	Use the product at a temperature of 104°F (40°C) or lower.
				The motor and centrifugal fan are not fixed securely.	Check the installation state of the motor and centrifugal fan, and fix them securely.
				Deformed centrifugal fan	Replace the centrifugal fan.
				Foreign objects around the centrifugal fan	Check the air course and around the centrifugal fan, and remove any foreign matter.
				Fan motor failure	Replace the DC motor. (See page 18.)
				Circuit board failure	Replace the power circuit board. (Lower side: LG-X08DC-P8)
				When operation is stopped, the fan rotates due to outside wind.	Prevent the outside wind from intruding.

Error Code	LED1 (green)	LED2 (red)	Symptom	Cause	Corrective action
4116	2 blinks	—	Abnormal rotation of the fan motor 2 (Centrifugal fan does not work, insufficient motor speed, excessive motor speed, or rotation detected when operation is stopped)	Faulty connection of the exhaust fan motor connector (CN9) on the power circuit board	Check the connector (CN9) connection on the power circuit board. (Lower side: LG-X08DC-P8)
				Faulty connection of the connectors (CN19–CN119) between the control circuit board and power circuit board (Upper side) (CN21–CN121) between the control circuit board and power circuit board (Lower side)	Check the connector connections (CN19–CN119) and (CN21–CN121).
				The model selection switch (SW6) is not set correctly.	Make the SW6 setting appropriate for the model. (See Chapter 7. (14) Setting status record (page 56).)
				The temperature around the product is high.	Use the product at a temperature of 104°F (40°C) or lower.
				The motor and centrifugal fan are not fixed securely.	Check the installation state of the motor and centrifugal fan, and fix them securely.
				Deformed centrifugal fan	Replace the centrifugal fan.
				Foreign objects around the centrifugal fan	Check the air course and around the centrifugal fan, and remove any foreign matter.
				Fan motor failure	Replace the DC motor. (See page 18.)
				Circuit board failure	Replace the power circuit board. (Lower side: LG-X08DC-P8)
				When operation is stopped, the fan rotates due to outside wind.	Prevent the outside wind from intruding.

Error Code	LED1 (green)	LED2 (red)	Symptom	Cause	Corrective action
4116	6 blinks	—	Abnormal rotation of the fan motor 3 (Centrifugal fan does not work, insufficient motor speed, excessive motor speed, or rotation detected when operation is stopped)	Faulty connection of the supply fan motor connector (CN10) on the power circuit board	Check the connector (CN10) connection on the power circuit board. (Upper side: LG-X08DC-P7)
				Faulty connection of the connectors (CN19–CN119) between the control circuit board and power circuit board (Upper side) (CN21–CN121) between the control circuit board and power circuit board (Lower side)	Check the connector connections (CN19–CN119) and (CN21–CN121).
				The model selection switch (SW6) is not set correctly.	Make the SW6 setting appropriate for the model. (See Chapter 7. (14) Setting status record (page 56).)
				The temperature around the product is high.	Use the product at a temperature of 104°F (40°C) or lower.
				The motor and centrifugal fan are not fixed securely.	Check the installation state of the motor and centrifugal fan, and fix them securely.
				Deformed centrifugal fan	Replace the centrifugal fan.
				Foreign objects around the centrifugal fan	Check the air course and around the centrifugal fan, and remove any foreign matter.
				Fan motor failure	Replace the DC motor. (See page 18.)
				Circuit board failure	Replace the power circuit board. (Upper side: LG-X08DC-P7)
				When operation is stopped, the fan rotates due to outside wind.	Prevent the outside wind from intruding.

Error Code	LED1 (green)	LED2 (red)	Symptom	Cause	Corrective action
4116	7 blinks	—	Abnormal rotation of the fan motor 4 (Centrifugal fan does not work, insufficient motor speed, excessive motor speed, or rotation detected when operation is stopped)	Faulty connection of the exhaust fan motor connector (CN9) on the power circuit board	Check the connector (CN9) connection on the power circuit board. (Upper side: LG-X08DC-P7)
				Faulty connection of the connectors (CN19–CN119) between the control circuit board and power circuit board (Upper side) (CN21–CN121) between the control circuit board and power circuit board (Lower side)	Check the connector connections (CN19–CN119) and (CN21–CN121).
				The model selection switch (SW6) is not set correctly.	Make the SW6 setting appropriate for the model. (See Chapter 7. (14) Setting status record (page 56).)
				The temperature around the product is high.	Use the product at a temperature of 104°F (40°C) or lower.
				The motor and centrifugal fan are not fixed securely.	Check the installation state of the motor and centrifugal fan, and fix them securely.
				Deformed centrifugal fan	Replace the centrifugal fan.
				Foreign objects around the centrifugal fan	Check the air course and around the centrifugal fan, and remove any foreign matter.
				Fan motor failure	Replace the DC motor. (See page 18.)
				Circuit board failure	Replace the power circuit board. (Upper side: LG-X08DC-P7)
				When operation is stopped, the fan rotates due to outside wind.	Prevent the outside wind from intruding.
5101	4 blinks	—	Outdoor air (OA) thermistor related error	Faulty connection of the thermistor connector on the control circuit board	Check the connector connection. • If the function selection switch (SW2-10) is ON, check the connector (CN5). • If the function selection switch (SW2-10) is OFF, check the connector (CN7).
				Thermistor failure	Disconnect the above connector, and check the resistance of the thermistor. If the equivalent thermistor resistance differs greatly from the ambient temperatures, replace the thermistor. (See (5) Temperatures and thermistor resistance table (page 42).)

Error Code	LED1 (green)	LED2 (red)	Symptom	Cause	Corrective action
5102	5 blinks	—	Return air (RA) thermistor related error	Faulty connection of the thermistor connector on the control circuit board	Check the connector connection. • If the function selection switch (SW2-10) is ON, check the connector (CN5). • If the function selection switch (SW2-10) is OFF, check the connector (CN7).
				Thermistor failure	Disconnect the above connector, and check the resistance of the thermistor. If the equivalent thermistor resistance differs greatly from the ambient temperatures, replace the thermistor. (See (5) Temperatures and thermistor resistance table (page 42).)
5501	12 blinks	—	CO_2 sensor error (Optional components: PZ-70CSW-E, PZ-70CSD-E)	The connectors for the CO_2 sensor are disconnected.	Check the connector connections (CN34 (only for PZ-70CSW-E), CN23, CN26, and CN35) on the control circuit board.
				CO_2 sensor failure	Check the CO_2 sensor wiring according to the PZ-70CSW-E/ PZ-70CSD-E Installation and Instruction Manual. If the problem persists even after correcting the wiring, replace the CO_2 sensor.
				Even though the CO_2 sensor is not connected, CO_2 sensor setting (the function selection switches (SW5-6 to SW5-8) on the circuit board or the function setting (No. 66) of TZ-62DR-EA/PZ-62DR-EA) is set as shown below. • “The PZ-70CSW-E connected” (SW5-6: ON, SW5-7 and SW5-8: OFF, or No.66: 5) • “PZ-70CSD-E connected” (SW5-6 and SW5-7: ON, SW5-8: OFF, or No.66: 7)	When the CO_2 sensor is not connected, set the function selection switches (SW5-6 to SW5-8) on the circuit board to OFF, or the function setting (No. 66) of TZ-62DR-EA/ PZ-62DR-EA to “1: No external fan speed control input”.
6201	—	—	TZ-62DR-EA/ PZ-62DR-EA circuit board failure	Remote controller failure	Replace the TZ-62DR-EA/ PZ-62DR-EA remote controller.
6202	—	—	TZ-62DR-EA/ PZ-62DR-EA circuit board failure	Clock function of the remote controller is not working properly.	Replace the TZ-62DR-EA/ PZ-62DR-EA remote controller.
6600	—	6 blinks	Multiple address error	The system contains two or more units (*1) with the same address in the same M-NET transmission cable line.	Find the units (*1) with the same address, and set unique addresses to these units.

(*1) This refers to devices assigned an address number in MELANS such as the Lossnay unit, City Multi indoor unit, City Multi outdoor unit, or system controller.

Error Code	LED1 (green)	LED2 (red)	Symptom	Cause	Corrective action
6602	—	2 blinks	Transmission error (transmission processor hardware error)	Faulty connection of the M-NET transmission cable	Check the items described in (1) [2].
				• Wiring was performed with power still supplied to the M-NET transmission cable. • Accidental communication error	Restart the system after completing wiring. If the error re-occurs, check for noise on the transmission cable. If the above does not correct the problem, replace the Lossnay control circuit board.
				Power is supplied to the same transmission cable from two or more power supply units. The power supply unit is connected to the TB3 terminal of the transmission booster.	Check the wiring of the power supply unit and the transmission booster.
				TZ-62DR-EA/PZ-62DR-EA is connected to the terminals (TB5 [A] [B]).	Connect TZ-62DR-EA/PZ-62DR-EA to the terminals (TM4 [1] [2]). (See the Lossnay Operating/ Installation Instructions or TZ-62DR-EA/PZ-62DR-EA Instruction Book.)
				Malfunction of the unit (*1) where an error occurs	Check the unit (*1) where the error occurs.
6603	—	5 blinks	Transmission error (transmission bus busy)	Faulty connection of the M-NET transmission cable	Check the items described in (1) [2].
				• Wiring was performed with power still supplied to the M-NET transmission cable. • Accidental communication error	Restart the system after completing wiring. If the error re-occurs, check for noise on the transmission cable. If the above does not correct the problem, replace the Lossnay control circuit board.
				Power is supplied to the same transmission cable from two or more power supply units. The power supply unit is connected to the TB3 terminal of the transmission booster.	Check the wiring of the power supply unit and the transmission booster.
				TZ-62DR-EA/PZ-62DR-EA is connected to the terminals (TB5 [A] [B]).	Connect TZ-62DR-EA/PZ-62DR-EA to the terminals (TM4 [1] [2]). (See the Lossnay Operating/ Installation Instructions or TZ-62DR-EA/PZ-62DR-EA Instruction Book.)
				Malfunction of the unit (*1) where an error occurs	Check the unit (*1) where the error occurs.

(*1) This refers to devices assigned an address number in MELANS such as the Lossnay unit, City Multi indoor unit, City Multi outdoor unit, or system controller.

Error Code	LED1 (green)	LED2 (red)	Symptom	Cause	Corrective action
6606	—	3 blinks	Transmission/ reception error (communica-tion error with transmission processor)	Faulty connection of the M-NET transmission cable	Check the items described in (1) [2].
				• Wiring was performed with power still supplied to the M-NET trans-mission cable. • Accidental communication error	Restart the system after completing wiring. If the error re-occurs, check for noise on the transmission cable. If the above does not correct the problem, replace the Lossnay con-trol circuit board.
				Malfunction of the unit (*1) where an error occurs	Check the unit (*1) where the error occurs.
6607	—	8 blinks	Transmission/ reception error (no ACK error)	The power of the Lossnay unit is not ON.	Check the power of the Lossnay unit.
				The Lossnay address was changed.	Check the Lossnay address.
				TZ-62DR-EA/PZ-62DR-EA is con-nected to the terminals (TB5 [A] [B]).	Connect TZ-62DR-EA/PZ-62DR-EA to the terminals (TM4 [1] [2]). (See the Lossnay Operating/ Installation Instructions or TZ-62DR-EA/PZ-62DR-EA Instruction Book.)
6608	—	8 blinks	Transmission/ reception error (no response error)	Multiple M-NET transmission cables are wired using multicore cables.	Using the applicable cable, wire the transmission cable away from one another.
				The M-NET transmission cable is not securely connected.	Check the transmission cable connections.
				The wiring length of the M-NET transmission cable is longer than specified. • Max. extension: 219 yd. (200 m) • Total extension: 547 yd. (500 m)	Check the wiring length of the transmission cable.
				TZ-62DR-EA/PZ-62DR-EA is con-nected to the terminals (TB5 [A] [B]).	Connect TZ-62DR-EA/PZ-62DR-EA to the terminals (TM4 [1] [2]). (See the Lossnay Operating/ Installation Instructions or TZ-62DR-EA/PZ-62DR-EA Instruction Book.)

(*1) This refers to devices assigned an address number in MELANS such as the Lossnay unit, City Multi indoor unit, City Multi outdoor unit, or system controller.

Error Code	LED1 (green)	LED2 (red)	Symptom	Cause	Corrective action
6801	9 blinks	—	PZ-43SMF-E communication error	Multiple PZ-43SMF-E transmission cables are wired using multicore cables.	Using the applicable cable, wire the transmission cable away from one another.
				The power supply cable is too close to the PZ-43SMF-E transmission cable.	Wire the power supply cable at least 2 in. (5 cm) away from the transmission cable.
				Faulty connection of the PZ-43SMF-E transmission cable	Check the transmission cable connections.
				The wiring length of the PZ-43SMF-E transmission cable is longer than specified (219 yd. (200 m) or more).	Check the wiring length of the transmission cable.
				PZ-43SMF-E is connected to the terminals (TB5 [A] [B]).	Connect PZ-43SMF-E to the terminals (TM4 [1] [2]). (See the Lossnay Operating/ Installation Instructions.)
6831	9 blinks	—	TZ-62DR-EA/ PZ-62DR-EA communication error (no reception)	Faulty connection of the TZ-62DR-EA/PZ-62DR-EA transmission cable	Check the items described in (1) [2]. If the error re-occurs, check for noise on the transmission cable. If the above does not correct the problem, replace the Lossnay control circuit board or TZ-62DR-EA/ PZ-62DR-EA remote controller.
				TZ-62DR-EA/PZ-62DR-EA is connected to the terminals (TB5 [A] [B]).	Connect TZ-62DR-EA/PZ-62DR-EA to the terminals (TM4 [1] [2]). (See the Lossnay Operating/ Installation Instructions or TZ-62DR-EA/PZ-62DR-EA Instruction Book.)
6832	9 blinks	—	TZ-62DR-EA/ PZ-62DR-EA communication error (synchronization recovery error)	Faulty connection of the TZ-62DR-EA/PZ-62DR-EA transmission cable	Check the items described in (1) [2]. If the error re-occurs, check for noise on the transmission cable. If the above does not correct the problem, replace the Lossnay control circuit board or TZ-62DR-EA/ PZ-62DR-EA remote controller.
6833	9 blinks	—	TZ-62DR-EA/ PZ-62DR-EA communication error (hardware error)	Faulty connection of the TZ-62DR-EA/PZ-62DR-EA transmission cable	Check the items described in (1) [2]. If the error re-occurs, check for noise on the transmission cable. If the above does not correct the problem, replace the Lossnay control circuit board or TZ-62DR-EA/ PZ-62DR-EA remote controller.
6834	9 blinks	—	TZ-62DR-EA/ PZ-62DR-EA communication error (start bit detection error)	Faulty connection of the TZ-62DR-EA/PZ-62DR-EA transmission cable	Check the items described in (1) [2]. If the error re-occurs, check for noise on the transmission cable. If the above does not correct the problem, replace the Lossnay control circuit board or TZ-62DR-EA/ PZ-62DR-EA remote controller.
			Communication error between leader and follower units	Communication error between the leader and follower units when the leader-follower function is set	Check for faulty connection of the transmission cables between the leader and follower units.

Error Code	LED1 (green)	LED2 (red)	Symptom	Cause	Corrective action
7113	10 blinks	—	Function setting error	The group contains two or more Loss-nay units with the same address.	Set unique addresses to these units.
				The model selection switch (SW6) is not set correctly.	Make the SW6 setting appropriate for the model. (See Chapter 7. (14) Setting status record (page 56).)
				Improper power circuit board is used. The applicable circuit boards must be used as shown below. LG-X08DC-P7 (Upper side) LG-X08DC-P8 (Lower side)	Check that the applicable power circuit board is connected.
				The setting of the leader-follower function is incorrect.	For the leader unit, set the function selection switch (SW5-4) to ON. For the follower units, set the function selection switch (SW5-5) to ON.

(5) Temperatures and thermistor resistance table

Temperature (°F)	Temperature (°C)	Resistance value (kΩ)	Temperature (°F)	Temperature (°C)	Resistance value (kΩ)	Temperature (°F)	Temperature (°C)	Resistance value (kΩ)	Temperature (°F)	Temperature (°C)	Resistance value (kΩ)	Temperature (°F)	Temperature (°C)	Resistance value (kΩ)
-22	-30	64.2 to ∞	19.4	-7	19.4	46.4	8	9.9	73.4	23	5.4	100.4	38	3.1
⋮	⋮	⋮	21.2	-6	18.5	48.2	9	9.5	75.2	24	5.2	102.2	39	3.0
-4.0	-20	37.2	23.0	-5	17.7	50.0	10	9.1	77.0	25	5.0	104.0	40	2.9
-2.2	-19	35.3	24.8	-4	16.9	51.8	11	8.7	78.8	26	4.8	105.8	41	2.8
-0.4	-18	33.5	26.6	-3	16.1	53.6	12	8.4	80.6	27	4.6	107.6	42	2.7
1.4	-17	31.8	28.4	-2	15.4	55.4	13	8.0	82.4	28	4.5	109.4	43	2.6
3.2	-16	30.2	30.2	-1	14.7	57.2	14	7.7	84.2	29	4.3	111.2	44	2.5
5.0	-15	28.7	32.0	0	14.0	59.0	15	7.4	86.0	30	4.2	113.0	45	2.5
6.8	-14	27.3	33.8	1	13.4	60.8	16	7.1	87.8	31	4.0	114.8	46	2.4
8.6	-13	26.0	35.6	2	12.8	62.6	17	6.8	89.6	32	3.9	116.6	47	2.3
10.4	-12	24.7	37.4	3	12.3	64.4	18	6.6	91.4	33	3.7	118.4	48	2.2
12.2	-11	23.6	39.2	4	11.8	66.2	19	6.3	93.2	34	3.6	120.2	49	2.2
14.0	-10	22.4	41.0	5	11.3	68.0	20	6.1	95.0	35	3.5	122.0	50	2.1
15.8	-9	21.4	42.8	6	10.8	69.8	21	5.8	96.8	36	3.3	⋮	⋮	⋮
17.6	-8	20.4	44.6	7	10.3	71.6	22	5.6	98.6	37	3.2	194	90	0 to 0.7

* Measure the thermistor (TH2) resistance across pin No. 1 and 2 of CN5, and the thermistor (TH1) resistance across pin No. 1 and 3 of CN7.

(6) Motor resistance table

⚠**Cautions**:

- **Before disconnecting the motor connectors, make sure that the power is turned OFF and the circuit board is discharged adequately.**
- **Even after the power supply is cut off, the capacitor is charged. Therefore, high voltage is applied to the motor for a while. Make sure that the LEDs on the circuit boards are turned OFF before starting work.**
- **Never touch the circuit board while the power is ON. It causes electric shock and failure of the unit.**

Replace the DC motor in the following cases.

[1] If it is hard to rotate the motor shaft by hand

[2] If the resistance between the motor leads is significantly different from the values specified in the table below

*Before measuring the resistance, the motor connectors must be disconnected from the circuit board.

*Be sure to measure the resistance by touching COM line of the tester to Pin No. 3 (of Fan motor 1 or 3 connector) or No. 4 (of Fan motor 2 or 4 connector).

Pin No.	Fan motor 1 or 3 connector	3-1	3-4	3-5	3-6
	Fan motor 2 or 4 connector	4-1	4-5	4-6	4-7
Normal resistance		About 800 kΩ	About 40 kΩ	About 17 kΩ	∞ kΩ

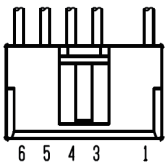

Fan motor 1 or 3 connector

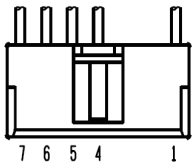

Fan motor 2 or 4 connector

7. Overhauling procedures

■ **Work precautions**

- When touching the electric components such as circuit boards and fan motors, do not touch the components for more than 5 minutes after power-off, and then start working. If LED4 or LED6 on the circuit board is lit, do not touch the electric components.
- Before replacing parts or components, follow the instructions described in the troubleshooting.
- When servicing, always keep proper footing.
- When servicing, be sure to turn off the power supply isolator. Pay sufficient attention to avoid electric shock or injury.
- Be sure to connect the power supply wires correctly.
- Avoid application of abnormal voltage.
- Pay attention not to drop the parts or components.
- When the tightening torque for assembling is specified, be sure to tighten to the specified tightening torque.
- After connecting the lead wires, make sure that they are securely connected.
- After completing repairs, check that the product operates properly.

∗ **Always wear a pair of gloves when servicing.**

<External and internal view of the product>

Names within angle brackets < > are part names listed in the parts catalog.

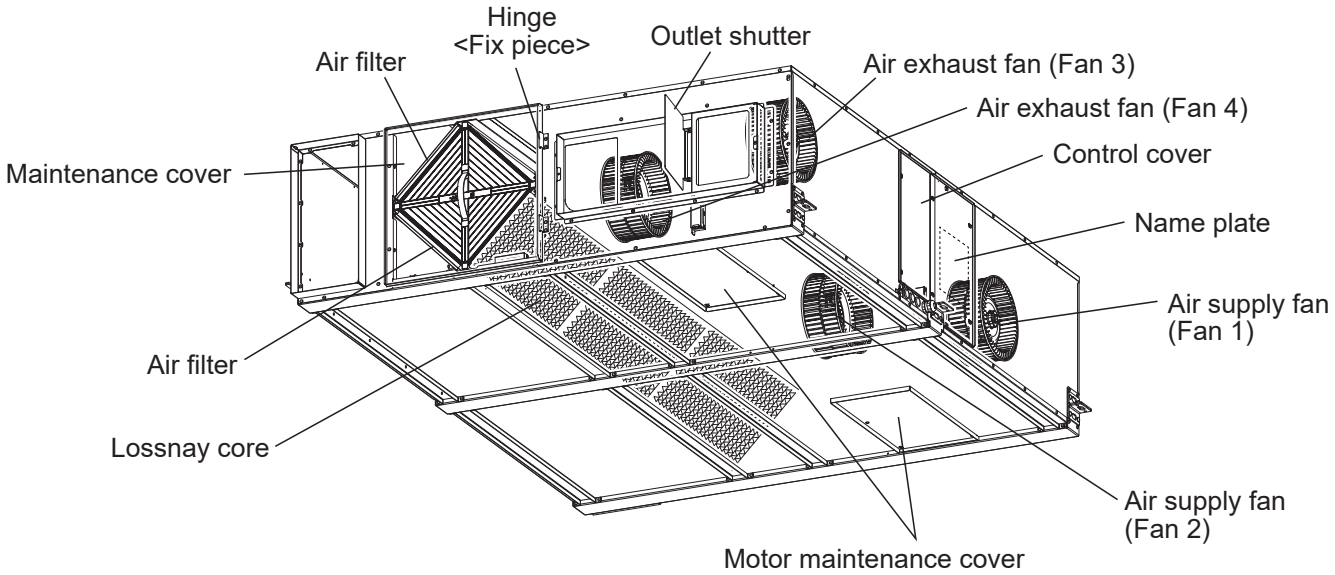

Above drawing shows the fan names when LR Switching is at the factory setting.
Fan direction would be changed as shown in the table below by LR Switching setting.

	LR Switching (DIP SW2-10)	
	OFF (Factory setting)	ON
Fan 1 Fan 2	Supply fan	Exhaust fan
Fan 3 Fan 4	Exhaust fan	Supply fan

(1) Turning power off

[1] Shut down the unit.

[2] Turn off the power supply isolator.

Precaution
When servicing, power supply to M-NET must be turned off. Live-line working may cause a circuit board failure.

(2) Fan parts

[1] Remove the screws (two PTT screws 4×8, indicated by ○) .

[2] Loosen the screws (four PTT screws 4×8, indicated by □) and remove the motor maintenance cover by sliding it .

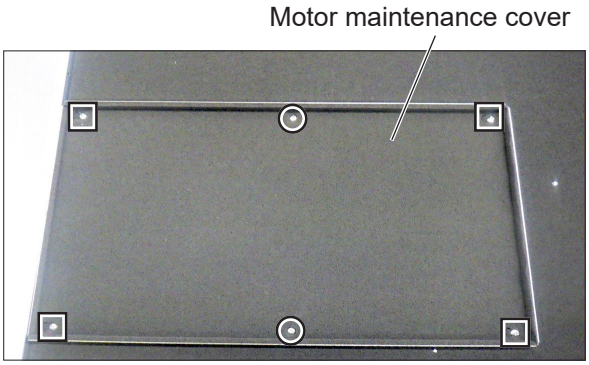

[3] Remove the screws (two PTT screws 4×8, indicated by ○).

[4] Remove the separator by sliding it in the direction of the arrow.

Precaution
Be careful not to injure yourself with the edges of the openings.

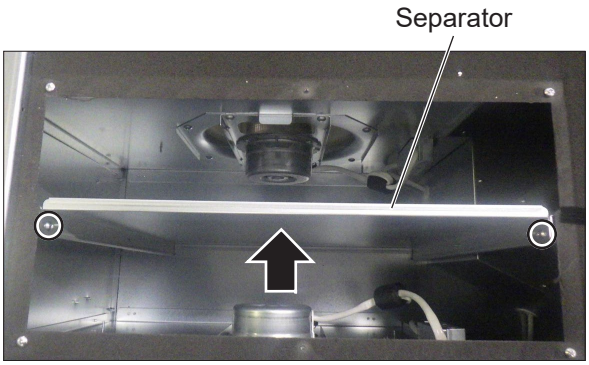

[5] Push the tab, and remove the connector cover.

[6] Open the cord clamper.

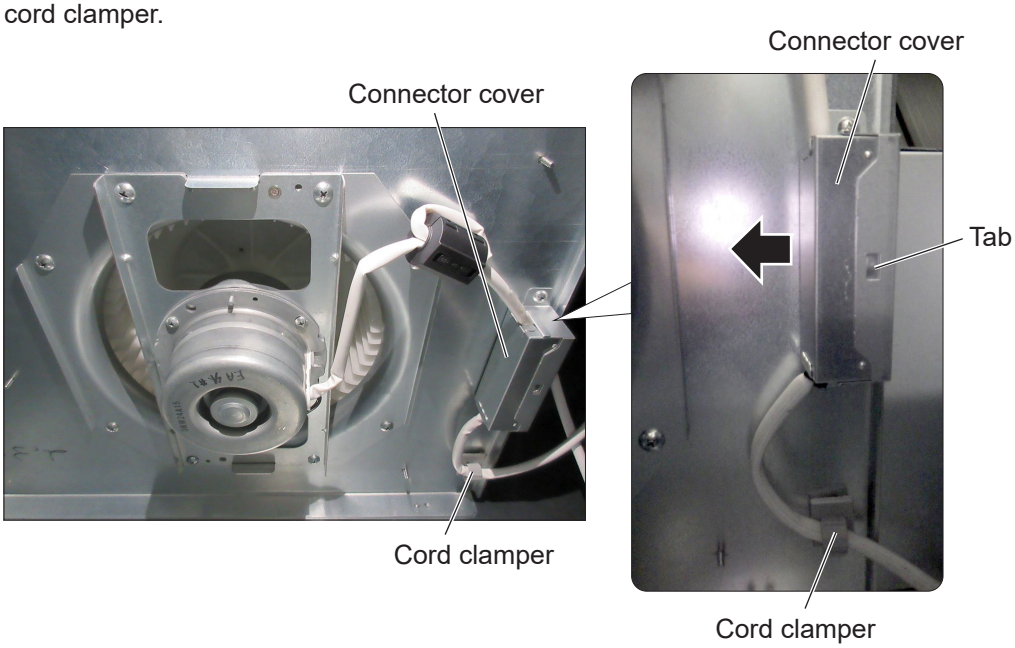

[7] Disconnect the connectors.

Precaution
When disconnecting the motor connectors, make sure that the power supply is turned off. Even when the fan motor is stopped, disconnecting the live-line connectors will cause a motor malfunction.

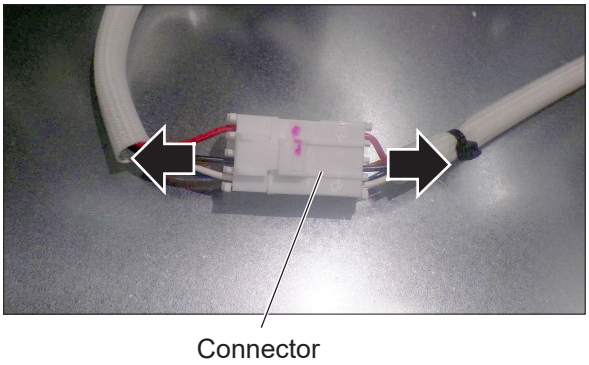

[8] Remove the screws (eight PTT screws 5×10, indicated by ○), and remove the fan assembly.

Note: Remove the other fan assemblies in the same way.

Precaution
When taking out the fan assembly, hold the DC motor or motor leg.
Do not hold the centrifugal fan.

Assembly precaution
When attaching the centrifugal fan, tighten the special nut to the tightening torque of 7.50±0.3 N·m.

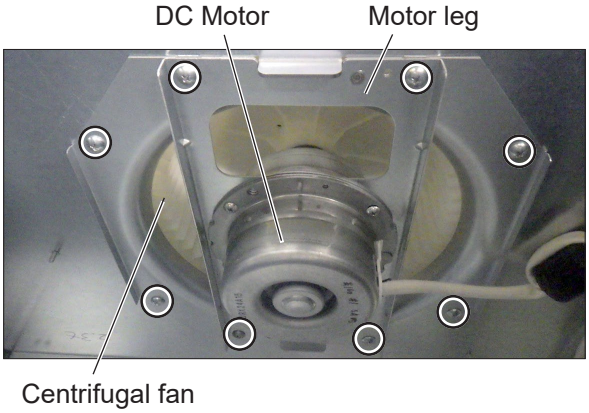

(3) Terminal block parts

[1] Loosen the black screws (nine special screws PT 4×8, indicated by ○), and remove both control covers.

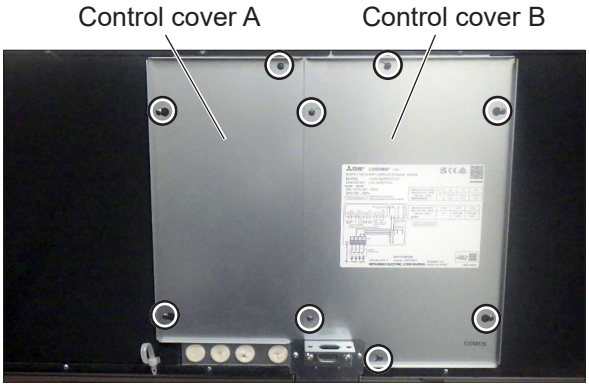

For TLGHF0940RVXT02A/LGH-F940RVXT2-E and TLGHF1200RVXT02A/LGH-F1200RVXT2-E

[2] Check that LED4 on the control circuit board is OFF.

[3] Disconnect the connectors (indicated by ○) from the power circuit boards.

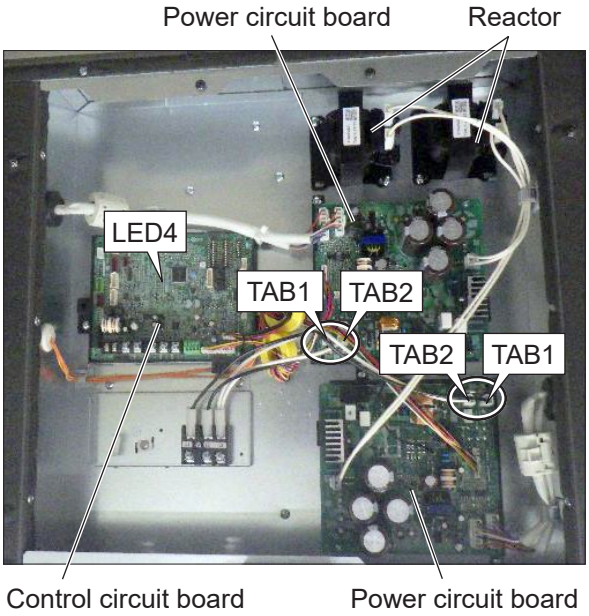

For TLGHF1500RVXT02A/LGH-F1500RVXT2-E

[2] Check that LED4 on the control circuit board is OFF.

[3] Disconnect the connectors (indicated by ○) from the power circuit boards, and then open the cord clampers (indicated by △).

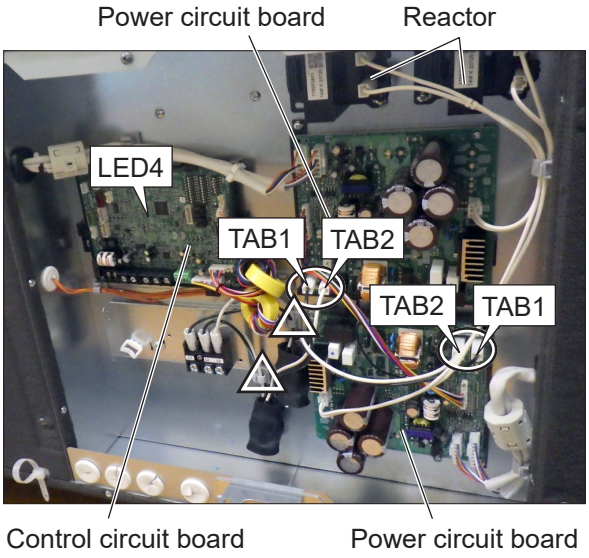

[4] Remove the screw (one PPT screw 4×20, indicated by ○), and remove the terminal block with the lead wires.

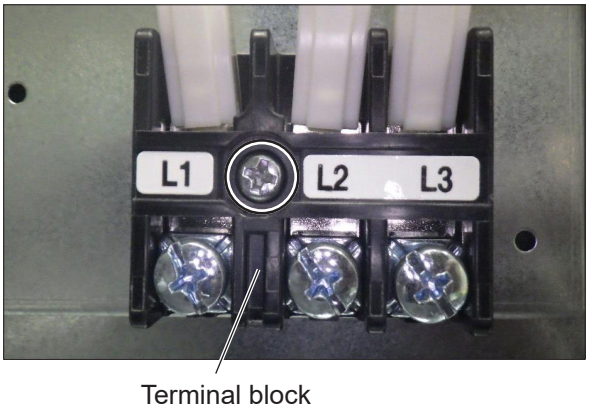

Assembly precaution
When replacing the terminal block parts, reconnect the lead wires according to the numbers shown in the right picture.

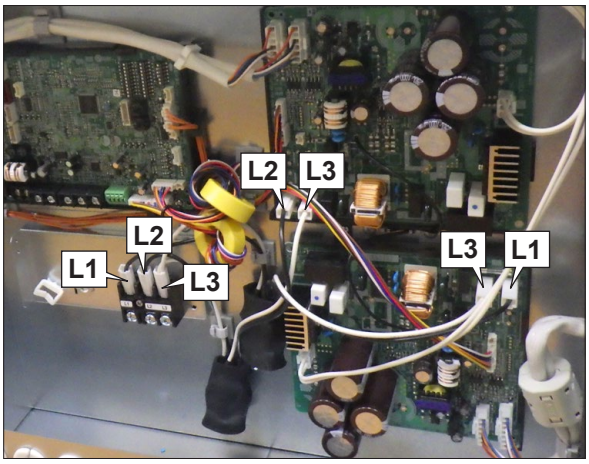

(4) Reactors

[1] Remove the control covers. → See (3) [1].

[2] Check that LED4 on the control circuit board is OFF, and then disconnect the connectors (indicated by ○) from each reactor.

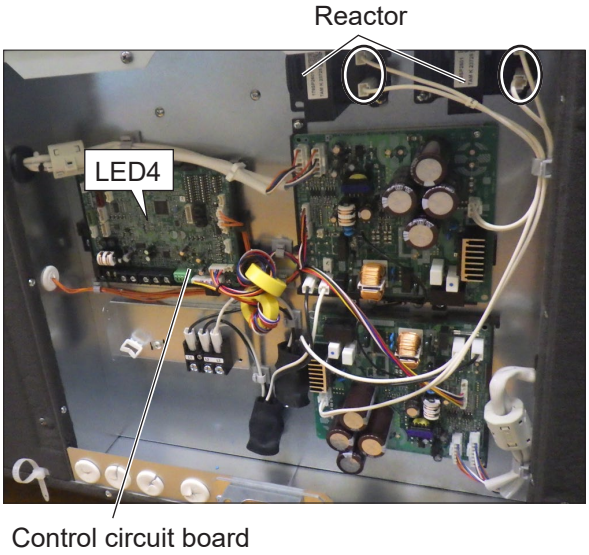

[3] Remove the screws (two PT screws 4×8 for each, indicated by ○), and remove the reactor.

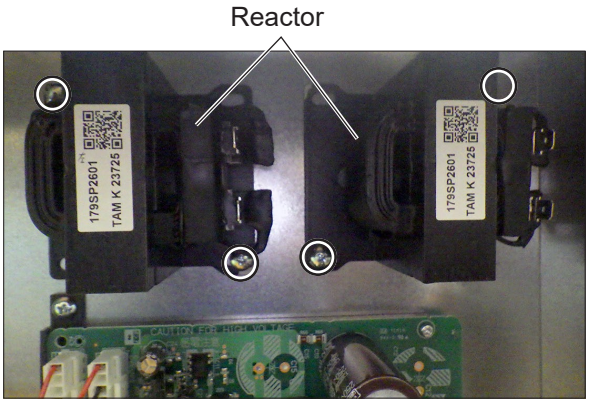

(5) Control circuit board

Precaution
Before replacing the circuit boards, see (12) Procedures for replacing the circuit boards (page 53).

[1] Remove the control covers. → See (3) [1].

[2] Check that LED4 on the control circuit board is OFF, and then disconnect the connectors (indicated by ○) from the control circuit board.

[3] Remove the screws (two PT screws 4×8, indicated by △), and remove the control circuit board.

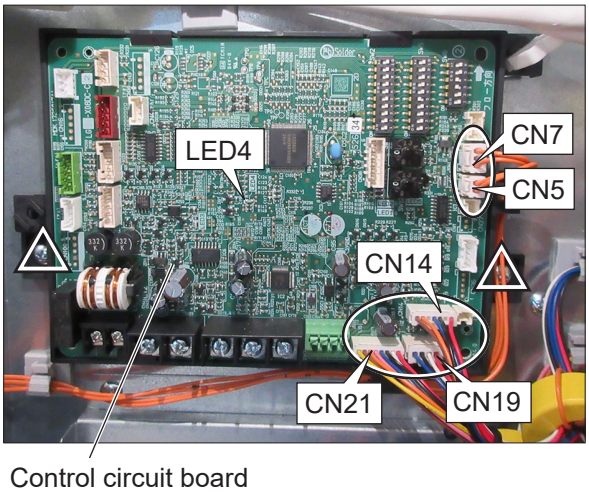

(6) Power circuit boards

Precaution
Before replacing the circuit boards, see (12) Procedures for replacing the circuit boards (page 53).

[1] Remove the control covers. → See (3) [1].

[2] Check that LED4 on the control circuit board is OFF, and then disconnect the connectors (indicated by ○) from the power circuit boards.

Precaution
When disconnecting the motor connectors, make sure that the power supply is turned off and all LEDs are unlit. Even when the fan motors are stopped, disconnecting the live-line connectors will cause a motor malfunction.

Power circuit board (LG-X08DC-P7)

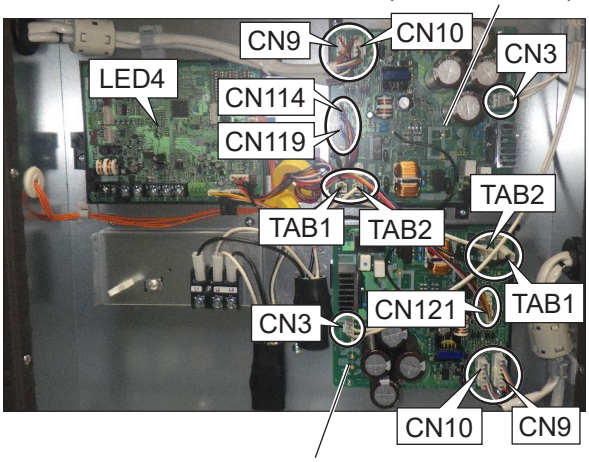

Power circuit board (LG-X08DC-P8)

[3] Remove the screws (one PT screw 4×8 BS for each, indicated by ○).

[4] Remove the screws (two PT screws 4×8 for each, indicated by △), and remove each power circuit board.

Assembly precaution
Be aware of the difference between the power circuit boards.

Power circuit board (LG-X08DC-P7: Upper side)

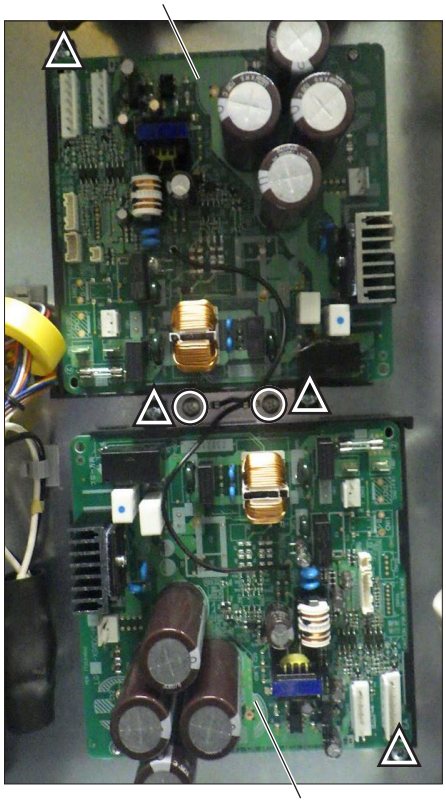

Power circuit board (LG-X08DC-P8: Lower side)

(7) Lossnay cores

[1] Remove the black screws (two special screws PT 4x12*, indicated by ○), and open the maintenance cover.

*Special screws PT 4x8 are used for some Lossnay units.

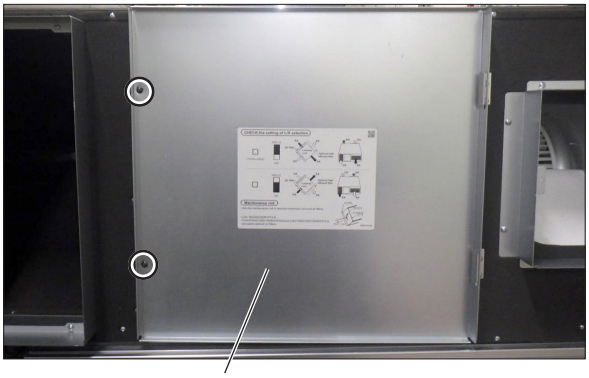

Maintenance cover

[2] Remove the front filters from the main unit.

[3] Remove the back filters from the main unit by using the maintenance rod.

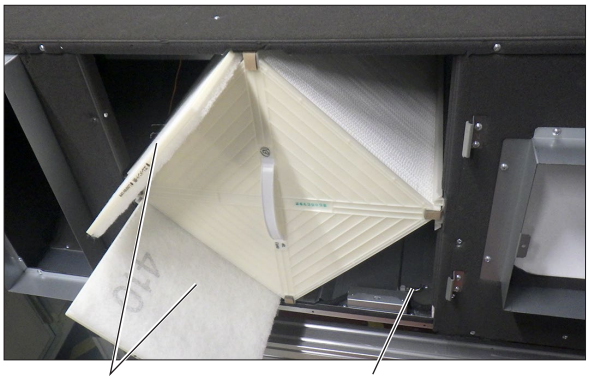

Front filter Maintenance rod

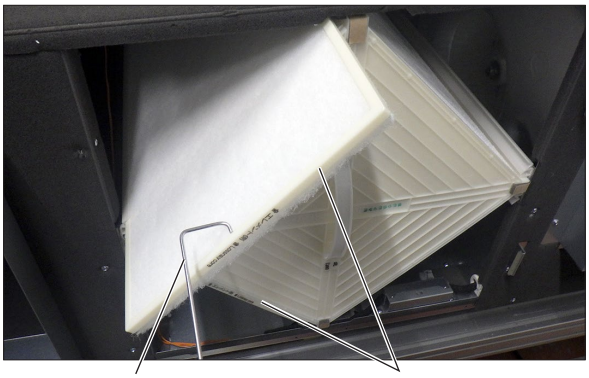

Maintenance rod Back filter

[4] Hold the handle, and draw the Lossnay cores out from the main unit.

[5] Use the maintenance rod to remove the second and third Lossnay cores.

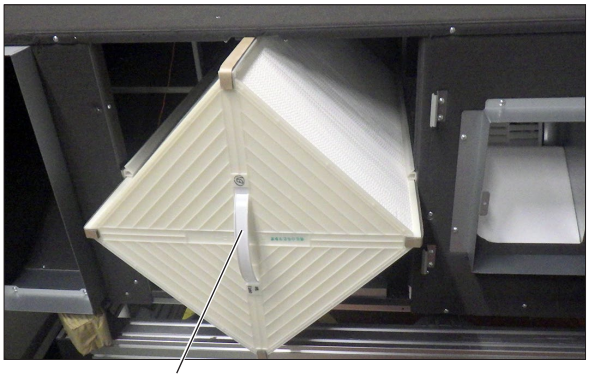

Handle

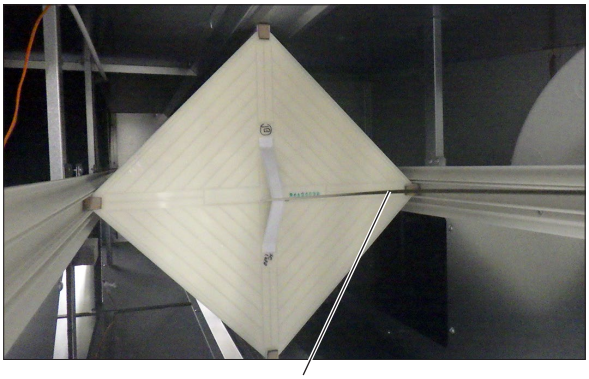

Maintenance rod

(8) Filter curtains

[1] Remove the maintenance cover. → See (7) [1].

[2] Remove the filters and Lossnay cores from the main unit. → See (7) [2] to [5].

[3] Remove the screws (two PTT screws 4×8 for each, indicated by ○), and remove the filter curtains.

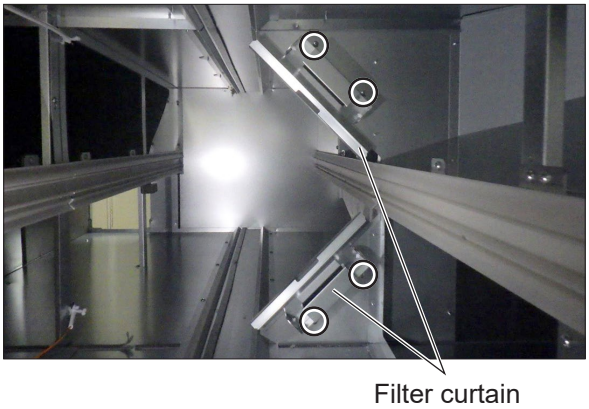

Assembly precaution
When using the advanced high efficiency filters, install them with the filter curtains opened.
For details, see the Operating Instructions for the filters.

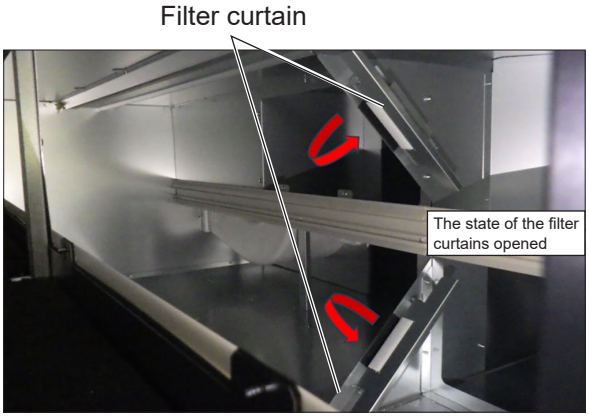

(9) Lossnay core holders

[1] Remove the maintenance cover. → See (7) [1].

[2] Remove the filters and Lossnay cores from the main unit. → See (7) [2] to [5].

[3] Remove the screws (special screws 4×8*, indicated by ○) to remove the Lossnay core holders.

*Three screws for each front (shorter) holder
*Five screws for each back (longer) holder

Assembly precaution
When attaching the Lossnay core holders, tighten the special screws to the specified tightening torque (0.78 N·m).

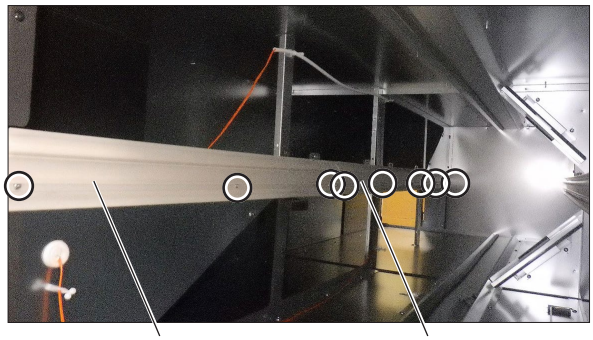

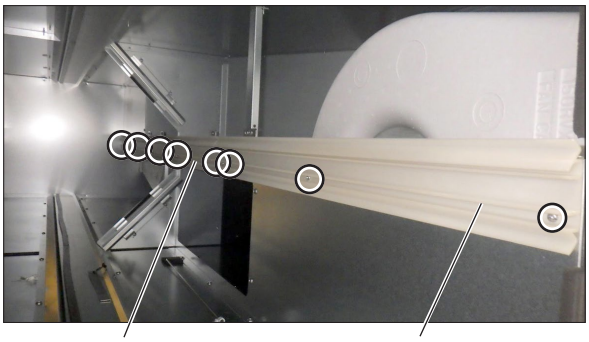

(10) Thermistors

[1] Open the maintenance cover. →See (7) [1].

[2] Remove the filters and Lossnay cores from the main unit. → See (7) [2] to [5].

[3] Push the tab, and remove the connector cover.

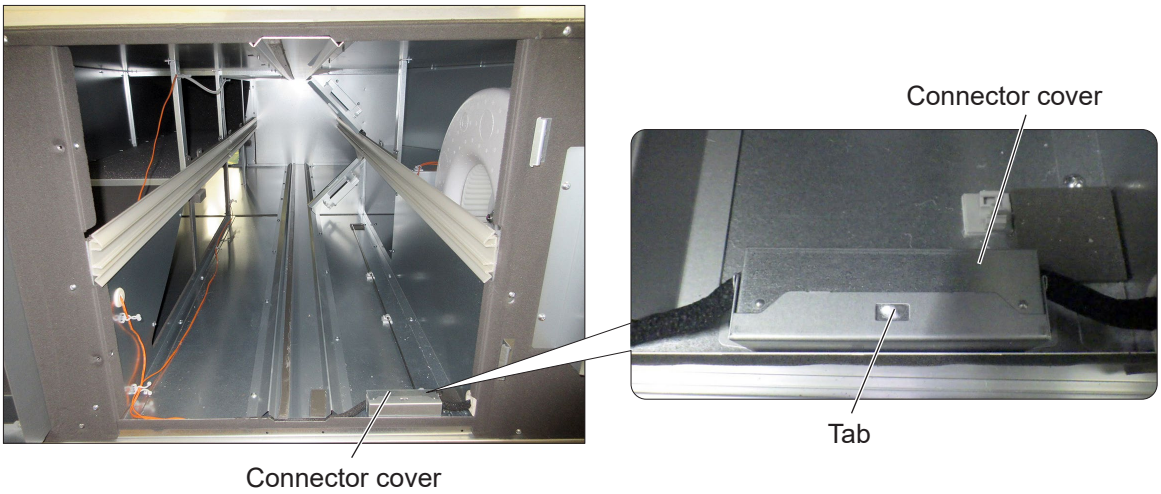

[4] Disconnect the thermistor connectors.

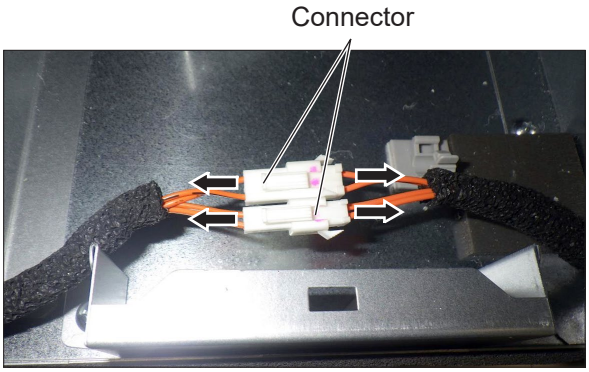

[5] Open the cord clips (indicated by ○), and remove the thermistor leads.

Assembly precaution
When wiring the thermistor leads, run the thermistor 1 lead through the bush.

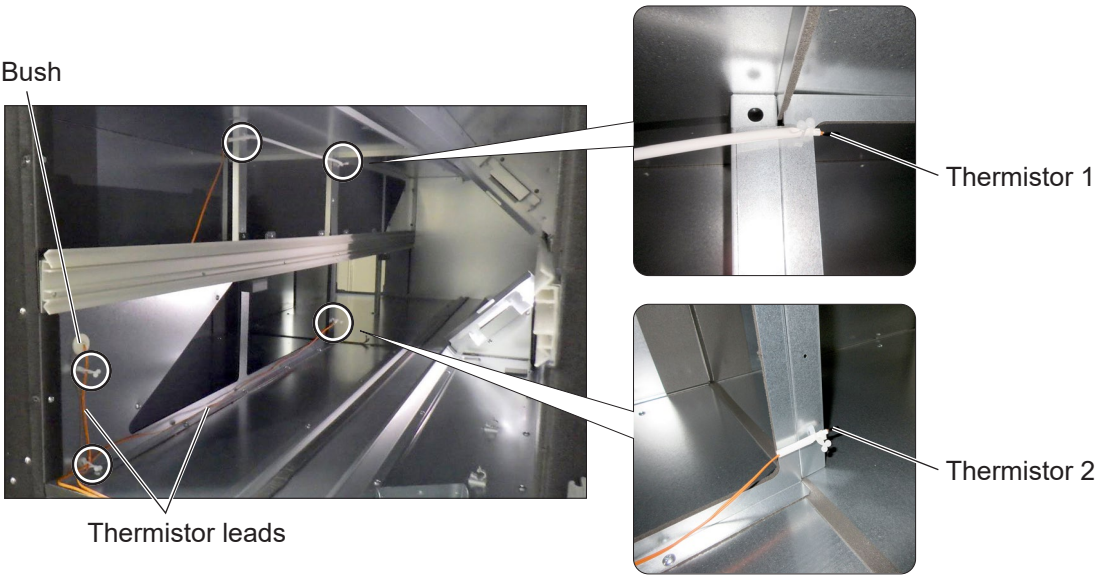

(11) Shutters

[1] Disconnect the SA (EA) duct from the Lossnay unit.

[2] Remove the screws (three PTT screws 4×8 for each, indicated by ○), and remove the shutter.

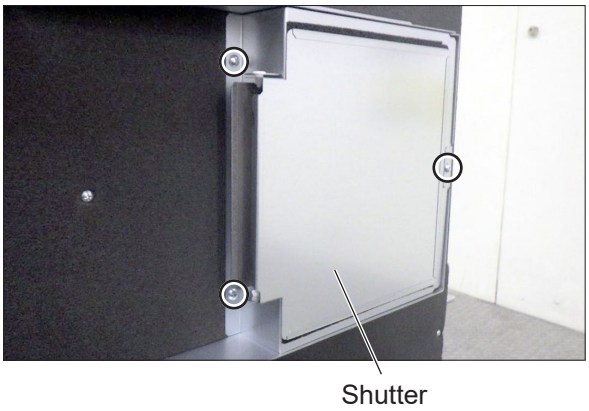

✻ When reassembling

- **Reassemble the unit in the reverse order of disassembly.**
- **After reassembly, always make a test run to make sure that the unit operates properly.**

(12) Procedures for replacing the circuit boards

Notes
- Before removing the circuit boards for replacement, check the following Steps 1 and 2.
- When the Lossnay remote controller TZ-62DR-EA/PZ-62DR-EA is connected, be sure to replace the circuit boards as described in the Steps.

Step	Details	Check item	
1	Check the system configuration.		
	Check if TZ-62DR-EA/PZ-62DR-EA is connected to the circuit board to be replaced.	TZ-62DR-EA/ PZ-62DR-EA connection	
	The following describes settings required when replacing the circuit boards per the system configuration. Check which system configuration is applicable, and then replace the circuit boards.	System Configuration	
	(A) 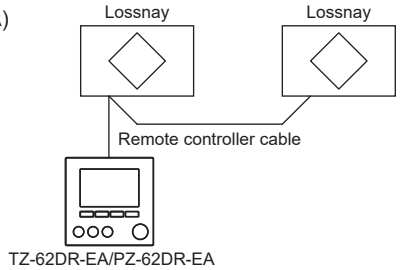 ① Setting of the function selection switches on the circuit board ② Setting of the TZ-62DR-EA/PZ-62DR-EA functions ③ Address setting (when M-NET is used) ➡ Go to Step 2.		
	(B) 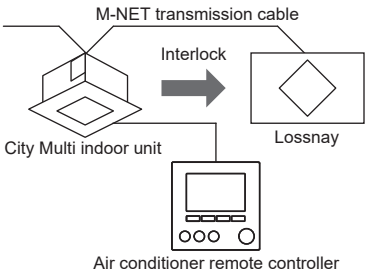 ① Setting of the function selection switches on the circuit board ② Address setting ➡ Go to Step 3.		
2	Check the settings on TZ-62DR-EA/PZ-62DR-EA.		
	Regarding the settings on TZ-62DR-EA/PZ-62DR-EA, prepare the data recorded at the time of installation (setting status record, etc.). In the case there is no data recorded at the time of installation, and if the Lossnay unit can be operated with TZ-62DR-EA/PZ-62DR-EA, use the form in “(14) Setting status record (page 56)” to record the settings on TZ-62DR-EA/PZ-62DR-EA. To check the settings on TZ-62DR-EA/PZ-62DR-EA, see the Lossnay Operating/ Installation Instructions or TZ-62DR-EA/PZ-62DR-EA Instruction Book. • On the function setting screen of TZ-62DR-EA/PZ-62DR-EA, display the M-NET address of the Lossnay unit for which you wish to check the settings. • The address can be checked by the address setting switches (SW12 and SW11) on the Lossnay circuit board.	Setting status record	
3	Setting status record of the address setting switches and function selection switches on the circuit board		
	Using the form in “(14) Setting status record (page 56)”, record setting statuses necessary for replacing the circuit board. Remove the control covers, and check the setting status of each switch on the circuit board. If the function setting statuses were recorded at the time of installation, this step can be skipped. [1] Address setting (SW12 and SW11) [2] Function selection switches (SW2, SW5) and model selection switch (SW6) setting [3] External input (as necessary, record the connection status)	Setting status record	

Step	Details	Check item	
4	Removing the circuit boards		
	• For the working precautions, see page 43. • For removing the circuit boards, see (5) Control circuit board (page 47) and (6) Power circuit boards (page 48).		
5	Attaching the circuit boards		
	[1] According to the function status record data prepared in Step 3, set the address setting switches, function selection switches, and model selection switch of the new circuit board. a. Address setting (SW12 and SW11) b. Function selection switches (SW2, SW5) and model selection switch (SW6) setting	Address setting Function setting Model selection	
	[2] Attach the power circuit board in the reverse order of the steps for removing. There are two types of the power circuit board. When replacing the circuit board, use the applicable circuit board according to the table below.	Circuit board fixing screw (1 pc.) PCB fix plate fixing screw (2 pcs.) Earth fixing screw (1 pc.)	

Power circuit board	Position of the circuit board
LG-X08DC-P7	Upper side
LG-X08DC-P8	Lower side

Be sure to connect the connectors listed in the following table.

Connector	Symbol on the circuit board	Check
For power supply connection	TAB1, TAB2	
For reactor connection	CN3	
For fan motor connection	CN9, CN10	
For control circuit board connection*	CN114, CN119, CN121	

*LG-X08DC-P7 : CN114, CN119
LG-X08DC-P8 : CN121

	[3] Attach the control circuit board in the reverse order of the steps for removing, and then connect the connectors, remote controller transmission cable, M-NET transmission cable, and external signal cable, etc. Be sure to connect the connectors or terminals listed in the following table. (Connect TZ-62DR-EA/PZ-62DR-EA or PZ-43SMF-E transmission cable terminal, M-NET transmission cable terminal, and connector/terminal for external signal cable only when they are used.)	Circuit board fixing screw (1 pc.) PCB fix plate fixing screw (2 pcs.) Connector connection TZ-62DR-EA/ PZ-62DR-EA transmission cable connection M-NET transmission cable connection External signal cable connection	
	[4] Reattach the control covers.	Cover screw (black) (9 pcs.)	

Connector and terminal	Symbol on the circuit board	Check
For thermistor connection	CN5, CN7	
For power circuit board connection	CN14, CN19, CN21	
TZ-62DR-EA/PZ-62DR-EA or PZ-43SMF-E transmission cable terminal	TM4 [1] [2]	
M-NET transmission cable terminal	TB5 [A] [B]	
For external signal cable connection	TM2, TM3, CN17, CN23, CN26, CN32, CN34, CN35, CN50, CN105	

Step	Details	Check item	
6	Function setting with TZ-62DR-EA/PZ-62DR-EA		
	When TZ-62DR-EA/PZ-62DR-EA is connected, according to the function status record data prepared in Step 2, set the function settings with TZ-62DR-EA/PZ-62DR-EA. If TZ-62DR-EA/PZ-62DR-EA is not connected, skip this step and proceed to Step 7. To perform function settings with TZ-62DR-EA/PZ-62DR-EA, see the Lossnay Operating/Installation Instructions or TZ-62DR-EA/PZ-62DR-EA Instruction Book. The selection method for “M-NET address” on the function setting screen differs between when the address setting switch on the Lossnay circuit board is set (the address is other than “00”) and when it is not set (the address is “00”). Check the address setting of the replaced circuit board. <When the address switch setting is other than “00”> For all function settings, always select the address of the Lossnay unit which the circuit boards were replaced. Even when there are multiple Lossnay units in the group, do not select “All”. <When the address switch is “00”> Always select “All”. Note: • When changing the settings of the function selection switches and address setting switches on the circuit board after the functions were set with TZ-62DR-EA/PZ-62DR-EA, reset the function settings according to “(13) Initialization (page 55)”. After resetting the function settings, perform the function settings again in the order of Step 5 [1] and Step 6. • If you change the M-NET address after the functions were set with TZ-62DR-EA/PZ-62DR-EA, the settings with TZ-62DR-EA/PZ-62DR-EA will be reset. In this case, set the functions again with TZ-62DR-EA/PZ-62DR-EA.	Address setting	
		Function setting	
7	Restarting the system		
	Turn the power back on to the Lossnay unit which the circuit boards have been replaced, or when using M-NET, turn the power back on to the power supply unit connected to the Lossnay unit. In trial operation, make sure that the Lossnay unit with replaced circuit boards operates properly, and finish replacement work.	Trial operation	

(13) Initialization

Set to initialize the remote controller TZ-62DR-EA/PZ-62DR-EA function setting.
All function settings which are changed by users are cancelled.

DIP-SW		Setting check	TZ-62DR-EA/PZ-62DR-EA		Setting check	Initialization
SW No.	Setting		Function No.	Setting data		
N/A	-	-	100	0		N/A
	-	-		1		Available

(14) Setting status record

[1] Basic information

Date:

Installation location:	
Model name: TLGHF- (0940 · 1200 · 1500) RVXT02A / LGH-F (940 · 1200 · 1500) RVXT2-E	
Serial number on the nameplate (eight-digit):	
Address setting:	
Lot number marked on the circuit board:	
Microcomputer software version marked on the circuit board:	
Lossnay remote controller: (Used · Not used)	Model name: (TZ-62DR-EA · PZ-62DR-EA · PZ-43SMF-E)
Interlocking with City Multi: (Set · Not set)	Model name: M-NET address:
Interlocking with Mr. Slim: (Set · Not set)	Model name:
System controller: (Used · Not used)	Model name:
Wi-Fi interface: (Used · Not used)	Model name:
CO_2 sensor: (Used · Not used)	Model name: (PZ-70CSW-E · PZ-70CSD-E · Other manufacturer's sensor)
Other sensor: (Used · Not used)	Model name: (Other manufacturer's sensor)
Monitor output device: (Used · Not used)	Model name: (PZ-4GS-E)
The number of Lossnay units in a group:	
Address number (The smallest number in the group):	
LR switching (DIP SW2-10): (ON · OFF)	
Leader-follower function: (Set · Not set)	

[2] Function selection switches

Enter the setting status of the function selection switches on the circuit board.

SW2	ON	OFF
1	□	□
2	□	□
3	□	□
4	□	□
5	□	□
6	□	□
7	□	□
8	□	□
9	□	□
10	□	□

SW5	ON	OFF
1	□	□
2	□	□
3	□	□
4	□	□
5	□	□
6	□	□
7	□	□
8	□	□
9	□	□
10	□	□

: Factory setting

Model selection switch

SW6	ON	OFF
1	□	□
2	□	□
3	□	□
4	□	□
5	□	□
6	□	□

Note: SW6 setting differs according to the model.

Model	SW6-1	SW6-2	SW6-3	SW6-4	SW6-5	SW6-6
TLGHF0940RVXT02A LGH-F940RVXT2-E	OFF	ON	OFF	ON	ON	OFF
TLGHF1200RVXT02A LGH-F1200RVXT2-E	ON	ON	OFF	ON	ON	OFF
TLGHF1500RVXT02A LGH-F1500RVXT2-E	OFF	OFF	ON	ON	ON	OFF

: Factory setting

[3] Function settings

Enter the setting data of the functions set with TZ-62DR-EA/PZ-62DR-EA.

Function No.	Setting Data	Function No.	Setting Data	Function No.	Setting Data	Function No.	Setting Data
1	(0)	32	(2)	50	(10)	77	(10)
2	(0)	33	(2)	51	(0)	78	(15)
5	(0)	34	(0)	52	(0)	83	(3)
6	(0)	35	(0)	53	(6)	84	(0)
7	(0)	36	(1)	54	(1)	85	(6)
8	(0)	37	(1)	60	(0)	86	(0)
9	(0)	38	(1)	61	(0)	87	(0)
12	(0)	39	(0)	62	(0)	88	(0)
13	(1)	40	(7)	64	(0)	89	(4)
14	(2)	41	(0)	65	(0)	90	(0)
15	(3)	42	(7)	66	(0)	91	(1)
16	(4)	43	(7)	67	(2)	92	(1)
17	(2)	44	(5)	68	(5)	93	(5)
18	(0)	45	(0)	69	(0)	94	(0)
19	(0)	46	(0)	73	(5)	95	(0)
28	(0)	47	(2)	74	(10)	100	(0)
30	(0)	48	(10)	75	(15)		
31	(5)	49	(0)	76	(5)		

( ) : Factory setting

[4] External input/output

Enter the usage of the external input/output on the control circuit board.

Terminal or connector on the circuit board	Function Name	Used	Not used	Connected device
TM2 [1] [2]	External control input	☐	☐	
TM2 [Y] [Z]	External control input	☐	☐	
TM3 [9] [10]	Monitor output	☐	☐	
CN17 [1] [2]	Fan speed 4 input	☐	☐	
CN17 [1] [3]	Fan speed 3 input	☐	☐	
CN17 [1] [4]	Fan speed 2 input	☐	☐	
CN17 [1] [5]	Fan speed 1 input	☐	☐	
CN23	Power for the CO_2 sensor	☐	☐	
CN26 [1] [2]	Bypass mode input	☐	☐	
CN26 [4] [5]	CO2 sensor input/0-10 V DC signal input	☐	☐	
CN26 [3] [5]	0-10 V DC signal input	☐	☐	
CN32	Remote/local switching	☐	☐	
CN34	LED on the CO_2 sensor control	☐	☐	
CN35	Malfunction of the CO_2 sensor input	☐	☐	
CN50	Monitor output PZ-4GS-E	☐	☐	
CN105	IT communication	☐	☐	