MITSUBISHI ELECTRIC

SPLIT-TYPE, HEAT PUMP AIR CONDITIONERS

June 2023

No. TCB031
REVISED EDITION-B

PARTS CATALOG

Series PLFY Ceiling Cassettes R410A

Indoor unit

[Model names]	[Service Ref.]
PLFY-P32VEM-A/-PA/-DA	PLFY-P32VEM-A/-PA/-DA.TH
PLFY-P40VEM-A/-PA/-DA	PLFY-P40VEM-A/-PA/-DA.TH
PLFY-P50VEM-A/-PA/-DA	PLFY-P50VEM-A/-PA/-DA.TH
PLFY-P63VEM-A/-PA/-DA	PLFY-P63VEM-A/-PA/-DA.TH
PLFY-P80VEM-A/-PA/-DA	PLFY-P80VEM-A/-PA/-DA.TH
PLFY-P100VEM-A/-PA/-DA	PLFY-P100VEM-A/-PA/-DA.TH
PLFY-P125VEM-A/-PA/-DA	PLFY-P125VEM-A/-PA/-DA.TH
PLFY-P140VEM-A/-PA/-DA	PLFY-P140VEM-A/-PA/-DA.TH

Revision:
- PLP-6EAB (-DA) have been added in REVISED EDITION-B.
- Some descriptions have been modified.

TCB031 REVISED EDITION-A is void.

Grille model

[Model names]	[Service Ref.]	
PLP-6EA	PLP-6EAR1	PLP-6EAR1-DA
PLP-6EAE	PLP-6EAER1	
PLP-6EAL	PLP-6EALR1	
PLP-6EALE	PLP-6EALER1	
PLP-6EAJ	PLP-6EAJ	
PLP-6EAJE	PLP-6EAJE	
PLP-6EALM	PLP-6EALM-DA	
PLP-6EALM2	PLP-6EALM2	
PLP-6EALME2	PLP-6EALME2	
PLP-6EALCM	PLP-6EALCM	PLP-6EALCM-DA
PLP-6EAMD	PLP-6EAMD	
PLP-6EAB	PLP-6EAB	PLP-6EAB-DA

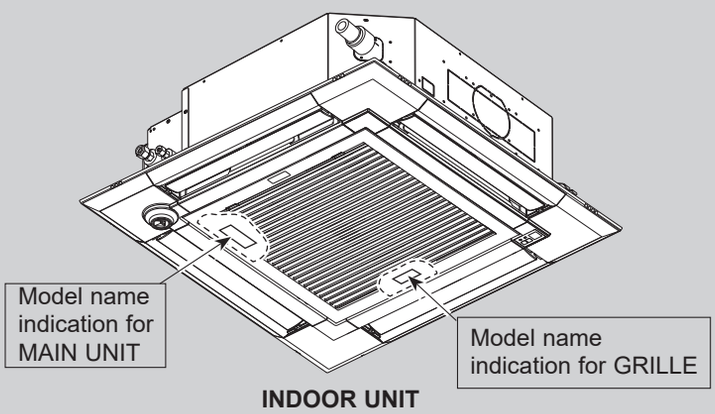

INDOOR UNIT

WIRELESS REMOTE CONTROLLER (Option)

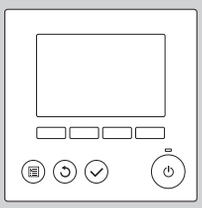

WIRED REMOTE CONTROLLER (Option)

CONTENTS

1. SERVICE PARTS LIST 2
2. OPTIONAL PARTS 9

SERVICE MANUAL (TCH031C)

CITY MULTI

1 SERVICE PARTS LIST

GRILLE PARTS
[Service Ref.]

PLP-6EAR1	PLP-6EAR1-DA	(Standard)
PLP-6EALR1		(Standard with signal receiver)
PLP-6EAER1		(Standard with i-see Sensor)
PLP-6EALER1		(Standard with signal receiver and i-see Sensor)
PLP-6EAJ		(Elevation)
PLP-6EAJE		(Elevation with i-see Sensor)
PLP-6EALM	PLP-6EALM-DA	(Standard with signal receiver and wireless remote controller)
PLP-6EALM2		(Standard with signal receiver and wireless remote controller)
PLP-6EALME2		(Standard with signal receiver, i-see Sensor, and wireless remote controller)
PLP-6EALCM	PLP-6EALCM-DA	(Standard with signal receiver and wireless remote controller)
PLP-6EAMD		(Standard with wired remote controller)
PLP-6EAB	PLP-6EAB-DA	(Black Panel)

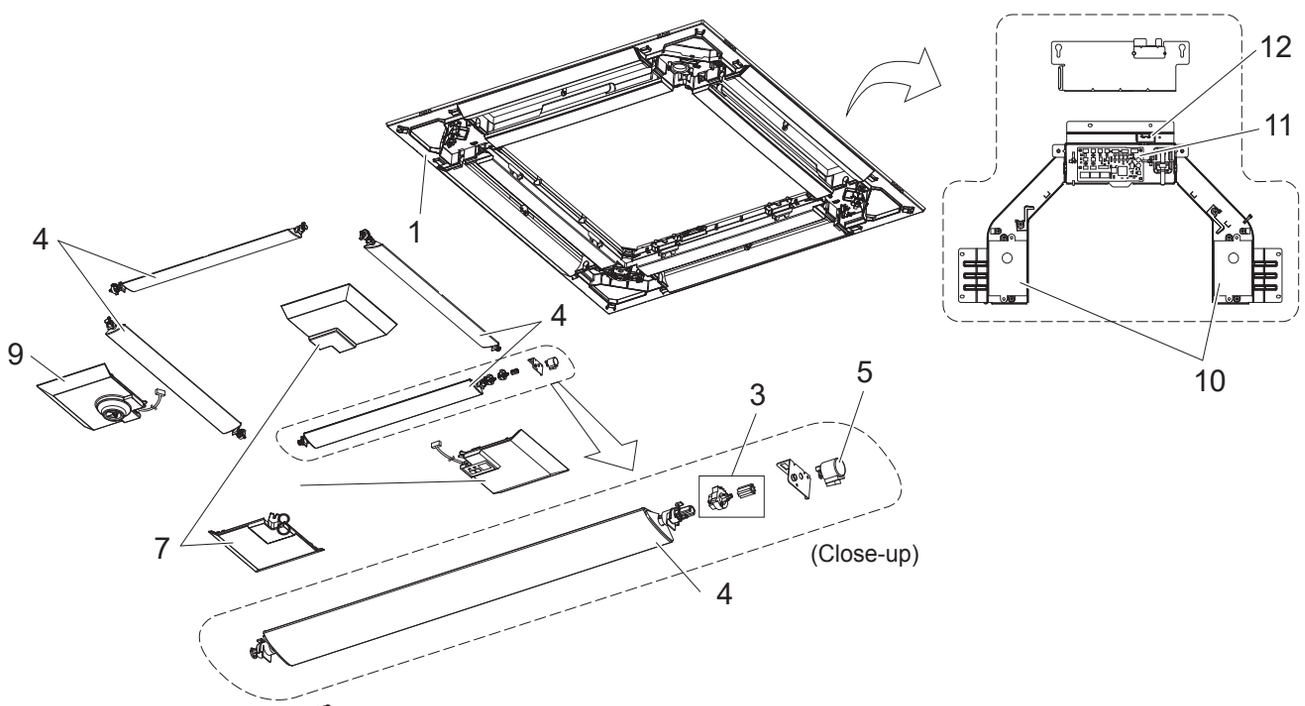

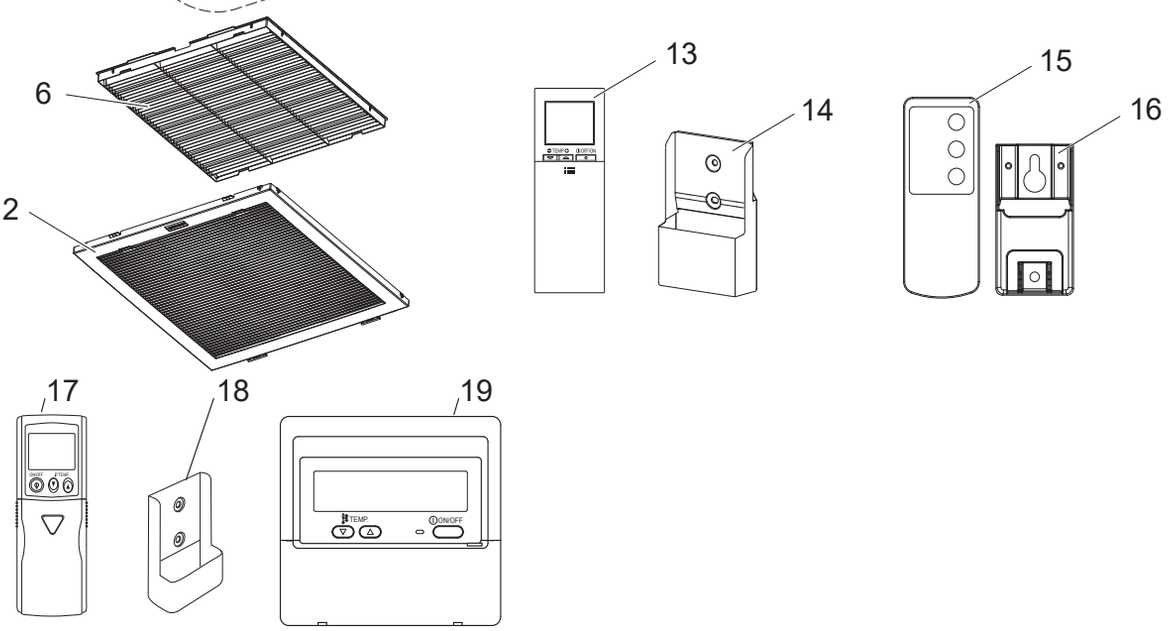

No.	Parts No.	Parts Name	Specification	PLP-6EAR1	PLP-6EAR1-DA	PLP-6EALR1	PLP-6EAER1	PLP-6EALER1	PLP-6EAJ	Wiring Diagram Symbol
1	E27 F85 003	AIR OUTLET GRILLE		1	1	1	1	1	1	
2	E27 F85 010	INTAKE GRILLE		1	1	1	1	1		
	E27 F91 010	INTAKE GRILLE							1	
3	E27 F85 031	GEAR (VANE&S/M)		4	4	4	4	4	4	
4	E27 F85 037	AUTO VANE&VANE BUSH		4	4	4	4	4	4	
5	E27 103 303	VANE MOTOR		4	4	4	4	4	4	MV
6	E27 F85 100	AIR FILTER		1	1	1	1	1	1	
7	E27 F85 975	CORNER PANEL		4	4	3	3	2	3	
8	E27 F88 975	CORNER PANEL (Signal receiver)				1		1	1	
9	E27 F86 975	CORNER PANEL (i-see Sensor)					1	1		
10	E27 F91 471	MOTOR BOX	2 pcs/set						2	
11	E27 F91 447	CONTROLLER BOARD							1	
12	E27 F91 316	LIMIT SWITCH							1	
13	E27 58G 426	WIRELESS REMOTE CONTROLLER	PAR-SL101A-E							
14	E27 D44 083	HOLDER	for PAR-SL101A-E							
15	E27 F91 426	WIRELESS REMOTE CONTROLLER	for Elevation panel						1	
16	E27 F91 083	HOLDER	for Elevation panel						1	

No.	Parts No.	Parts Name	Specification	Q'ty/unit							Wiring Diagram Symbol
				PLP-6EAJE	PLP-6EALM2	PLP-6EALM-DA	PLP-6EALME2	PLP-6EALCM	PLP-6EALCM-DA	PLP-6EAMD	
1	E27 F85 003	AIR OUTLET GRILLE		1	1	1	1	1	1	1	
2	E27 F85 010	INTAKE GRILLE			1	1	1	1	1	1	
	E27 F91 010			1							
3	E27 F85 031	GEAR (VANE&S/M)		4	4	4	4	4	4	4	
4	E27 F85 037	AUTO VANE&VANE BUSH		4	4	4	4	4	4	4	
5	E27 103 303	VANE MOTOR		4	4	4	4	4	4	4	MV
6	E27 F85 100	AIR FILTER		1	1	1	1	1	1	1	
7	E27 F85 975	CORNER PANEL		2	3	3	2	3	3	4	
8	E27 F88 975	CORNER PANEL (Signal receiver)		1	1	1	1	1	1		
9	E27 F86 975	CORNER PANEL (i-see Sensor)		1			1				
10	E27 F91 471	MOTOR BOX		2							
11	E27 F91 447	CONTROLLER BOARD		1							
12	E27 F91 316	LIMIT SWITCH		1							
13	E27 58G 426	WIRELESS REMOTE CONTROLLER	PAR-SL101A-E		1		1				
	E27 22L 426	WIRELESS REMOTE CONTROLLER	PAR-SL101A-E			1					
14	E27 D44 083	HOLDER	for PAR-SL101A-E		1	1	1				
15	E27 F91 426	WIRELESS REMOTE CONTROLLER	for Elevation panel	1							
16	E27 F91 083	HOLDER	for Elevation panel	1							
17	E27 P53 426	WIRELESS REMOTE CONTROLLER	PAR-SL97A-E					1	1		
18	E27 489 083	HOLDER	for PAR-SL97A-E					1	1		
19	E27 D28 426	WIRED REMOTE CONTROLLER	PAR-21MAA							1	

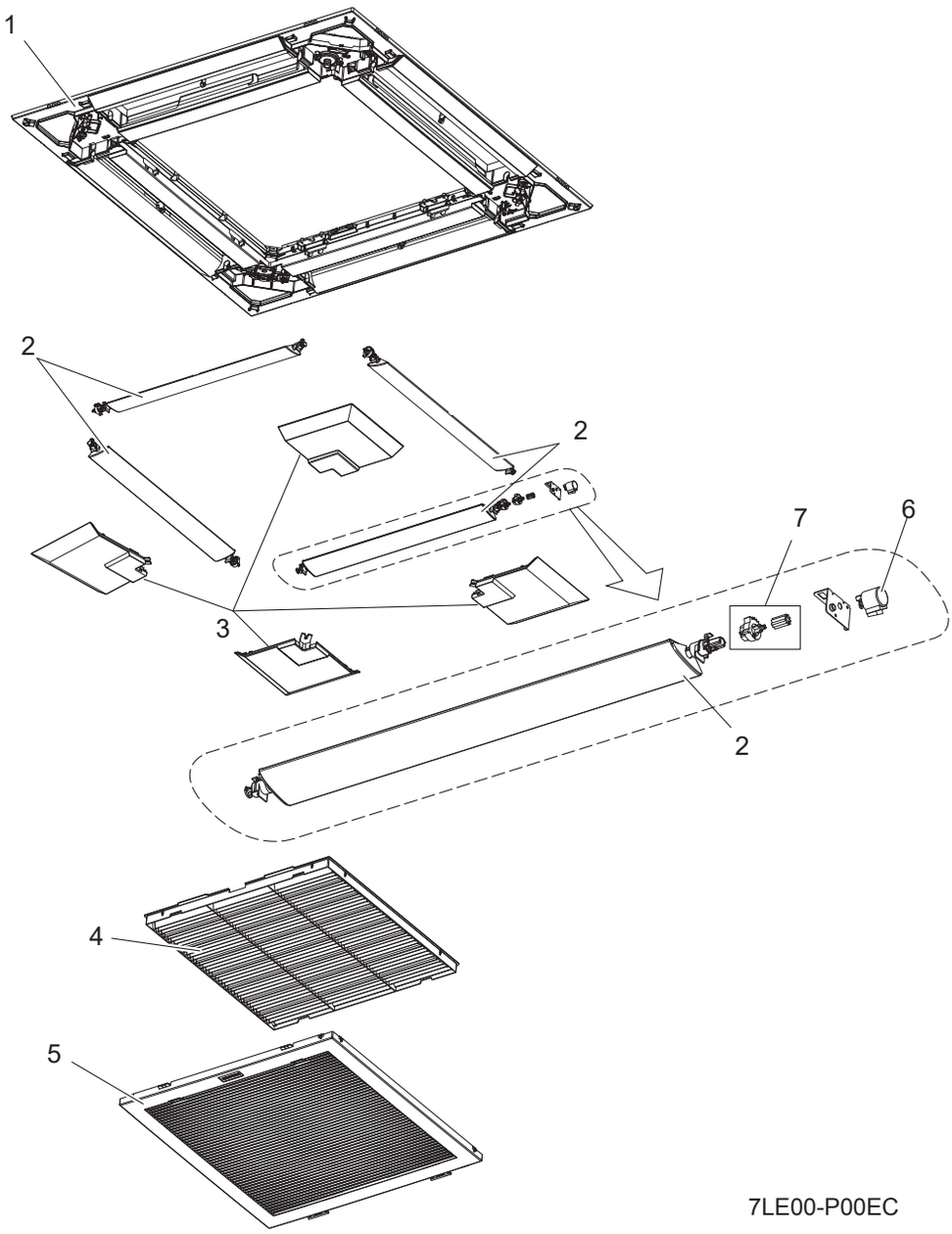

No.	Parts No.	Parts Name	PLP-6EAB	PLP-6EAB-DA	Wiring Diagram Symbol	Remarks	Remarks
1	T7W E24 003	PANEL ASSY	1				
1	T7W E25 003	PANEL ASSY		1			
2	T7W E15 002	VANE & BUSH ASSY	4	4			
3	T7W E14 638	CORNER PANEL	4	4			
4	T7W V01 500	L.L FILTER-V		1			
4	T7W E05 500	L.L FILTER	1				
5	T7W E17 691	INTAKE GRILLE	1	1			
6	R01 E19 223	STEPPING MOTOR	4	4	MV		
7	R01 E06 040	GEARS SET	4	4			

STRUCTURAL AND FUNCTIONAL PARTS

PLFY-P32VEM-A/-PA/-DA.TH
PLFY-P40VEM-A/-PA/-DA.TH
PLFY-P50VEM-A/-PA/-DA.TH
PLFY-P63VEM-A/-PA/-DA.TH
PLFY-P80VEM-A/-PA/-DA.TH
PLFY-P100VEM-A/-PA/-DA.TH
PLFY-P125VEM-A/-PA/-DA.TH
PLFY-P140VEM-A/-PA/-DA.TH

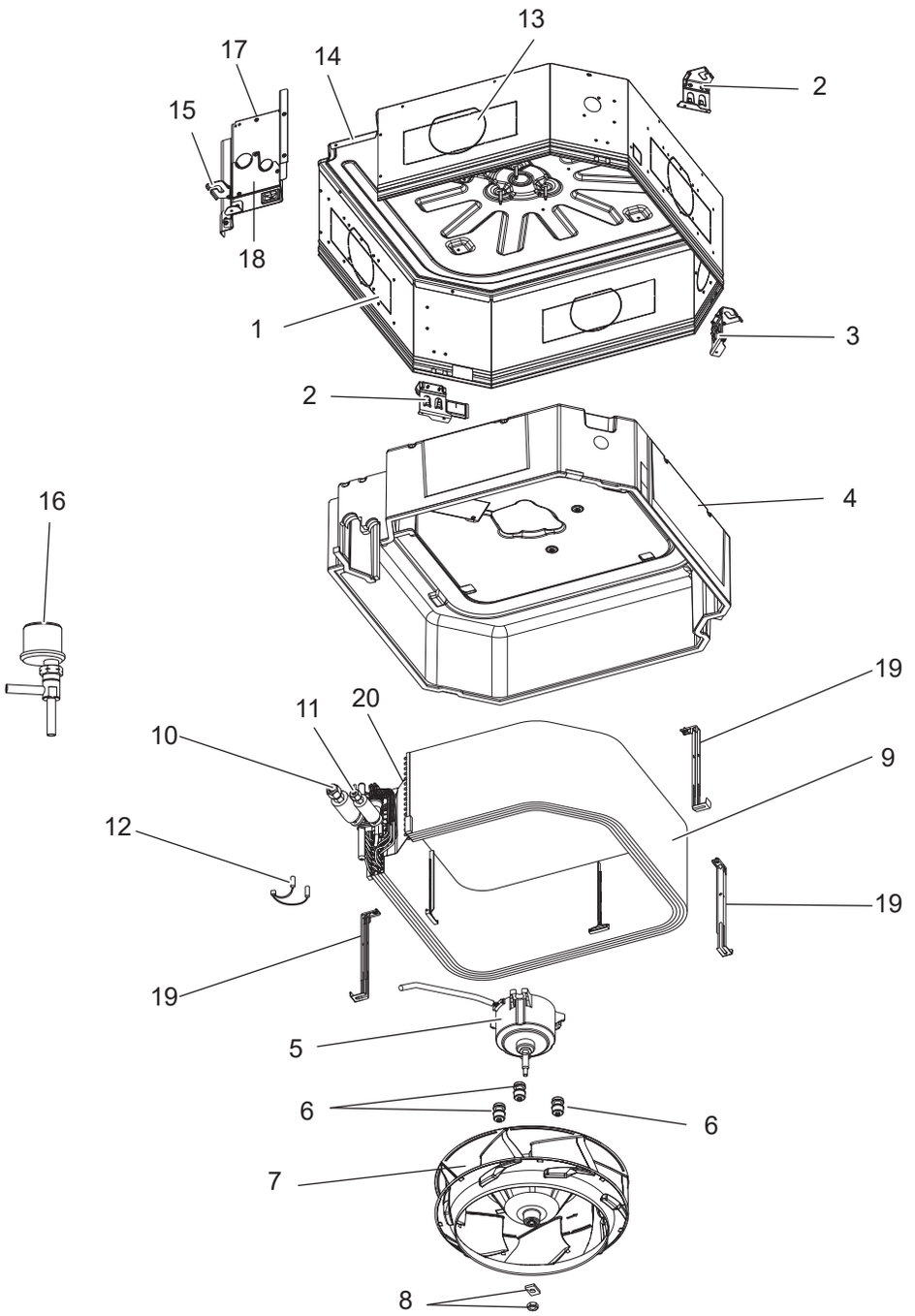

No.	Parts No.	Parts Name	Specification	Q'ty/unit PLFY-P·VEM-A/-PA/-DA.TH								Wiring Diagram Symbol
				32	40	50	63	80	100	125	140	
1	E27 K16 124	DRUM 2 ASSY		1	1	1	1	1				
	E27 K18 124	DRUM 2 ASSY							1	1	1	
2	E27 K15 808	LEG PUMP		2	2	2	2	2	2	2	2	
3	E27 K16 808	LEG FA		1	1	1	1	1	1	1	1	
4	E27 K15 092	INNER COVER ASSY-S		1	1	1	1	1				
	E27 K17 092	INNER COVER ASSY-L							1	1	1	
5	E27 K15 300	FAN MOTOR	(DC)-S	1	1	1	1	1				MF
	E27 K17 300	FAN MOTOR	(DC)-M						1	1	1	MF
6	E27 C12 105	MOTOR MOUNT		3	3	3	3	3	3	3	3	
7	E27 K15 502	TURBO FAN		1	1	1	1	1	1	1	1	
8	E27 K05 097	SPL WASHER / NUT	M8	1	1	1	1	1	1	1	1	
9	E27 M31 620	HEAT EXCHANGER		1								
	E27 M32 620	HEAT EXCHANGER			1	1						
	E27 M34 620	HEAT EXCHANGER					1					
	E27 M35 620	HEAT EXCHANGER						1				
	E27 M36 620	HEAT EXCHANGER							1			
	E27 M37 620	HEAT EXCHANGER								1		
	E27 20K 620	HEAT EXCHANGER									1	
10	E27 A56 660	FLARE NUT	1/2"	1	1	1						
	E27 A57 660	FLARE NUT	5/8"				1	1	1	1	1	
11	E27 J85 660	FLARE NUT	1/4"	1	1	1						
	E27 319 660	FLARE NUT	3/8"				1	1	1	1	1	
12	E27 K15 307	THERMISTOR		1	1	1	1	1	1	1	1	TH22, TH23
13	E27 K15 124	DRUM 1 ASSY		1	1	1	1	1				
	E27 K17 124	DRUM 1 ASSY							1	1	1	
14	E27 K15 290	BASE ASSY		1	1	1	1	1	1	1	1	
15	E27 K17 808	LEG PIPE		1	1	1	1	1	1	1	1	
16	E27 M31 640	LINEAR EXPANSION VALVE		1	1	1	1					LEV
	E27 M35 640	LINEAR EXPANSION VALVE						1	1	1		LEV
	E27 20K 640	LINEAR EXPANSION VALVE									1	LEV
17	E27 K15 006	COVER DRUM		1	1	1	1	1				
	E27 K16 006	COVER DRUM							1	1	1	
18	E27 K17 006	COVER DRUM U		1	1	1	1	1	1	1	1	
19	E27 K15 648	COIL SUPPORT		1	1	1						
	E27 K16 648	COIL SUPPORT					1	1				
	E27 K17 648	COIL SUPPORT							3	3		1 PCE/SET
	E27 K18 648	COIL SUPPORT									3	1 PCE/SET
20	E27 K15 711	COIL PLATE		1	1	1	1	1				
	E27 K17 711	COIL PLATE							1	1	1	

FUNCTIONAL AND ELECTRICAL PARTS

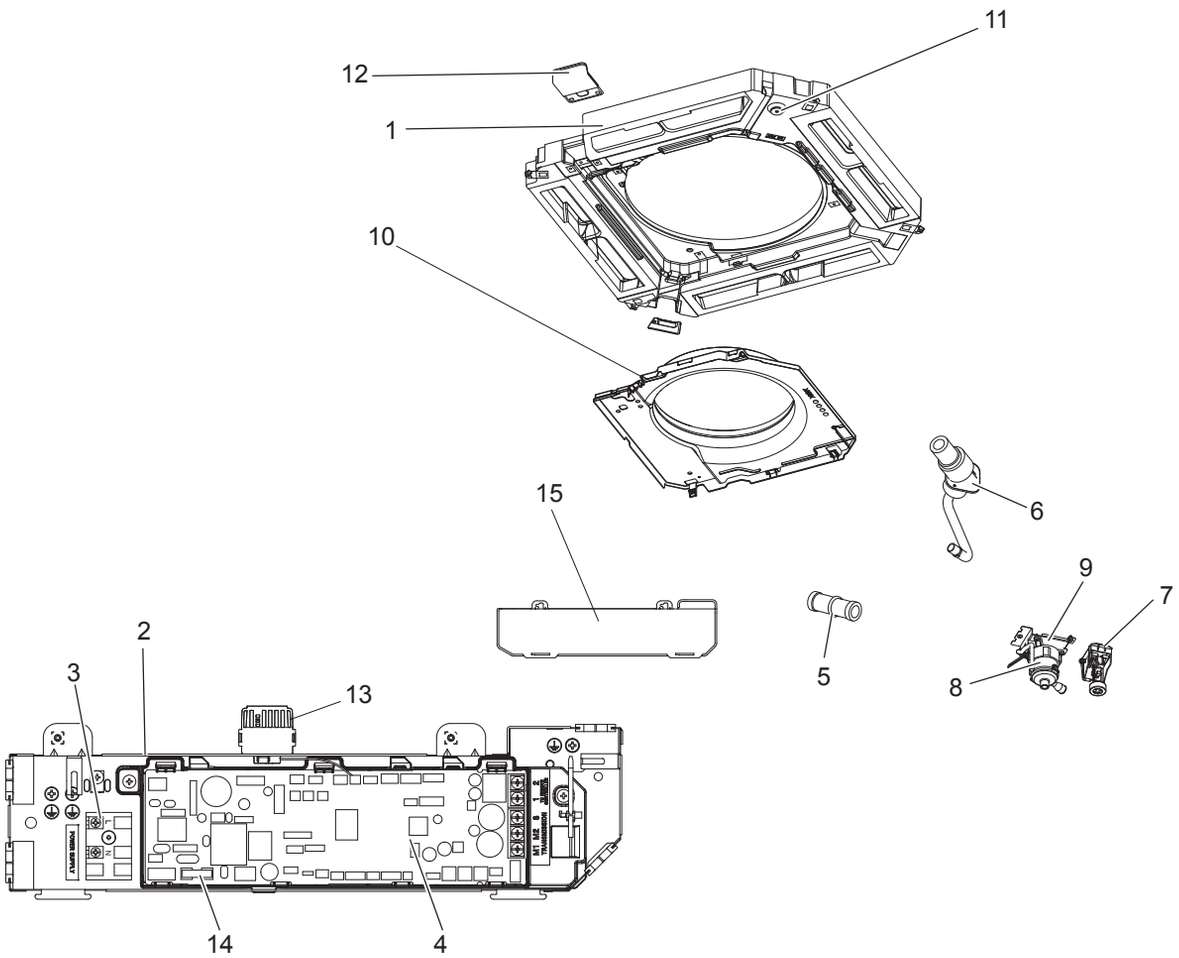

No.	Parts No.	Parts Name	Specification	Q'ty/unit PLFY-P·VEM-A/-PA/-DA.TH								Remarks (Drawing No.)	Wiring Diagram Symbol
				32	40	50	63	80	100	125	140		
1	E27 M31 700	DRAIN PAN		1	1	1	1	1	1	1	1		
2	E27 K15 777	ELECTRICAL CONTROL BOX		1	1	1	1	1	1	1	1		
3	E27 M31 375	TERMINAL BLOCK	2P (L,N)	1	1	1	1	1	1	1	1		TB2
4	E27 M31 447	INDOOR CONTROLLER BOARD		1	1	1	1	1	1	1			I.B
	E27 20K 447	INDOOR CONTROLLER BOARD									1		I.B
5	E27 580 704	DRAIN SOCKET		1	1	1	1	1	1	1	1	Accessory	
6	E27 K15 702	DRAIN HOSE ASSY		1	1	1	1	1	1	1	1		
7	E27 K15 145	FLOAT SWITCH ASSY		1	1	1	1	1	1	1	1		FS
8	E27 K15 355	DRAIN PUMP	220–240 V	1	1	1	1	1	1	1	1		DP
9	E27 K15 291	DRAIN PUMP BASE		1	1	1	1	1	1	1	1		
10	E27 M31 509	BELLMOUTH-S		1	1	1	1	1					
	E27 M36 509	BELLMOUTH-L							1	1	1		
11	E27 436 524	DRAIN PLUG		1	1	1	1	1	1	1	1		
12	E27 K15 091	WIRE COVER		1	1	1	1	1	1	1	1		
13	E27 K15 308	ROOM TEMP. THERMISTOR	220XAP	1	1	1	1	1	1	1	1		TH21
14	E27 648 382	FUSE	6.3A 250V AC	1	1	1	1	1	1	1	1		
15	E27 K17 449	CONTROLLER COVER		1	1	1	1	1	1	1	1		

2 OPTIONAL PARTS

Parts name	Parts No.
SPACE PANEL	PAC-SJ65AS-E
AIR OUTLET SHUTTER PLATE	PAC-SJ37SP-E
WIRED REMOTE CONTROLLER (MA REMOTE CONTROLLER)	PAR-32/33MAA
WIRED REMOTE CONTROLLER (MA REMOTE CONTROLLER)	PAR-U02MEDA PAR-21MAA
WIRED REMOTE CONTROLLER (SIMPLE MA REMOTE CONTROLLER)	PAC-YT52CRA
WIRELESS REMOTE CONTROLLER	PAR-SL101A-E PAR-SL97A-E
WIRELESS REMOTE CONTROLLER	PAR-FL32MA
HIGH EFFICIENCY FILTER ELEMENT	PAC-SH59KF-E
MULTI-FUNCTIONAL CASEMENT	PAC-SJ41TM-E
FLANGE FOR FRESH AIR INTAKE	PAC-SH65OF-E
MA & CONTACT TERMINAL INTERFACE	MAC-397IF-E
REMOTE SENSOR	PAC-SE41TS-E
Wi-Fi INTERFACE	MAC-557IF-E MAC-568IF-E
REMOTE ON/OFF ADAPTER	PAC-SE55RA-E
REMOTE DISPLAY ADAPTER	PAC-SA88HA-E
GRILLE (i-see Sensor)	PLP-6EAE, PLP-6EAER1
GRILLE (i-see Sensor with signal receiever)	PLP-6EALE, PLP-6EALER1
GRILLE (i-see Sensor with receiver and wireless remote controller)	PLP-6EALME2
GRILLE (Standard)	PLP-6EA, PLP-6EAR1
GRILLE (Standard with signal receiver)	PLP-6EAL, PLP-6EALR1
GRILLE (Standard with receiver and wireless remote controller)	PLP-6EALM2
GRILLE (Automatic filter elevation without i-see Sensor)	PLP-6EAJ
GRILLE (Automatic filter elevation with i-see Sensor)	PLP-6EAJE
GRILLE (Standard with wired remote controller PAR-21MAA)	PLP-6EAMD
GRILLE (Standard with receiver and wireless remote controller PAR-SL97A-E)	PLP-6EALCM
GRILLE (Black Panel)	PLP-6EAB
i-SEE SENSOR CORNER PANEL	PAC-SE1ME-E
SIGNAL RECEIVER CORNER PANEL	PAR-SE9FA-E

CITY MULTI

MITSUBISHI ELECTRIC CORPORATION

HEAD OFFICE : TOKYO BUILDING, 2-7-3, MARUNOUCHI, CHIYODA-KU, TOKYO 100-8310, JAPAN

MITSUBISHI ELECTRIC CONSUMER PRODUCTS (THAILAND) CO., LTD.
700/406 MOO 7, TAMBON DON HUA ROH,
AMPHUR MUANG, CHONBURI 20000 THAILAND
Issued : Jun. 2023. No. TCB031 REVISED EDITION-B
Issued : Nov. 2021. No. TCB031 REVISED EDITION-A
Published : Dec. 2018. No. TCB031
Made in Thailand

Specifications are subject to change without notice.