AIR CONDITIONERS

2026

R32/R454B

TECHNICAL & SERVICE MANUAL

Model name

<Indoor unit>

TPEFYP006MA1M0A, TPEFYP008MA1M0A, TPEFYP012MA1M0A, TPEFYP015MA1M0A, TPEFYP018MA1M0A, TPEFYP024MA1M0A, TPEFYP027MA1M0A, TPEFYP030MA1M0A, TPEFYP036MA1M0A, TPEFYP048MA1M0A, TPEFYP054MA1M0A

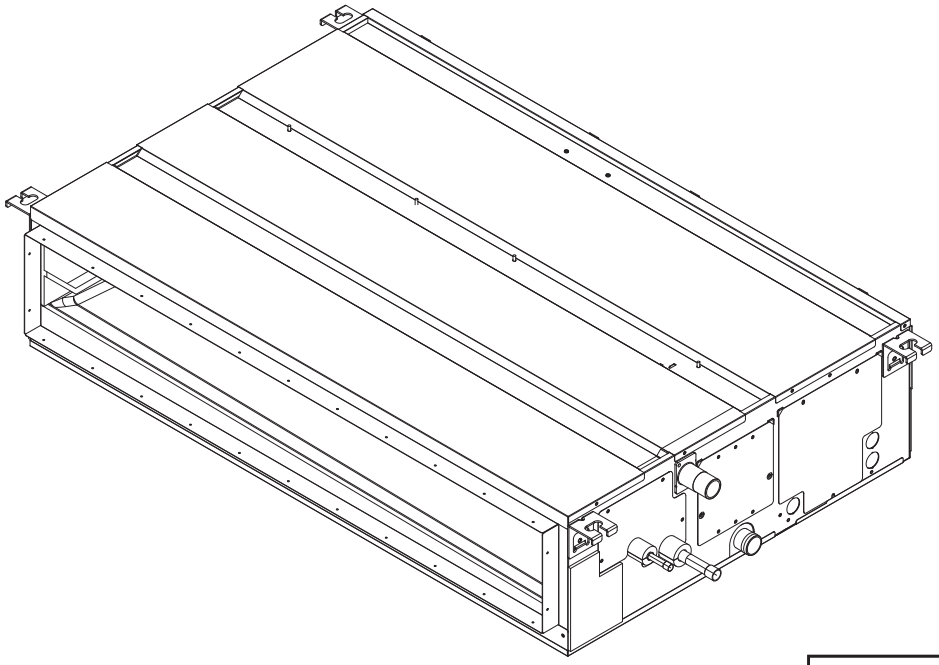

2nd edition

Safety Precautions

MEANINGS OF SYMBOLS DISPLAYED ON THE UNIT

Refrigerant Safety Group A2L	**WARNING** (Risk of fire)	This unit uses flammable refrigerant. If refrigerant leaks and comes in contact with fire or heating part, it will create harmful gas and there is risk of fire.
	Read the OPERATION MANUAL carefully before operation.	
	Service personnel are required to carefully read the OPERATION MANUAL and INSTALLATION MANUAL before operation.	
	Further information is available in the OPERATION MANUAL, INSTALLATION MANUAL, and the like.	

Always observe for safety

Before obtaining access to terminal, all supply circuits must be disconnected.

Cautions related to new refrigerant

Cautions for units utilizing refrigerant R32/R454B

Do not use the existing refrigerant piping.

The old refrigerant and lubricant in the existing piping contains a large amount of chlorine which may cause the lubricant deterioration of the new unit.

Make sure that the inside and outside of refrigerant piping is clean and it has no contaminants such as sulfur, oxides, dirt, shaving particles, etc., which are hazard to refrigerant cycle.
In addition, use pipes with specified thickness.

Contamination inside refrigerant piping can cause deterioration of refrigerant oil, etc.

Store the piping indoors, and keep both ends of the piping sealed until just before brazing.
(Leave elbow joints, etc. in their packaging.)

If dirt, dust or moisture enters into refrigerant cycle, that can cause deterioration of refrigerant oil or malfunction of compressor.

The refrigerant oil applied to flare and flange connections must be ester oil, ether oil or alkylbenzene oil in a small amount.

If large amount of mineral oil enters, that can cause deterioration of refrigerant oil, etc.

Charge refrigerant from liquid phase of gas cylinder.

If the refrigerant is charged from gas phase, composition change may occur in refrigerant and the efficiency will be lowered.

Ventilate the room if refrigerant leaks during operation.
If refrigerant comes into contact with a flame, poisonous gases will be released.

Use a vacuum pump with a reverse flow check valve.

Vacuum pump oil may flow back into refrigerant cycle and that can cause deterioration of refrigerant oil, etc.

Use the following tools specifically designed for use with R32/R454B refrigerant.

The following tools are necessary to use R32/R454B refrigerant.

Tools for R32/R454B	
Gauge manifold	Charging hose
Gas leak detector	Check valve
Refrigerant charge base	Vacuum gauge
Refrigerant recovery equipment	–

Handle tools with care.

If dirt, dust or moisture enters into refrigerant cycle, that can cause deterioration of refrigerant oil or malfunction of compressor.

Do not use a charging cylinder.

If a charging cylinder is used, the composition of refrigerant will change and the efficiency will be lowered.

Use the specified refrigerant only.

Never use any refrigerant other than that specified.
Doing so may cause a burst, an explosion, or fire when the unit is being used, serviced, or disposed of.
Correct refrigerant is specified on name plate of outdoor unit.
If other refrigerant (R22, etc.) is used, chlorine in refrigerant can cause deterioration of refrigerant oil, etc.
We will not be held responsible for mechanical failure, system malfunction, unit breakdown or accidents caused by failure to follow the instructions.

[1] Warning for service

This unit is equipped with a leak detection system for safety. To enable the leak detection, the unit must be turned on all the time after installation, except during servicing. Aerosol spray may lead to a false detection of the refrigerant sensor.

(1) Do not alter the unit.
(2) For installation and relocation work, follow the instructions in the Installation Manual and use tools and pipe components specifically made for use with refrigerant specified in the outdoor unit installation manual.
(3) Ask a dealer or an authorized technician to install, relocate and repair the unit.
(4) This unit should be installed in rooms which exceed the floor space specified in outdoor unit installation manual. Refer to outdoor unit installation manual.
(5) Install the indoor unit at least 2.5 m above floor or grade level.
(6) All field joints shall be accessible for inspection prior to being covered or enclosed.
(7) If the air conditioner is installed in a small room or closed room, measures must be taken to prevent the refrigerant concentration in the room from exceeding the safety limit in the event of refrigerant leakage. Should the refrigerant leak and cause the concentration limit to be exceeded, hazards due to lack of oxygen in the room may result.
(8) Keep gas-burning appliances, electric heaters, and other fire sources (ignition sources) away from the location where installation, repair, and other air conditioner work will be performed.
If refrigerant comes into contact with a flame, poisonous gases will be released.
(9) When installing or relocating, or servicing the air conditioner, use only the specified refrigerant written on outdoor unit to charge the refrigerant lines.
Do not mix it with any other refrigerant and do not allow air to remain in the lines.
If air is mixed with the refrigerant, then it can be the cause of abnormal high pressure in the refrigerant line, and may result in an explosion and other hazards.
(10) After installation has been completed, check for refrigerant leaks. If refrigerant leaks into the room and comes into contact with the flame of a heater or portable cooking range, poisonous gases will be released.
(11) When a FLAMMABLE REFRIGERANT is used, alloys used indoors to join refrigerant containing connections shall have a melting point (liquidus temperature) greater than 427 °C (801 °F).
(12) When performing brazing work, be sure to ventilate the room sufficiently. Make sure that there are no hazardous or flammable materials nearby.
When performing the work in a closed room, small room, or similar location, make sure that there are no refrigerant leaks before performing the work.
If refrigerant leaks and accumulates, it may ignite or poisonous gases may be released.
(13) Do not install the unit in places where refrigerant may build-up or places with poor ventilation such as a semi-basement or a sunken place in outdoor: Refrigerant is heavier than air, and inclined to fall away from the leak source.
(14) Do not use means to accelerate the defrosting process or to clean, other than those recommended by the manufacturer.
(15) The appliance shall be stored in a room without continuously operating ignition sources (for example: open flames, an operating gas appliance or an operating electric heater).
(16) Do not pierce or burn.
(17) Be aware that refrigerants may not contain an odor.
(18) Pipe-work shall be protected from physical damage.
(19) The installation of pipe-work shall be kept to a minimum.
(20) Compliance with national gas regulations shall be observed.
(21) Keep any required ventilation openings clear of obstruction.
(22) Servicing shall be performed only as recommended by the manufacturer.
(23) The appliance shall be stored in a well-ventilated area where the room size corresponds to the room area as specified for operation.
(24) Maintenance, service and repair operations shall be performed by authorized technician with required qualification.
(25) Do not use refrigerant other than the type indicated in the manuals provided with the unit and on the nameplate. Doing so may cause the unit or pipes to burst, or result in explosion or fire during use, during repair, or at the time of disposal of the unit. It may also be in violation of applicable laws. MITSUBISHI ELECTRIC CORPORATION cannot be held responsible for malfunctions or accidents resulting from the use of the wrong type of refrigerant.
(26) Properly install the unit on a surface that can withstand its weight. Unit installed on an unstable surface may fall and cause injury.
(27) Only use specified cables. Securely connect each cable so that the terminals do not carry the weight of the cable. Improperly connected cables may produce heat and start a fire.
(28) Take appropriate safety measures against wind gusts and earthquakes to prevent the unit from toppling over. Improper installation may cause the unit to topple over and cause injury or damage to the unit.
(29) Only use accessories (i.e., air cleaners, humidifiers, electric heaters) recommended by MITSUBISHI ELECTRIC CORPORATION.
(30) Do not touch the heat exchanger fins with bare hands. The fins are sharp and pose a risk of cuts.
(31) Have all electrical work performed by an authorized electrician according to the local regulations and the instructions in this manual. Use a dedicated circuit. Insufficient power supply capacity or improper installation of the unit may result in malfunctions of the unit, electric shock, or fire.

(32) Keep electrical parts away from water. Wet electrical parts pose a risk of electric shock, smoke, or fire.
(33) Securely attach the control box cover. If the cover is not installed properly, dust or water may infiltrate and pose a risk of electric shock, smoke, or fire.
(34) Do not try to defeat the safety features of the unit. Forced operation of the pressure switch or the temperature switch by defeating the safety features for these devices, or the use of accessories other than the ones that are recommended by MITSUBISHI ELECTRIC CORPORATION may result in smoke, fire, or explosion.
(35) Consult your dealer for proper disposal method.
(36) Do not use a leak detection additive.

[2] Cautions for service

When using aerosol sprays for interior construction, finishing work, or sealing piping penetrations, turn off the breaker and ensure proper ventilation.
(1) Perform service after recovering the refrigerant left in unit completely.
(2) Do not release refrigerant in the air.
(3) After completing service, charge the cycle with specified amount of refrigerant.
(4) When performing service, install a filter drier simultaneously.
Be sure to use a filter drier for new refrigerant.

[3] Additional refrigerant charge

When charging directly from cylinder
(1) Check that cylinder for R454B available on the market is a syphon type.
(2) Charging should be performed with the cylinder of syphon stood vertically. (Refrigerant is charged from liquid phase.)

[4] Cautions for unit using R32/R454B refrigerant

Basic work procedures are the same as those for conventional units using refrigerant R410A. However, pay careful attention to the following points:
(1) Information on servicing
(1-1) Checks on the area
Prior to beginning work on systems containing FLAMMABLE REFRIGERANTS, safety checks are necessary to ensure that the risk of ignition is minimized.
For repair to the REFRIGERATING SYSTEM, (1-2) to (1-6) shall be completed prior to conducting work on the system.
(1-2) Work procedure
Work shall be undertaken under a controlled procedure so as to minimize the risk of a flammable gas or vapor being present while the work is being performed.
(1-3) General work area
All maintenance staff and others working in the local area shall be instructed on the nature of work being carried out.
Work in confined spaces shall be avoided.
(1-4) Checking for presence of refrigerant
The area shall be checked with an appropriate refrigerant detector prior to and during work, to ensure the technician is aware of potentially toxic or flammable atmospheres. Ensure that the leak detection equipment being used is suitable for use with all applicable refrigerants, i.e. non-sparking, adequately sealed or intrinsically safe.
(1-5) Presence of fire extinguisher
If any hot work is to be conducted on the refrigerating equipment or any associated parts, appropriate fire extinguishing equipment shall be available to hand.
Have a dry powder or CO_2 fire extinguisher adjacent to the charging area.
(1-6) No ignition sources
No person carrying out work in relation to a REFRIGERATING SYSTEM which involves exposing any pipe work shall use any sources of ignition in such a manner that it may lead to the risk of fire or explosion.
All possible ignition sources, including cigarette smoking, should be kept sufficiently far away from the site of installation, repairing, removing and disposal, during which refrigerant can possibly be released to the surrounding space.
Prior to work taking place, the area around the equipment is to be surveyed to make sure that there are no flammable hazards or ignition risks. "No Smoking" signs shall be displayed.
(1-7) Ventilated area
Ensure that the area is in the open or that it is adequately ventilated before breaking into the system or conducting any hot work. A degree of ventilation shall continue during the period that the work is carried out.
The ventilation should safely disperse any released refrigerant and preferably expel it externally into the atmosphere.
(1-8) Checks on the refrigeration equipment
Where electrical components are being changed, they shall be fit for the purpose and to the correct specification.
At all times the manufacturer's maintenance and service guidelines shall be followed.
If in doubt, consult the manufacturer's technical department for assistance.
The following checks shall be applied to installations using FLAMMABLE REFRIGERANTS:
- the actual REFRIGERANT CHARGE is in accordance with the room size within which the refrigerant containing parts are installed;
- the ventilation machinery and outlets are operating adequately and are not obstructed;
- marking to the equipment continues to be visible and legible. Markings and signs that are illegible shall be corrected;

- refrigerating pipe or components are installed in a position where they are unlikely to be exposed to any substance which may corrode refrigerant containing components, unless the components are constructed of materials which are inherently resistant to being corroded or are suitably protected against being so corroded.

(1-9) Checks on electrical devices

Repair and maintenance to electrical components shall include initial safety checks and component inspection procedures.

If a fault exists that could compromise safety, then no electrical supply shall be connected to the circuit until it is satisfactorily dealt with. If the fault cannot be corrected immediately but it is necessary to continue operation, an adequate temporary solution shall be used. This shall be reported to the owner of the equipment so all parties are advised.

Initial safety checks shall include:

- that capacitors are discharged: this shall be done in a safe manner to avoid possibility of sparking;
- that no live electrical components and wiring are exposed while charging, recovering or purging the system;
- that there is continuity of earth bonding.

(2) Repairs to sealed components

Sealed electrical components shall be replace

(3) Repair to intrinsically safe components

Intrinsically safe components must be replaced.

(4) Cabling

Check that cabling will not be subject to wear, corrosion, excessive pressure, vibration, sharp edges or any other adverse environmental effects.

The check shall also take into account the effects of aging or continual vibration from sources such as compressors or fans.

(5) Detection of flammable refrigerants

Under no circumstances shall potential sources of ignition be used in the searching for or detection of refrigerant leaks.

A halide torch (or any other detector using a naked flame) shall not be used.

The following leak detection methods are deemed acceptable for all refrigerant systems.

Electronic leak detectors may be used to detect refrigerant leaks but, in the case of FLAMMABLE REFRIGERANTS, the sensitivity may not be adequate, or may need re-calibration. (Detection equipment shall be calibrated in a refrigerant-free area.) Ensure that the detector is not a potential source of ignition and is suitable for the refrigerant used.

Leak detection equipment shall be set at a percentage of the LFL of the refrigerant and shall be calibrated to the refrigerant employed, and the appropriate percentage of gas (25 % maximum) is confirmed.

Leak detection fluids are also suitable for use with most refrigerants but the use of detergents containing chlorine shall be avoided as the chlorine may react with the refrigerant and corrode the copper pipe-work.

If a leak is suspected, all naked flames shall be removed/extinguished.

If a leakage of refrigerant is found which requires brazing, all of the refrigerant shall be recovered from the system, or isolated (by means of shut off valves) in a part of the system remote from the leak. Removal of refrigerant shall be according to (6).

(6) Removal and evacuation

When breaking into the refrigerant circuit to make repairs - or for any other purpose -conventional procedures shall be used. However, for flammable refrigerants it is important that best practice be followed, since flammability is a consideration. The following procedure shall be adhered to:

- safely remove refrigerant following local and national regulations;
- evacuate;
- purge the circuit with inert gas;
- evacuate;
- continuously flush or purge with inert gas when using flame to open circuit;
- open the circuit.

The refrigerant charge shall be recovered into the correct recovery cylinders if venting is not allowed by local and national codes. For appliances containing flammable refrigerants, the system shall be purged with oxygen-free nitrogen to render the appliance safe for flammable refrigerants. This process might need to be repeated several times.

Compressed air or oxygen shall not be used for purging refrigerant systems.

For appliances containing flammable refrigerants, refrigerants purging shall be achieved by breaking the vacuum in the system with oxygen-free nitrogen and continuing to fill until the working pressure is achieved, then venting to atmosphere, and finally pulling down to a vacuum.

This process shall be repeated until no refrigerant is within the system. When the final oxygen-free nitrogen charge is used, the system shall be vented down to atmospheric pressure to enable work to take place.

The outlet for the vacuum pump shall not be close to any potential ignition sources, and ventilation shall be available.

(7) Charging procedures

In addition to conventional charging procedures, the following requirements shall be followed:

- Ensure that contamination of different refrigerants does not occur when using charging equipment. Hoses or lines shall be as short as possible to minimize the amount of REFRIGERANT contained in them.
- Cylinders shall be kept in an appropriate position according to the instructions.
- Ensure that the REFRIGERATING SYSTEM is earthed prior to charging the system with refrigerant.
- Label the system when charging is complete (if not already).
- Extreme care shall be taken not to overfill the REFRIGERATING SYSTEM.

Prior to recharging the system, it shall be pressure-tested with the appropriate purging gas. The system shall be leak tested on completion of charging but prior to commissioning.

A follow up leak test shall be carried out prior to leaving the site.

(8) Decommissioning

Before carrying out this procedure, it is essential that the technician is completely familiar with the equipment and all its detail. It is recommended good practice that all refrigerants are recovered safely.

Prior to the task being carried out, an oil and refrigerant sample shall be taken in case analysis is required prior to re-use of recovered refrigerant. It is essential that electrical power is available before the task is commenced.

a) Become familiar with the equipment and its operation

b) Isolate system electrically.

c) Before attempting the procedure, ensure that:

- mechanical handling equipment is available, if required, for handling refrigerant cylinders;
- all personal protective equipment is available and being used correctly;
- the recovery process is supervised at all times by a competent person;
- recovery equipment and cylinders conform to the appropriate standards.

d) Pump down refrigerant system, if possible.

e) If a vacuum is not possible, make a manifold so that refrigerant can be removed from various parts of the system.

f) Make sure that cylinder is situated on the scales before recovery takes place.

g) Start the recovery machine and operate in accordance with instructions.

h) Do not overfill cylinders (no more than 80 % volume liquid charge).

i) Do not exceed the maximum working pressure of the cylinder, even temporarily.

j) When the cylinders have been filled correctly and the process completed, make sure that the cylinders and the equipment are removed from site promptly and all isolation valves on the equipment are closed off.

k) Recovered refrigerant shall not be charged into another REFRIGERATING SYSTEM unless it has been cleaned and checked.

(9) Labelling

Equipment shall be labelled stating that it has been de-commissioned and emptied of refrigerant.

The label shall be dated and signed. For appliances containing FLAMMABLE REFRIGERANTS, ensure that there are labels on the equipment stating the equipment contains FLAMMABLE REFRIGERANT.

(10) Recovery

When removing refrigerant from a system, either for servicing or decommissioning, it is recommended good practice that all refrigerants are removed safely.
When transferring refrigerant into cylinders, ensure that only appropriate refrigerant recovery cylinders are employed.
Ensure that the correct number of cylinders for holding the total system charge is available.
All cylinders to be used are designated for the recovered refrigerant and labelled for that refrigerant (i.e. special cylinders for the recovery of refrigerant). Cylinders shall be complete with pressure-relief valve and associated shut-off valves in good working order.
Empty recovery cylinders are evacuated and, if possible, cooled before recovery occurs.
The recovery equipment shall be in good working order with a set of instructions concerning the equipment that is at hand and shall be suitable for the recovery of the flammable refrigerant.
If in doubt, the manufacturer should be consulted. In addition, a set of calibrated weighing scales shall be available and in good working order. Hoses shall be complete with leak-free disconnect couplings and in good condition.
The recovered refrigerant shall be processed according to local legislation in the correct recovery cylinder, and the relevant waste transfer note arranged. Do not mix refrigerants in recovery units and especially not in cylinders.
If compressors or compressor oils are to be removed, ensure that they have been evacuated to an acceptable level to make certain that flammable refrigerant does not remain within the lubricant.
The compressor body shall not be heated by an open flame or other ignition sources to accelerate this process. When oil is drained from a system, it shall be carried out safely.

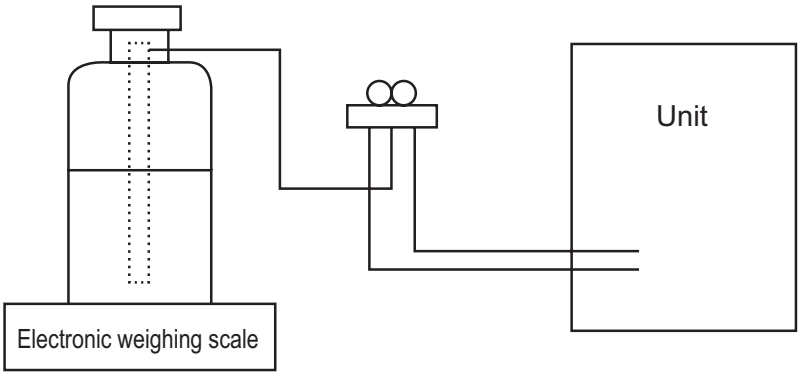

[5] Service tools

Use the below service tools as exclusive tools for R32/R454B refrigerant.

No.	Tool name	Specifications
1	Gauge manifold	♦Only for R32/R454B
		♦Use the existing fitting specifications. (UNF1/2)
		♦Use high-tension side pressure of 768.7 PSIG [5.3 MPaG] or over.
2	Charge hose	♦Only for R32/R454B
		♦Use pressure performance of 738.2 PSIG [5.09 MPaG] or over.
3	Electronic weighing scale	–
4	Gas leak detector	♦Use the detector for R32/R454B
5	Adaptor for reverse flow check	♦Attach on vacuum pump.
6	Refrigerant charge base	–
7	Refrigerant cylinder	♦Only for R32/R454B ♦Cylinder with syphon
8	Refrigerant recovery equipment	–

Cautions related to heater

- ♦Exercise caution when using any auxiliary heat source and follow all third party manufacturer instructions and safety guidelines for installation and usage.
- ♦Any auxiliary heat source connected to this unit via the CN24 connection must have an independent temperature control mechanism. Failure to install and maintain such temperature control mechanism may void the warranty for this unit.
- ♦Mitsubishi Electric Trane HVAC US LLC shall not bear any warranty obligation or other liability for any damage or loss in connection with such third party auxiliary heaters.

CONTENTS

I Features
[1] Features 1

II Components and Functions
[1] Components and Functions 2

III Specifications
[1] Specifications 5
1.Specifications 5
2.Electrical component specifications 8

IV Outlines and Dimensions
[1] Outlines and Dimensions 10

V Wiring Diagram
[1] Wiring Diagram 12

VI Refrigerant System Diagram
[1] Refrigerant system diagram 13

VII Microprocessor Control
[1] Microprocessor Control 14
1.Cool operation 14
2.Drying operation 16
3.Fan operation 17
4.Heat operation 18
5.Auto operation [Automatic Cool / Heat change over operation] 19
6.When unit is stopped control mode 20
7.Heater control 21

VIII Wiring for interlock between the refrigerant leak sensor output and local equipment
[1] Wiring for interlock between the refrigerant leak sensor output and local equipment 28

IX Troubleshooting
[1] Troubleshooting 29
1.Check methods 29
2.DC fan motor (fan motor/indoor control board) 34
3.Address switch setting 35
4.Voltage test points on the control board 36
5.Switch setting (Factory setting) 37

X Disassembly Procedure
[1] Disassembly Procedure 41
1.Control box 41
2.Thermistor (Intake air) 42
3.Drain pump 42
4.R32/R454B sensor 43
5.Drain pan 44
6.LEV 45
7.Thermistor (Gas pipe) (Liquid pipe) 46
8.Fan and fan motor 47
9.Heat exchanger 48

XI Inspection and maintenance
[1] Inspection and maintenance 49
1.Guideline for preventive maintenance 49
2.Recommended parts inspection interval 50

[1] Features

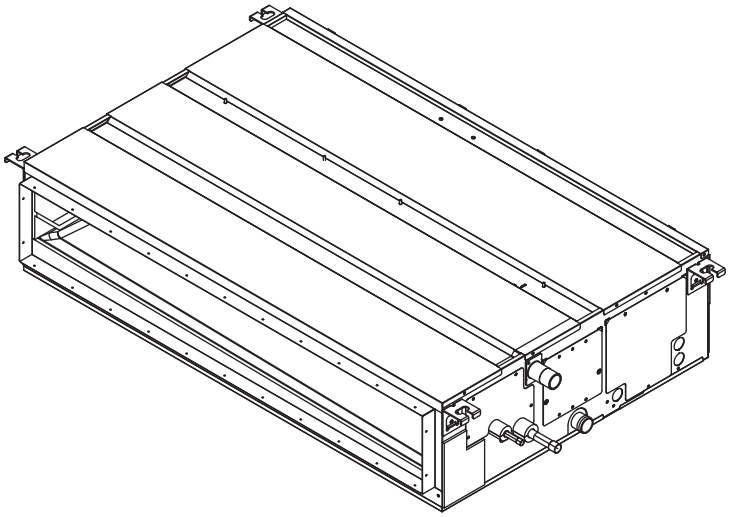

Model	Cooling capacity/Heating capacity	
	BTU/h	kW
TPEFYP006MA1M0A	6000/6700	1.8/2.0
TPEFYP008MA1M0A	8000/9000	2.3/2.6
TPEFYP012MA1M0A	12000/13500	3.5/4.0
TPEFYP015MA1M0A	15000/17000	4.4/5.0
TPEFYP018MA1M0A	18000/20000	5.3/5.9
TPEFYP024MA1M0A	24000/27000	7.0/7.9
TPEFYP027MA1M0A	27000/30000	7.9/8.8
TPEFYP030MA1M0A	30000/34000	8.8/10.0
TPEFYP036MA1M0A	36000/40000	10.6/11.7
TPEFYP048MA1M0A	48000/54000	14.1/15.8
TPEFYP054MA1M0A	54000/60000	15.8/17.6

[1] Components and Functions

1. Indoor (Main) Unit

(1) In case of rear inlet

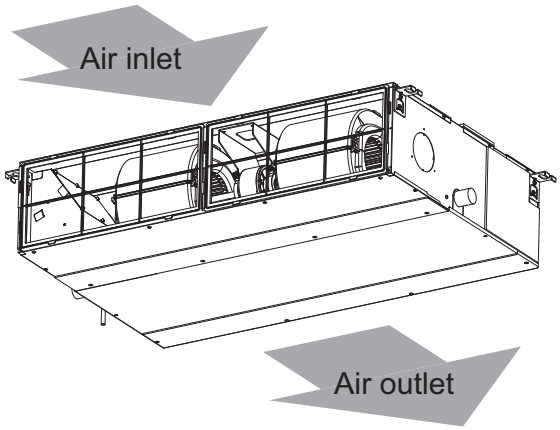

(2) In case of bottom inlet

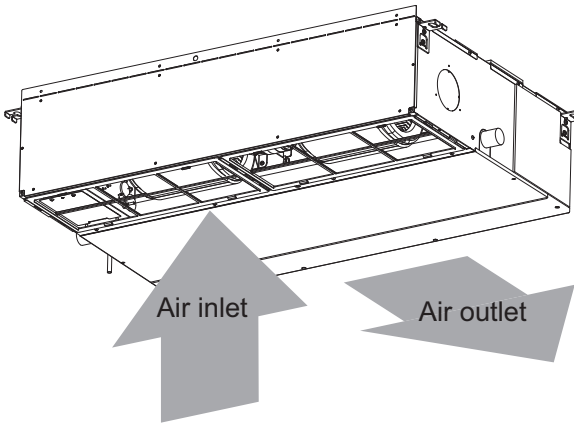

2. Remote Controller
[TAR-43MAAUB]
Once the operation mode is selected, the unit will remain in the selected mode until changed.

(1) Remote Controller Interface

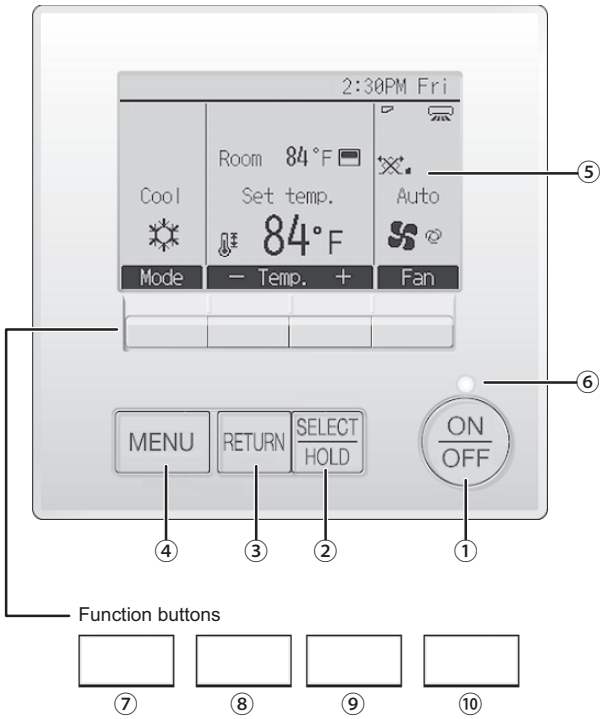

① [ON/OFF] button

Press to turn ON/OFF the indoor unit.

② [SELECT/HOLD] button

Press to save the setting.
When the Main menu is displayed, pressing this button will enable/disable the HOLD function.

③ [RETURN] button

Press to return to the previous screen.

④ [MENU] button

Press to bring up the Main menu.

⑤ Backlit LCD

Operation settings will appear.
When the backlight is off, pressing any button turns the backlight on and it will stay lit for a certain period of time depending on the screen.

When the backlight is off, pressing any button turns the backlight on and does not perform its function. (except for the [ON/OFF] button)

⑥ ON/OFF lamp

This lamp lights up in green while the unit is in operation. It blinks while the remote controller is starting up or when there is an error.

The functions of the function buttons change depending on the screen. Refer to the button function guide that appears at the bottom of the LCD for the functions they serve on a given screen.
When the system is centrally controlled, the button function guide that corresponds to the locked button will not appear.

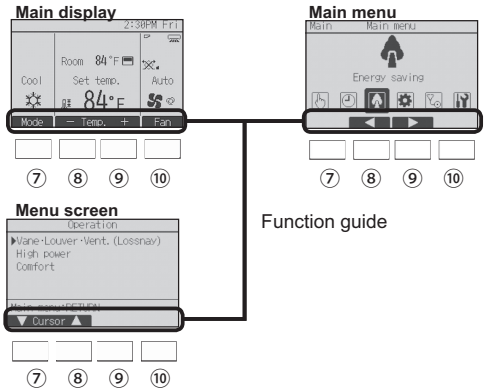

⑦ Function button [F1]

Main display: Press to change the operation mode.
Menu screen: The button function varies with the screen.

⑧ Function button [F2]

Main display: Press to decrease temperature.
Main menu: Press to move the cursor left.
Menu screen: The button function varies with the screen.

⑨ Function button [F3]

Main display: Press to increase temperature.
Main menu: Press to move the cursor right.
Menu screen: The button function varies with the screen.

⑩ Function button [F4]

Main display: Press to change the fan speed.
Menu screen: The button function varies with the screen.

(2) Remote Controller Display

The main display can be displayed in two different modes: “Full” and “Basic.” The factory setting is “Full.” To switch to the “Basic” mode, change the setting on the Main display setting.

Full mode

* All icons are displayed for explanation.

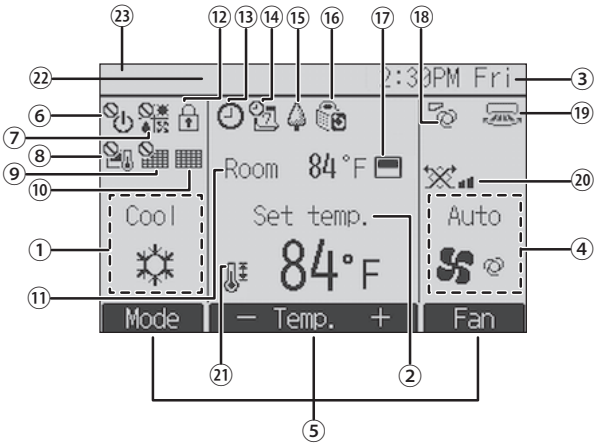

Basic mode

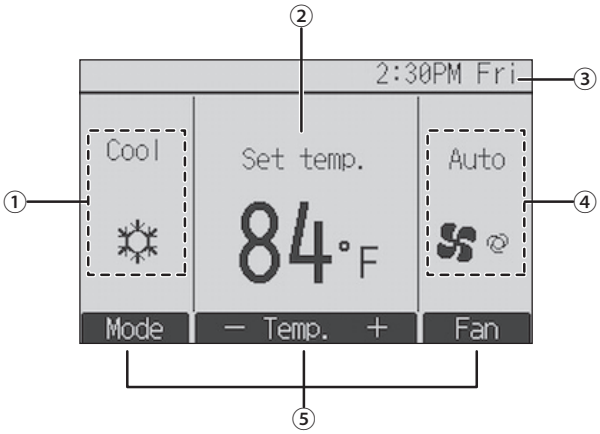

① Operation mode

Indoor unit operation mode appears here.

② Set temperature

Set temperature appears here.

③ Clock

Current time appears here.

④ Fan speed

Fan speed setting appears here.

⑤ Button function guide

Functions of the corresponding buttons appear here.

⑥

Appears when the ON/OFF operation is centrally controlled.

⑦

Appears when the operation mode is centrally controlled.

⑧

Appears when the set temperature is centrally controlled.

⑨

Appears when the filter reset function is centrally controlled.

⑩

Indicates when filter needs maintenance.

⑪ Room temperature

Current room temperature appears here.

⑫

Appears when the buttons are locked.

⑬

Appears when the On/Off timer or Auto-off timer function is enabled.

appears when the timer is disabled by the centralized control system.

appears when the HOLD function is enabled.

⑭

Appears when the Weekly timer is enabled.

⑮

Appears while the units are operated in the energy-save mode. (Will not appear on some models of indoor units)

⑯

Appears while the outdoor units are operated in the silent mode.

⑰

Appears when the built-in thermistor on the remote controller is activated to monitor the room temperature (⑪).

appears when the thermistor on the indoor unit is activated to monitor the room temperature.

⑱

Indicates the vane setting.

⑲

Indicates the louver setting.

⑳

Indicates the ventilation setting.

㉑

Appears when the set temperature range is restricted.

㉒ Centrally controlled

Appears for a certain period of time when a centrally-controlled item is operated.

㉓ Error display

An error code appears during the error.

* When an error code is displayed on the main display, an error is occurring but the indoor unit can keep its operation. If an error occurs, note the error code and consult your dealer.

Most settings (except ON/OFF, mode, fan speed, temperature) can be made from the Main menu.

[1] Specifications

1. Specifications

Model			TPEFYP006MA1M0A	TPEFYP008MA1M0A	TPEFYP012MA1M0A	TPEFYP015MA1M0A
Power source			1-phase 208/230 V 60 Hz	1-phase 208/230 V 60 Hz	1-phase 208/230 V 60 Hz	1-phase 208/230 V 60 Hz
Cooling capacity	*1	BTU/h	6,000	8,000	12,000	15,000
	*1	kW	1.8	2.3	3.5	4.4
	*2 Power input	kW	0.042	0.042	0.052	0.062
	*2 Current input	A	0.42/0.38	0.42/0.38	0.56/0.51	0.64/0.58
Heating capacity	*3	BTU/h	6,700	9,000	13,500	17,000
	*3	kW	2.0	2.6	4.0	5.0
	*2 Power input	kW	0.040	0.040	0.050	0.060
	*2 Current input	A	0.42/0.38	0.42/0.38	0.56/0.51	0.64/0.58
External finish			Galvanized steel plate	Galvanized steel plate	Galvanized steel plate	Galvanized steel plate
External dimension H x W x D		inch	9-7/8 x 27-9/16 x 28-7/8	9-7/8 x 27-9/16 x 28-7/8	9-7/8 x 27-9/16 x 28-7/8	9-7/8 x 35-7/16 x 28-7/8
		mm	250 x 700 x 732	250 x 700 x 732	250 x 700 x 732	250 x 900 x 732
Net weight		lbs (kg)	48 (21.5)	48 (21.5)	48 (21.5)	58 (26)
Heat exchanger			Cross fin (Aluminum fin and copper tube)	Cross fin (Aluminum fin and copper tube)	Cross fin (Aluminum fin and copper tube)	Cross fin (Aluminum fin and copper tube)
FAN	Type x Quantity		Sirocco fan x 1	Sirocco fan x 1	Sirocco fan x 1	Sirocco fan x 2
	*4 External static press.	in.WG	<0.14> - 0.20 - <0.28> - <0.40> - <0.60>	<0.14> - 0.20 - <0.28> - <0.40> - <0.60>	<0.14> - 0.20 - <0.28> - <0.40> - <0.60>	<0.14> - 0.20 - <0.28> - <0.40> - <0.60>
		Pa	<35> - 50 - <70> - <100> - <150>	<35> - 50 - <70> - <100> - <150>	<35> - 50 - <70> - <100> - <150>	<35> - 50 - <70> - <100> - <150>
	Motor Type		DC motor	DC motor	DC motor	DC motor
	Motor output	kW	0.085	0.085	0.085	0.121
	Driving mechanism		Direct-driven by motor	Direct-driven by motor	Direct-driven by motor	Direct-driven by motor
	Air flow rate		(Low-Mid-High)	(Low-Mid-High)	(Low-Mid-High)	(Low-Mid-High)
		cfm	212 - 265 - 300	212 - 265 - 300	265 - 318 - 371	353 - 424 - 494
		m^3/min	6.0 - 7.5 - 8.5	6.0 - 7.5 - 8.5	7.5 - 9.0 - 10.5	10.0 - 12.0 - 14.0
		L/s	100 - 125 - 142	100 - 125 - 142	125 - 150 - 175	167 - 200 - 233
Sound pressure level (measured in anechoic room)			(Low-Mid-High)	(Low-Mid-High)	(Low-Mid-High)	(Low-Mid-High)
	*2	dB <A>	24-28-30	24-28-30	26-30-34	27-31-34
Insulation material			EPS, Polyethylene foam, Urethane foam	EPS, Polyethylene foam, Urethane foam	EPS, Polyethylene foam, Urethane foam	EPS, Polyethylene foam, Urethane foam
Air filter			PP honeycomb fabric.	PP honeycomb fabric.	PP honeycomb fabric.	PP honeycomb fabric.
Protection device			Fuse	Fuse	Fuse	Fuse
Refrigerant control device			LEV	LEV	LEV	LEV
Connectable outdoor unit			R32/R454B CITY MULTI	R32/R454B CITY MULTI	R32/R454B CITY MULTI	R32/R454B CITY MULTI
Diameter of refrigerant pipe	Liquid	inch (mm)	1/4 (6.35)Brazed	1/4 (6.35)Brazed	1/4 (6.35)Brazed	1/4 (6.35)Brazed
	Gas	inch (mm)	1/2 (12.7)Brazed	1/2 (12.7)Brazed	1/2 (12.7)Brazed	1/2 (12.7)Brazed
Field drain pipe size		inch (mm)	O.D.1-1/4 (32)	O.D.1-1/4 (32)	O.D.1-1/4 (32)	O.D.1-1/4 (32)
Drawing	External		KB94C9Z5	KB94C9Z5	KB94C9Z5	KB94C9Z5
	Wiring		KB94C9Z4	KB94C9Z4	KB94C9Z4	KB94C9Z4
	Refrigerant cycle		-	-	-	-
Standard attachment	Document		Installation Manual, Instruction Book	Installation Manual, Instruction Book	Installation Manual, Instruction Book	Installation Manual, Instruction Book
	Accessory		Washer, Drain socket, Tie band	Washer, Drain socket, Tie band	Washer, Drain socket, Tie band	Washer, Drain socket, Tie band
Optional parts	External heater adapter		PAC-YU25HT	PAC-YU25HT	PAC-YU25HT	PAC-YU25HT
	Filter box		PAC-KE91TB-E	PAC-KE91TB-E	PAC-KE91TB-E	PAC-KE92TB-E
Remarks			* Details on foundation work, duct work, insulation work, electrical wiring, power source switch, and other items shall be referred to the Installation Manual. * Due to continuing improvement, above specifications may be subject to change without notice.			

Notes:

1. Nominal cooling conditions
   Indoor: 80°FD.B./67°FW.B. (26.7°CD.B./19.4°CW.B.), Outdoor: 95°FD.B. (35°CD.B.)
   Pipe length: 25 ft. (7.6 m), Level difference: 0 ft. (0 m)
2. The values are measured at the factory setting of external static pressure.
3. Nominal heating conditions
   Indoor: 70°FD.B. (21.1°CD.B.), Outdoor: 47°FD.B./43°FW.B. (8.3°CD.B./6.1°CW.B.)
   Pipe length: 25 ft. (7.6 m), Level difference: 0 ft. (0 m)
4. The factory setting of external static pressure is shown without < >.
   Refer to "Fan characteristics curves", according to the external static pressure, in DATA BOOK for the usable range of air flow rate.
5. Auxiliary devices which may be a potential ignition source shall not be installed in the duct work.
   Examples of such potential ignition sources are hot surfaces with a temperature exceeding 700°C [1292°F] and electric switching devices.

Unit converter	
BTU/h	=kW x 3,412
cfm	=m^3/min x 35.31
lbs	=kg/0.4536

*Above specification data is subject to rounding variation.

Model			TPEFYP018MA1M0A	TPEFYP024MA1M0A	TPEFYP027MA1M0A	TPEFYP030MA1M0A
Power source			1-phase 208/230 V 60 Hz	1-phase 208/230 V 60 Hz	1-phase 208/230 V 60 Hz	1-phase 208/230 V 60 Hz
Cooling capacity	*1	BTU/h	18,000	24,000	27,000	30,000
	*1	kW	5.3	7.0	7.9	8.8
	*2 Power input	kW	0.142	0.142	0.142	0.222
	*2 Current input	A	1.24/1.12	1.24/1.12	1.24/1.12	2.01/1.82
Heating capacity	*3	BTU/h	20,000	27,000	30,000	34,000
	*3	kW	5.9	7.9	8.8	10.0
	*2 Power input	kW	0.140	0.140	0.140	0.220
	*2 Current input	A	1.24/1.12	1.24/1.12	1.24/1.12	2.01/1.82
External finish			Galvanized steel plate	Galvanized steel plate	Galvanized steel plate	Galvanized steel plate
External dimension H x W x D		inch	9-7/8 x 43-5/16 x 28-7/8	9-7/8 x 43-5/16 x 28-7/8	9-7/8 x 43-5/16 x 28-7/8	9-7/8 x 55-1/8 x 28-7/8
		mm	250 x 1,100 x 732	250 x 1,100 x 732	250 x 1,100 x 732	250 x 1,400 x 732
Net weight		lbs (kg)	67 (30)	67 (30)	67 (30)	84 (38)
Heat exchanger			Cross fin (Aluminum fin and copper tube)	Cross fin (Aluminum fin and copper tube)	Cross fin (Aluminum fin and copper tube)	Cross fin (Aluminum fin and copper tube)
FAN	Type x Quantity		Sirocco fan x 2	Sirocco fan x 2	Sirocco fan x 2	Sirocco fan x 3
	*4 External static press.	in.WG	<0.14> - 0.20 - <0.28> - <0.40> - <0.60>	<0.14> - 0.20 - <0.28> - <0.40> - <0.60>	<0.14> - 0.20 - <0.28> - <0.40> - <0.60>	<0.14> - 0.20 - <0.28> - <0.40> - <0.60>
		Pa	<35> - 50 - <70> - <100> - <150>	<35> - 50 - <70> - <100> - <150>	<35> - 50 - <70> - <100> - <150>	<35> - 50 - <70> - <100> - <150>
	Motor Type		DC motor	DC motor	DC motor	DC motor
	Motor output	kW	0.121	0.121	0.121	0.3
	Driving mechanism		Direct-driven by motor	Direct-driven by motor	Direct-driven by motor	Direct-driven by motor
	Air flow rate		(Low-Mid-High)	(Low-Mid-High)	(Low-Mid-High)	(Low-Mid-High)
		cfm	618 - 742 - 883	618 - 742 - 883	618 - 742 - 883	883 - 1,077 - 1,271
		m^3/min	17.5 - 21.0 - 25.0	17.5 - 21.0 - 25.0	17.5 - 21.0 - 25.0	25.0 - 30.5 - 36.0
		L/s	292 - 350 - 417	292 - 350 - 417	292 - 350 - 417	417 - 508 - 600
Sound pressure level (measured in anechoic room)			(Low-Mid-High)	(Low-Mid-High)	(Low-Mid-High)	(Low-Mid-High)
	*2	dB <A>	31-35-39	31-35-39	31-35-39	35-39-43
Insulation material			EPS, Polyethylene foam, Urethane foam	EPS, Polyethylene foam, Urethane foam	EPS, Polyethylene foam, Urethane foam	EPS, Polyethylene foam, Urethane foam
Air filter			PP honeycomb fabric.	PP honeycomb fabric.	PP honeycomb fabric.	PP honeycomb fabric.
Protection device			Fuse	Fuse	Fuse	Fuse
Refrigerant control device			LEV	LEV	LEV	LEV
Connectable outdoor unit			R32/R454B CITY MULTI	R32/R454B CITY MULTI	R32/R454B CITY MULTI	R32/R454B CITY MULTI
Diameter of refrigerant pipe	Liquid	inch (mm)	1/4 (6.35)Brazed	3/8 (9.52)Brazed	3/8 (9.52)Brazed	3/8 (9.52)Brazed
	Gas	inch (mm)	1/2 (12.7)Brazed	5/8 (15.88)Brazed	5/8 (15.88)Brazed	5/8 (15.88)Brazed
Field drain pipe size		inch (mm)	O.D.1-1/4 (32)	O.D.1-1/4 (32)	O.D.1-1/4 (32)	O.D.1-1/4 (32)
Drawing	External		KB94C9Z5	KB94C9Z5	KB94C9Z5	KB94C9Z5
	Wiring		KB94C9Z4	KB94C9Z4	KB94C9Z4	KB94C9Z4
	Refrigerant cycle		-	-	-	-
Standard attachment	Document		Installation Manual, Instruction Book	Installation Manual, Instruction Book	Installation Manual, Instruction Book	Installation Manual, Instruction Book
	Accessory		Washer, Drain socket, Tie band	Washer, Drain socket, Tie band	Washer, Drain socket, Tie band	Washer, Drain socket, Tie band
Optional parts	External heater adapter		PAC-YU25HT	PAC-YU25HT	PAC-YU25HT	PAC-YU25HT
	Filter box		PAC-KE93TB-E	PAC-KE93TB-E	PAC-KE93TB-E	PAC-KE94TB-E
Remarks			* Details on foundation work, duct work, insulation work, electrical wiring, power source switch, and other items shall be referred to the Installation Manual. * Due to continuing improvement, above specifications may be subject to change without notice.			

Notes:

1. Nominal cooling conditions
   Indoor: 80°FD.B./67°FW.B. (26.7°CD.B./19.4°CW.B.), Outdoor: 95°FD.B. (35°CD.B.)
   Pipe length: 25 ft. (7.6 m), Level difference: 0 ft. (0 m)
2. The values are measured at the factory setting of external static pressure.
3. Nominal heating conditions
   Indoor: 70°FD.B. (21.1°CD.B.), Outdoor: 47°FD.B./43°FW.B. (8.3°CD.B./6.1°CW.B.)
   Pipe length: 25 ft. (7.6 m), Level difference: 0 ft. (0 m)
4. The factory setting of external static pressure is shown without < >.
   Refer to "Fan characteristics curves", according to the external static pressure, in DATA BOOK for the usable range of air flow rate.
5. Auxiliary devices which may be a potential ignition source shall not be installed in the duct work.
   Examples of such potential ignition sources are hot surfaces with a temperature exceeding 700°C [1292°F] and electric switching devices.

Unit converter	
BTU/h	=kW x 3,412
cfm	=m^3/min x 35.31
lbs	=kg/0.4536

*Above specification data is subject to rounding variation.

Model			TPEFYP036MA1M0A	TPEFYP048MA1M0A	TPEFYP054MA1M0A	
Power source			1-phase 208/230 V 60 Hz	1-phase 208/230 V 60 Hz	1-phase 208/230 V 60 Hz	
Cooling capacity	*1	BTU/h	36,000	48,000	54,000	
	*1	kW	10.6	14.1	15.8	
	*2 Power input	kW	0.222	0.242	0.252	
	*2 Current input	A	2.01/1.82	2.06/1.87	2.29/2.07	
Heating capacity	*3	BTU/h	40,000	54,000	60,000	
	*3	kW	11.7	15.8	17.6	
	*2 Power input	kW	0.220	0.240	0.250	
	*2 Current input	A	2.01/1.82	2.06/1.87	2.29/2.07	
External finish			Galvanized steel plate	Galvanized steel plate	Galvanized steel plate	
External dimension H x W x D		inch	9-7/8 x 55-1/8 x 28-7/8	9-7/8 x 55-1/8 x 28-7/8	9-7/8 x 63 x 28-7/8	
		mm	250 x 1,400 x 732	250 x 1,400 x 732	250 x 1,600 x 732	
Net weight		lbs (kg)	84 (38)	86 (39)	93 (42)	
Heat exchanger			Cross fin (Aluminum fin and copper tube)	Cross fin (Aluminum fin and copper tube)	Cross fin (Aluminum fin and copper tube)	
FAN	Type x Quantity		Sirocco fan x 3	Sirocco fan x 3	Sirocco fan x 3	
	*4 External static press.	in.WG	<0.14> - 0.20 - <0.28> - <0.40> - <0.60>	<0.14> - 0.20 - <0.28> - <0.40> - <0.60>	<0.14> - 0.20 - <0.28> - <0.40> - <0.60>	
		Pa	<35> - 50 - <70> - <100> - <150>	<35> - 50 - <70> - <100> - <150>	<35> - 50 - <70> - <100> - <150>	
	Motor Type		DC motor	DC motor	DC motor	
	Motor output	kW	0.3	0.3	0.3	
	Driving mechanism		Direct-driven by motor	Direct-driven by motor	Direct-driven by motor	
	Air flow rate		(Low-Mid-High)	(Low-Mid-High)	(Low-Mid-High)	
		cfm	883 - 1,077 - 1,271	918 - 1,112 - 1,306	989 - 1,201 - 1,413	
		m^3/min	25.0 - 30.5 - 36.0	26.0 - 31.5 - 37.0	28.0 - 34.0 - 40.0	
		L/s	417 - 508 - 600	433 - 525 - 617	467 - 567 - 667	
Sound pressure level (measured in anechoic room)			(Low-Mid-High)	(Low-Mid-High)	(Low-Mid-High)	
	*2	dB <A>	35-39-43	35-40-44	34-38-42	
Insulation material			EPS, Polyethylene foam, Urethane foam	EPS, Polyethylene foam, Urethane foam	EPS, Polyethylene foam, Urethane foam	
Air filter			PP honeycomb fabric.	PP honeycomb fabric.	PP honeycomb fabric.	
Protection device			Fuse	Fuse	Fuse	
Refrigerant control device			LEV	LEV	LEV	
Connectable outdoor unit			R32/R454B CITY MULTI	R32/R454B CITY MULTI	R32/R454B CITY MULTI	
Diameter of refrigerant pipe	Liquid	inch (mm)	3/8 (9.52)Brazed	3/8 (9.52)Brazed	3/8 (9.52)Brazed	
	Gas	inch (mm)	5/8 (15.88)Brazed	5/8 (15.88)Brazed	5/8 (15.88)Brazed	
Field drain pipe size		inch (mm)	O.D.1-1/4 (32)	O.D.1-1/4 (32)	O.D.1-1/4 (32)	
Drawing	External		KB94C9Z5	KB94C9Z5	KB94C9Z5	
	Wiring		KB94C9Z4	KB94C9Z4	KB94C9Z4	
	Refrigerant cycle		-	-	-	
Standard attachment	Document		Installation Manual, Instruction Book	Installation Manual, Instruction Book	Installation Manual, Instruction Book	
	Accessory		Washer, Drain socket, Tie band	Washer, Drain socket, Tie band	Washer, Drain socket, Tie band	
Optional parts	External heater adapter		PAC-YU25HT	PAC-YU25HT	PAC-YU25HT	
	Filter box		PAC-KE94TB-E	PAC-KE94TB-E	PAC-KE95TB-E	
Remarks			* Details on foundation work, duct work, insulation work, electrical wiring, power source switch, and other items shall be referred to the Installation Manual. * Due to continuing improvement, above specifications may be subject to change without notice.			

Notes:

1. Nominal cooling conditions
   Indoor: 80°FD.B./67°FW.B. (26.7°CD.B./19.4°CW.B.), Outdoor: 95°FD.B. (35°CD.B.)
   Pipe length: 25 ft. (7.6 m), Level difference: 0 ft. (0 m)
2. The values are measured at the factory setting of external static pressure.
3. Nominal heating conditions
   Indoor: 70°FD.B. (21.1°CD.B.), Outdoor: 47°FD.B./43°FW.B. (8.3°CD.B./6.1°CW.B.)
   Pipe length: 25 ft. (7.6 m), Level difference: 0 ft. (0 m)
4. The factory setting of external static pressure is shown without < >.
   Refer to "Fan characteristics curves", according to the external static pressure, in DATA BOOK for the usable range of air flow rate.
5. Auxiliary devices which may be a potential ignition source shall not be installed in the duct work.
   Examples of such potential ignition sources are hot surfaces with a temperature exceeding 700°C [1292°F] and electric switching devices.

Unit converter	
BTU/h	=kW x 3,412
cfm	=m^3/min x 35.31
lbs	=kg/0.4536

*Above specification data is subject to rounding variation.

2. Electrical component specifications

Component	Sym-bol	TPEFYP006MA1M0A	TPEFYP008MA1M0A	TPEFYP012MA1M0A
Room temperature thermistor	TH21	Resistance 0°C/15kΩ, 10°C/9.6kΩ, 20°C/6.3kΩ, 25°C/5.4kΩ, 30°C/4.3kΩ, 40°C/3.0kΩ		
Liquid pipe thermistor	TH22	Resistance 0°C/15kΩ, 10°C/9.6kΩ, 20°C/6.3kΩ, 25°C/5.4kΩ, 30°C/4.3kΩ, 40°C/3.0kΩ		
Gas pipe thermistor	TH23	Resistance 0°C/15kΩ, 10°C/9.6kΩ, 20°C/6.3kΩ, 25°C/5.4kΩ, 30°C/4.3kΩ, 40°C/3.0kΩ		
Fuse	F1	250 VAC 6.3A		
	F2	400 VDC 3A		
Fan motor	MF	8-pole, Output 85W ZWB278D51A		
Linear expansion valve	LEV	12 VDC Stepping motor (0~2000 pulse)		
Power supply terminal block	TB2	(L1, L2) 250V 20A		
Transmission terminal block	TB5 TB15	(1, 2) 250V 15A, (M1, M2, S) 250V 20A		
Drain float switch	FS	Open/short detection Initial contact resistance 500 mΩ or less		
Drain pump	DP	PMD INPUT 3.9W (13 VDC) 36L/h		
R32/R454B sensor	CNSA	5 VDC		

Component	Sym-bol	TPEFYP015 MA1M0A	TPEFYP018 MA1M0A	TPEFYP024 MA1M0A	TPEFYP027 MA1M0A	TPEFYP030 MA1M0A
Room temperature thermistor	TH21	Resistance 0°C/15kΩ, 10°C/9.6kΩ, 20°C/6.3kΩ, 25°C/5.4kΩ, 30°C/4.3kΩ, 40°C/3.0kΩ				
Liquid pipe thermistor	TH22	Resistance 0°C/15kΩ, 10°C/9.6kΩ, 20°C/6.3kΩ, 25°C/5.4kΩ, 30°C/4.3kΩ, 40°C/3.0kΩ				
Gas pipe thermistor	TH23	Resistance 0°C/15kΩ, 10°C/9.6kΩ, 20°C/6.3kΩ, 25°C/5.4kΩ, 30°C/4.3kΩ, 40°C/3.0kΩ				
Fuse	F1	250 VAC 6.3A				
	F2	400 VDC 3A				
Fan motor	MF	8-pole, Output 121W ZWB278D54A				
Linear expansion valve	LEV	12 VDC Stepping motor (0~2000 pulse)				
Power supply terminal block	TB2	(L1, L2) 250V 20A				
Transmission terminal block	TB5 TB15	(1, 2) 250V 15A, (M1, M2, S) 250V 20A				
Drain float switch	FS	Open/short detection Initial contact resistance 500 mΩ or less				
Drain pump	DP	PMD INPUT 3.9W (13 VDC) 36L/h				
R32/R454B sensor	CNSA	5 VDC				

Component	Sym-bol	TPEFYP036MA1M0A	TPEFYP048MA1M0A	TPEFYP054MA1M0A
Room temperature thermistor	TH21	Resistance 0°C/15kΩ, 10°C/9.6kΩ, 20°C/6.3kΩ, 25°C/5.4kΩ, 30°C/4.3kΩ, 40°C/3.0kΩ		
Liquid pipe thermistor	TH22	Resistance 0°C/15kΩ, 10°C/9.6kΩ, 20°C/6.3kΩ, 25°C/5.4kΩ, 30°C/4.3kΩ, 40°C/3.0kΩ		
Gas pipe thermistor	TH23	Resistance 0°C/15kΩ, 10°C/9.6kΩ, 20°C/6.3kΩ, 25°C/5.4kΩ, 30°C/4.3kΩ, 40°C/3.0kΩ		
Fuse	F1	250 VAC 6.3A		
	F2	400 VDC 3A		
Fan motor	MF	10-pole, Output 300W ZWB3710D01A		
Linear expansion valve	LEV	12 VDC Stepping motor (0~2000 pulse)		
Power supply terminal block	TB2	(L1, L2) 250V 20A		
Transmission terminal block	TB5 TB15	(1, 2) 250V 15A, (M1, M2, S) 250V 20A		
Drain float switch	FS	Open/short detection Initial contact resistance 500 mΩ or less		
Drain pump	DP	PMD INPUT 3.9W (13 VDC) 36L/h		
R32/R454B sensor	CNSA	5 VDC		

[1] Outlines and Dimensions

1. TPEFYP006, 008, 012, 015, 018, 024, 027, 030, 036, 048, 054MA1M0A

Unit: mm (in.)

Notes
1. Use an M10 screw for the suspension bolt (field supply).
2. Keep the service space for maintenance at the bottom.
3. If the inlet duct is used, remove the air filter (supplied with the unit), then install the filter (field supply) at the suction side.
4. Heat air to 0°C (32°F) or higher when taking fresh air with a fresh air intake.
5. As representative drawing, TPEFYP018 · 024 · 027MA1M0A is shown in this drawing. Refer to below information about the number of fan.

Model	Number of fan
TPEFYP006,008,012MA1M0A	1
TPEFYP015,018,024,027MA1M0A	2
TPEFYP030,036,048,054MA1M0A	3

Model	① Gas pipe	② Liquid pipe
TPEFYP006,008,012, 015,018MA1M0A	ø12.7 (1/2)	ø6.35 (1/4)
TPEFYP024,027,030, 036,048,054MA1M0A	ø15.88 (5/8)	ø9.52 (3/8)

Model	A	B	C	D	E	F	G
TPEFYP006,008,012MA1M0A	700 (27-9/16)	754 (29-11/16)	800 (31-1/2)	660 (26)	7	600 (23-5/8)	658 (25-15/16)
TPEFYP015MA1M0A	900 (35-7/16)	954 (37-9/16)	1000 (39-3/8)	860 (33-7/8)	9	800 (31-1/2)	858 (33-13/16)
TPEFYP018,024,027MA1M0A	1100 (43-5/16)	1154 (45-7/16)	1200 (47-1/4)	1060 (41-3/4)	11	1000 (39-3/8)	1058 (41-11/16)
TPEFYP030,036,048MA1M0A	1400 (55-1/8)	1454 (57-1/4)	1500 (59-1/16)	1360 (53-9/16)	14	1300 (51-3/16)	1358 (53-1/2)
TPEFYP054MA1M0A	1600 (63)	1654 (65-1/8)	1700 (66-15/16)	1560 (61-7/16)	16	1500 (59-1/16)	1558 (61-3/8)

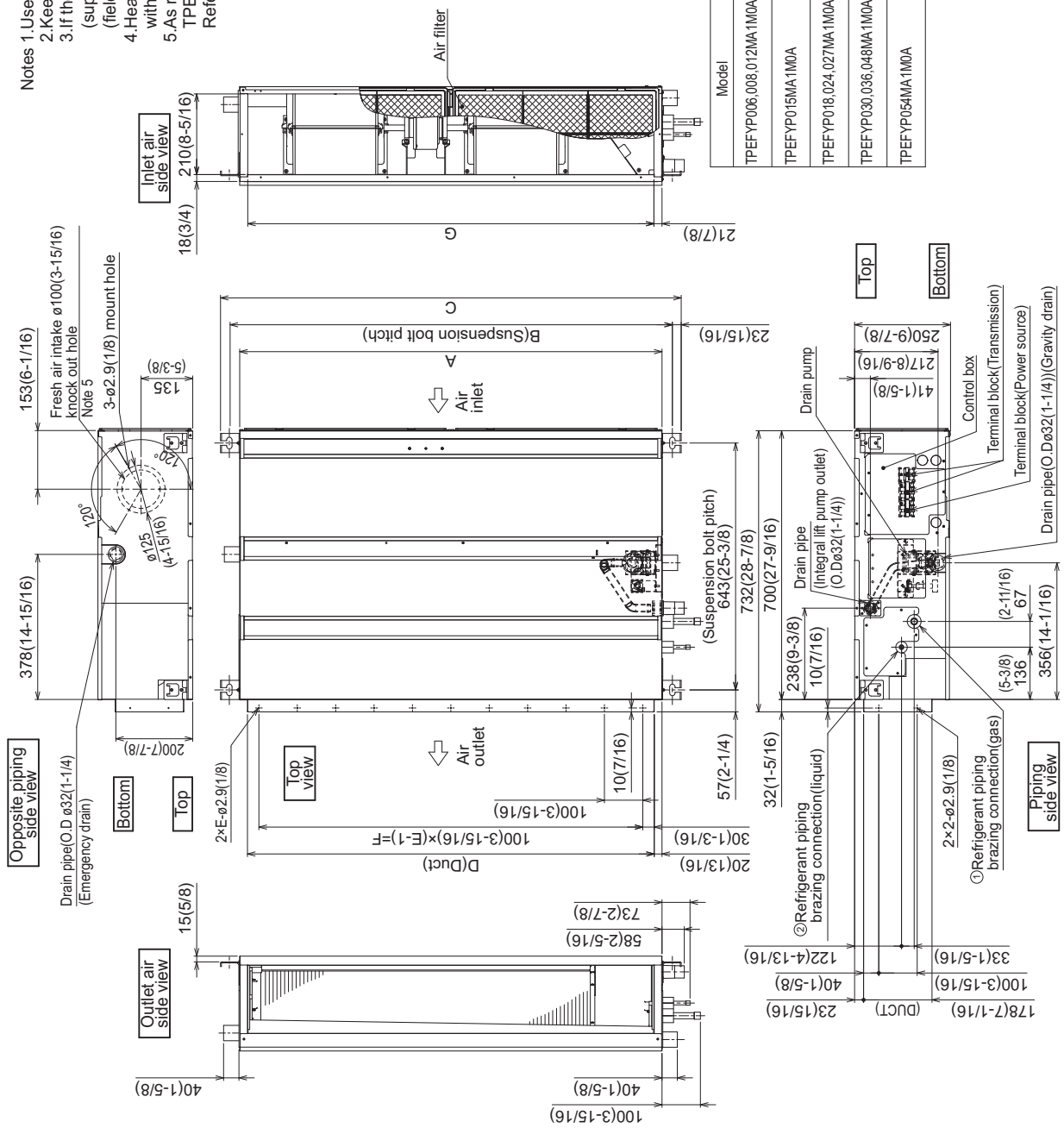

[Maintenance access space]

Secure enough access space to allow for the maintenance, inspection, and replacement of the motor, fan, drain pump, heat exchanger, and control box in one of the following ways.
Select an installation site for the indoor unit so that it's maintenance access space will not be obstructed by beams or other objects.

(1) When a space of 300mm or more is available below the unit between the unit and the ceiling. (Fig.1)
· Create access door 1 and 2 (450×450mm each) as shown in Fig.2.
(Access door 2 is not required if enough space is available below the unit for a maintenance worker to work in.)

(2) When a space of less than 300mm is available below the unit between the unit and the ceiling.
(At least 20mm of space should be left below the unit as shown in Fig.3.)
· Create access door 1 diagonally below the control box and access door 3 below the unit as shown in Fig.4.
or
· Create access door 4 below the control box and the unit as shown in Fig.5.

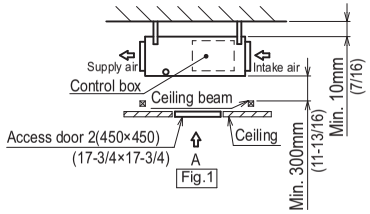

Fig.1

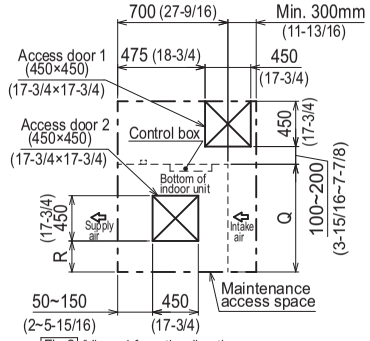

Fig.2 (Viewed from the direction of the arrow A)

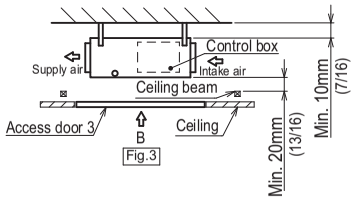

Fig.3

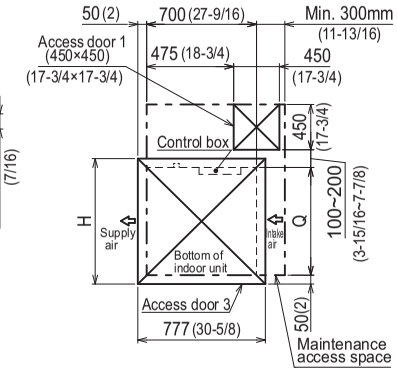

Fig.4 (Viewed from the direction of the arrow B)

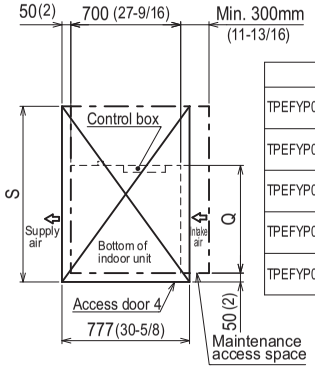

Fig.5 (Viewed from the direction of the arrow B)

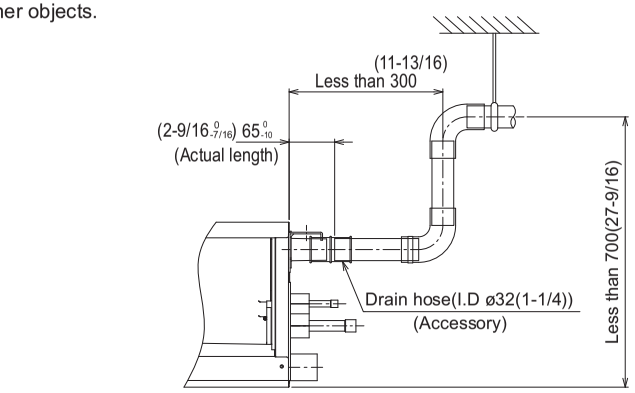

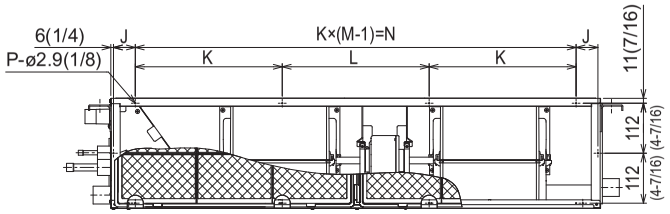

Unit: mm (in.)

Model	H	J	K	L	M	N	P	Q	R	S
TPEFYP006,008,012MA1M0A	800 (31-1/2)	44 (1-3/4)	150 (5-15/16)	300 (11-13/16)			10	700 (27-9/16)	50~150 (2)~(5-15/16)	1300 (51-3/16)
TPEFYP015MA1M0A	1000 (39-3/8)	54 (2-3/16)	260 (10-1/4)		4	780 (30-3/4)	10	900 (35-7/16)	150~250 (5-15/16)~(9-7/8)	1500 (59-1/16)
TPEFYP018,024,027MA1M0A	1200 (47-1/4)	49 (1-15/16)	330 (13)		4	990 (39)	10	1100 (43-5/16)	250~350 (9-7/8)~(13-13/16)	1700 (66-15/16)
TPEFYP030,036,048MA1M0A	1500 (59-1/16)	54 (2-3/16)	320 (12-5/8)		5	1280 (50-7/16)	12	1400 (55-1/8)	400~500 (15-3/4)~(19-11/16)	2000 (78-3/4)
TPEFYP054MA1M0A	1700 (66-15/16)	54 (2-3/16)	370 (14-5/8)		5	1480 (58-5/16)	12	1600 (63)	500~600 (19-11/16)~(23-5/8)	2200 (86-5/8)

[1] Wiring Diagram

1. TPEFYP006, 008, 012, 015, 018, 024, 027, 030, 036, 048, 054MA1M0A

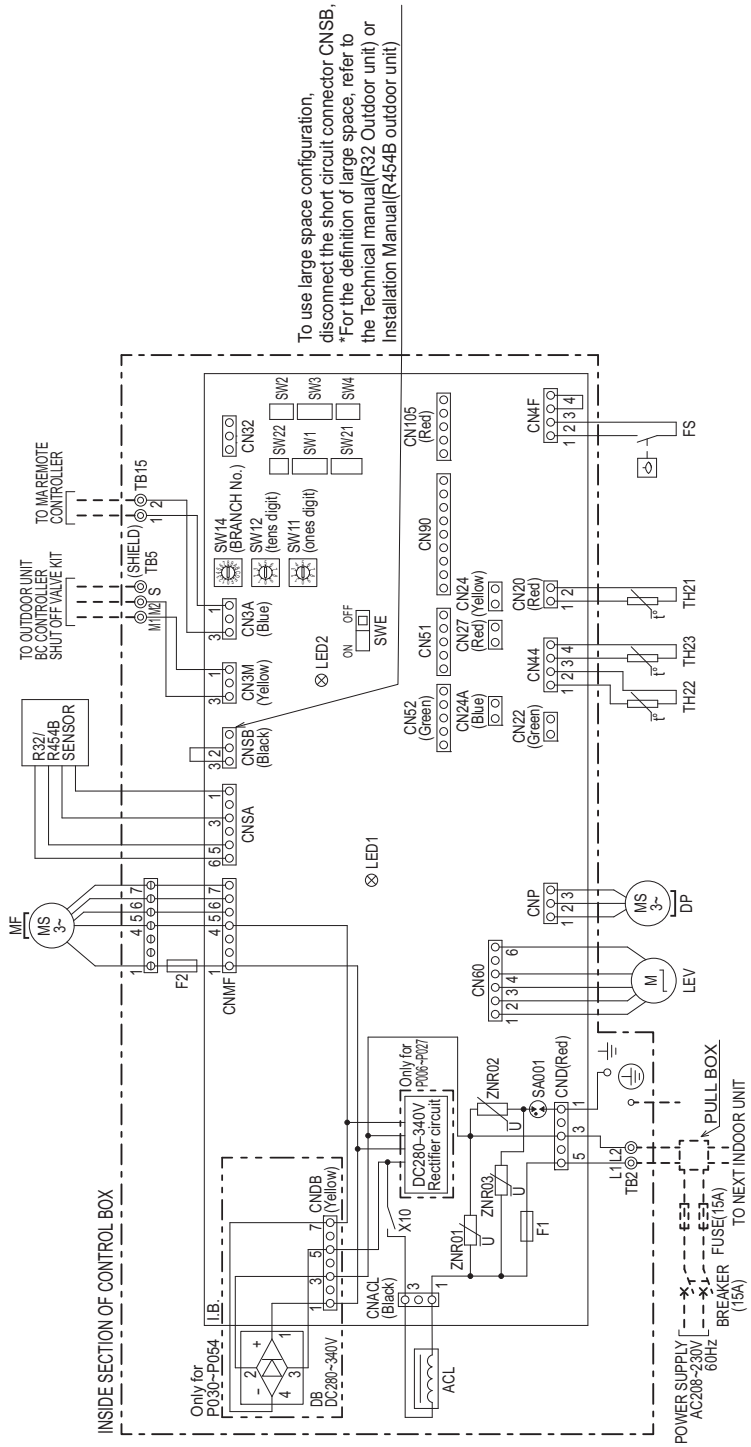

NOTE)1.Symbols used in wiring diagram are
○○○, ⊖⊖⊖:Connector, ◎:Terminal,
- - - - - (Heavy dotted line):Field wiring.
2.Use copper supply wires.
Utilisez des fils d'alimentation en cuivre.
3.A disconnect should be required by local code.
Se procurer un sectionneur
conforme aux réglementations locales.

SYMBOL EXPLANATION

SYMBOL	NAME
I.B.	INDOOR CONTROLLER BOARD
SA001	ARRESTOR
F1	FUSE AC250V 6.3A (TP) M-BL8A04
ZNR01,02,03	VARISTOR
X10	AUX. RELAY
CN22	CONNECTOR (FAN CONTROL)
CN24	CONNECTOR (HEATER CONTROL 1ST)
CN24A	CONNECTOR (HEATER CONTROL 2ND)
CN27	CONNECTOR (DAMPER)
CN32	CONNECTOR (REMOTE SWITCH)
CN51	CONNECTOR (CENTRALLY CONTROL)
CN52	CONNECTOR (REMOTE INDICATION)
CN90	CONNECTOR (WIRELESS)
CN105	CONNECTOR (IT TERMINAL)

SYMBOL	NAME
I.B.	INDOOR CONTROLLER BOARD
SW1	SWITCH (FOR MODE SELECTION)
SW2	SWITCH (FOR CAPACITY CODE)
SW3	SWITCH (FOR MODE SELECTION)
SW4	SWITCH (FOR MODEL SELECTION)
SW11	SWITCH (ADDRESS SETTING FOR ONES DIGIT)
SW12	SWITCH (ADDRESS SETTING FOR TENS DIGIT)
SW14	SWITCH (BRANCH NO.)
SW21	SWITCH (FOR STATIC PRESSURE SELECTION)
SW22	SWITCH (WIRELESS PAIR NO.)
SWE	CONNECTOR (EMERGENCY OPERATION)
LED1	LED (POWER SUPPLY)
LED2	LED (REMOTE CONTROLLER SUPPLY)

SYMBOL	NAME
ACL	AC REACTOR (POWER FACTOR IMPROVEMENT)
DB	DIODE BRIDGE
DP	DRAIN PUMP
F2	FUSE DC400V 3A SHV11
FS	FLOAT SWITCH
MF	FAN MOTOR
LEV	LINEAR EXPANSION VALVE
TB2	POWER SOURCE TERMINAL BLOCK
TB5	TRANSMISSION TERMINAL BLOCK
TB15	TRANSMISSION TERMINAL BLOCK
TH21	THERMISTOR (INLET AIR TEMP. DETECTION)
TH22	THERMISTOR (PIPING TEMP. DETECTION/LIQUID)
TH23	THERMISTOR (PIPING TEMP. DETECTION/GAS)

[1] Refrigerant system diagram

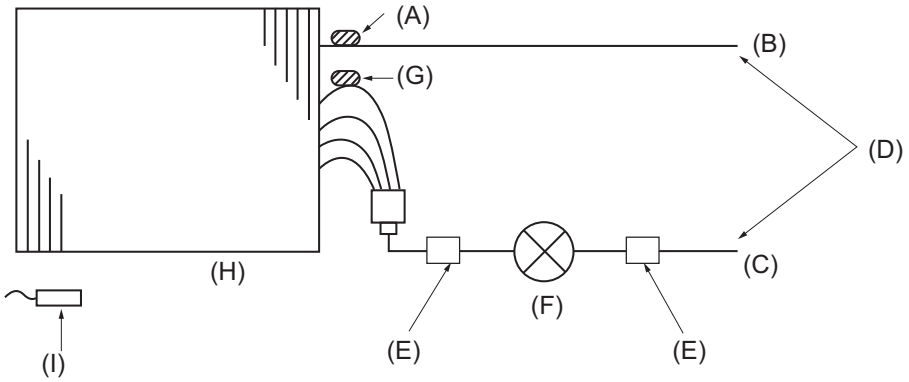

(A) Gas pipe thermistor TH23

(B) Gas pipe

(C) Liquid pipe

(D) Brazed connections

(E) Strainer (#100 mesh)

(F) Linear expansion valve

(G) Liquid pipe thermistor TH22

(H) Heat exchanger

(I) Room temperature thermistor TH21

Capacity	TPEFYP006, 008, 012, 015, 018MA1M0A	TPEFYP024, 027, 030, 036, 048, 054MA1M0A
Gas pipe	ø12.7 [1/2]	ø15.88 [5/8]
Liquid pipe	ø6.35 [1/4]	ø9.52 [3/8]

[1] Microprocessor Control

1. Cool operation

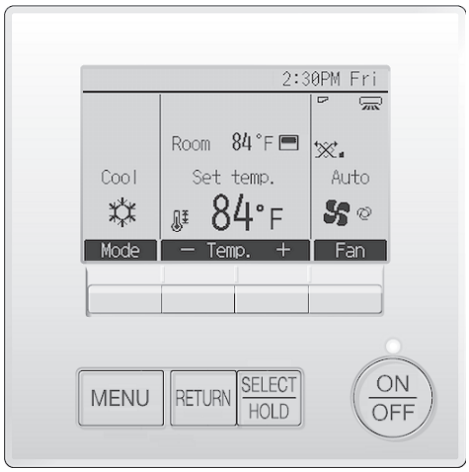

<How to operate>

1. Press POWER [ON/OFF] button.
2. Press the [F1] button to display Cool.
3. Press the [F2] or [F3] button to set the desired temperature.

Note

The set temperature changes 2°F when the [F2] or [F3] button is pressed one time. Cooling 67 to 87°F

1. Thermoregulating function

(1) Thermoregulating function (Function to prevent restarting for 3 minutes)

- Room temperature ≥ desired temperature + 2°F ···Thermo ON
- Room temperature ≤ desired temperature ···Thermo OFF

(2) Anti-freezing control (Frost Prevention control of indoor unit)

- Detected condition:

When BOTH conditions 1 and 2 have been meet, the indoor LEV will close to minimum Thermo OFF* position until released.

1) Indoor unit has been Thermo ON* in Cool/Dry mode for at least 16 min.
2) When the liquid pipe temp (TH22) or gas pipe temp (TH23) is 33.8°F or less, continuously for 3 min.

- Released condition:

Anti-freezing control is cancelled when ANY one of the following conditions is satisfied, and an additional 3 minutes have passed.

1) Liquid pipe temp (TH22) and gas pipe temp (TH23) are 50°F or above continuously for 1 min.
2) The condition of the Thermo OFF* has become complete by thermal-regulating (unit satisfies by set point).
3) The operation mode becomes a mode other than COOL or Dry.
4) The operation is stopped (unit is turned off).
5) Three min have passed from start of anti-freezing control.

*Thermo OFF = The IC coil is not actively cooling or heating.
*Thermo ON = The IC coil is actively cooling or heating.

Example:

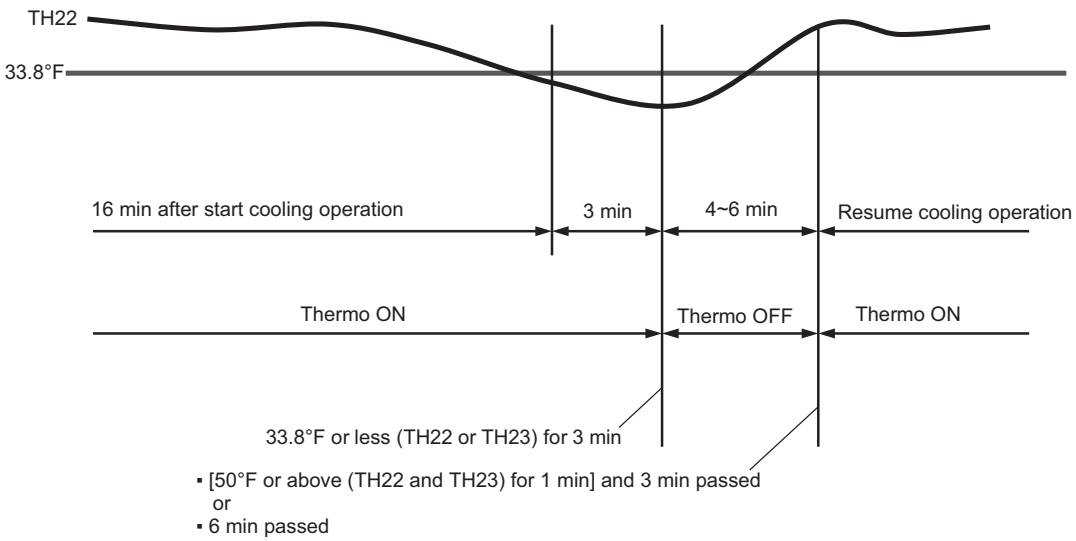

2. Fan

(1) By the remote controller setting (switch of 3 speeds+Auto)

Type	Fan speed notch
3 speeds + Auto type	[Low], [Mid], [High], [Auto]

- When [Auto] is set, fan speed is changed depending on the value of: Room temperature - Desired temperature

3. Drain pump

(1) Drain pump control

- Always drain pump ON during the Cool and Drying mode operation. (Regardless of the thermo ON/ OFF)
- When the operation mode has changed from the Cool or Drying to the others (including Stop), OFF the control after the drain pump ON for 3 minutes.

(2) Float switch control

- Float switch control judges whether the sensor is in the air or in the water by turning the float switch ON/OFF.

In the water : Detected that the float switch is ON for 15 seconds.
In the air : Detected that the float switch is OFF for 15 seconds.

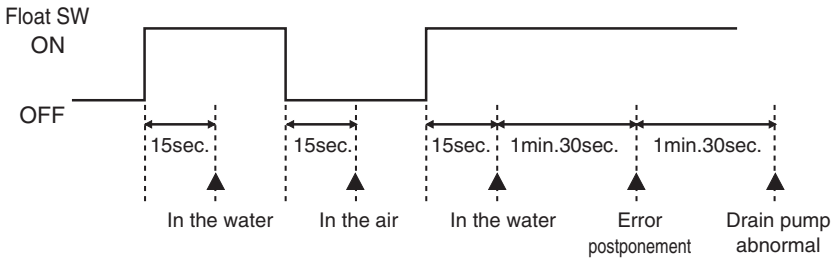

2. Drying operation

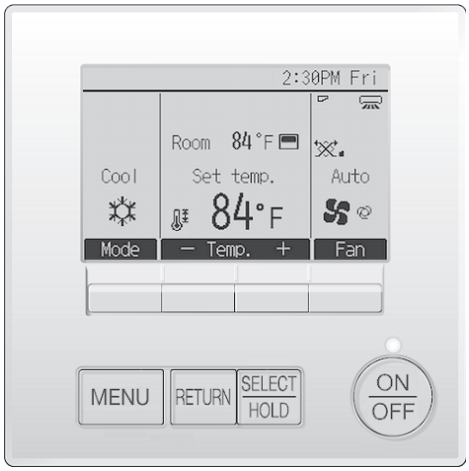

<How to operate>

1. Press POWER [ON/OFF] button.
2. Press the [F1] button to display Drying.
3. Press the [F2] or [F3] button to set the desired temperature.

Note

The set temperature changes 2°F when the [F2] or [F3] button is pressed one time. Drying 67 to 87°F

1. Thermoregulating function

(1) Thermoregulating function (Function to prevent restarting for 3 minutes)

- Setting the Dry thermo by the thermoregulating signal and the room temperature (TH21).

Dry thermo ON Room temperature ≥ desired temperature + 2°F
Dry thermo OFF Room temperature ≤ desired temperature

Room temperature	3 min. passed since starting operation		Dry thermo ON time (min)	Dry thermo OFF time (min)
	Thermoregulating signal	Room temperature (T1)		
Over 64°F	ON	T1 ≥ 83°F	9	3
		83°F > T1 ≥ 79°F	7	3
		79°F > T1 ≥ 75°F	5	3
		75°F > T1	3	3
	OFF	Unconditional	3	10
Less than 64°F	Dry thermo OFF			

(2) Frozen prevention control

- No control function

2. Fan

(1) Indoor fan operation controlled depends on the compressor conditions.

Dry thermo	Fan speed notch	
ON	[Low]	
OFF	Room temp. ≥ 64°F	Stop
	Room temp. < 64°F	[Low]

Note

Remote controller setting is not acceptable.

3. Drain pump

(1) Same control as Cool operation

3. Fan operation

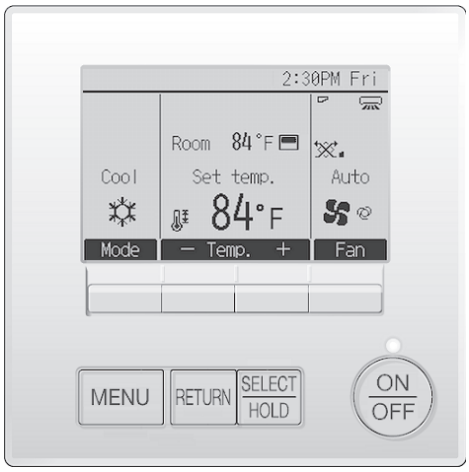

<How to operate>

1. Press POWER [ON/OFF] button.
2. Press the [F4] button to display Fan.

1. Fan

(1) Set by remote controller.

Type	Fan speed notch
3 speeds + Auto type	[Low], [Mid], [High], [Auto]

♦When [Auto] is set, fan speed becomes [Low].

2. Drain pump

(1) Drain pump control

♦The drain pump turns ON for the specified amount of time when any of the following conditions is met:

1) ON for 3 minutes after the operation mode is switched from Cool or Drying to another operation mode (Fan).
2) ON for 6 minutes after the float switch is submerged in the water when the float switch control judges the sensor is in the water.

(2) Float switch control

♦Float switch control judges whether the sensor is in the air or in the water by turning the float switch ON/OFF.
In the water : Detected that the float switch is ON for 15 seconds.
In the air : Detected that the float switch is OFF for 15 seconds.

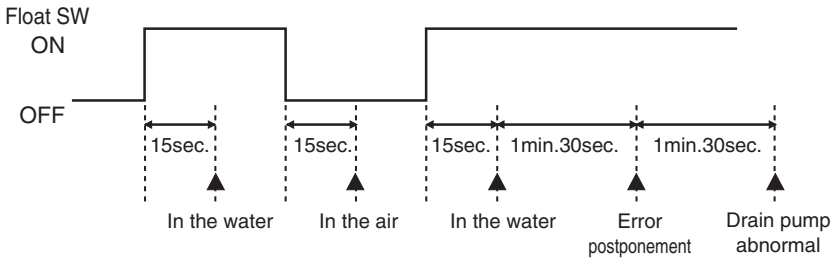

4. Heat operation

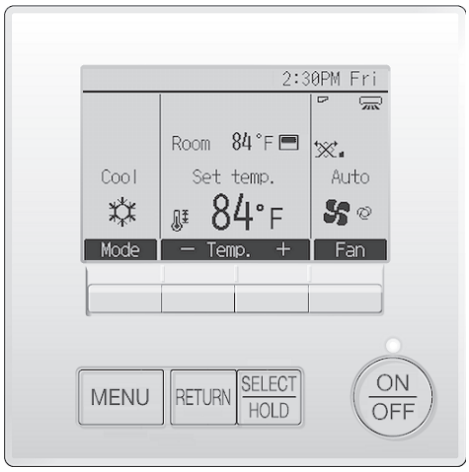

<How to operate>

1. Press POWER [ON/OFF] button.
2. Press the [F1] button to display Heat.
3. Press the [F2] or [F3] button to set the desired temperature.

Note

The set temperature changes 2°F when the [F2] or [F3] button is pressed one time. Heating 63 to 83°F.

<Display in Heat operation>

[DEFROST]
The [DEFROST] symbol is only displayed during the defrost operation.
[STANDBY]
The [STANDBY] symbol is only displayed during the hot adjust mode.

1. Thermoregulating function

(1) Thermoregulating function (Function to prevent restarting for 3 minutes)

- Room temperature ≤ desired temperature -2°F …Thermo ON
- Room temperature ≥ desired temperature …Thermo OFF

2. Fan

(1) By the remote controller setting (switch of 3 speeds+Auto)

Type	Fan speed notch
3 speeds + Auto type	[Low], [Mid], [High], [Auto]

- When [Auto] is set, fan speed is changed depending on the value of:
  Desired temperature - Room temperature
  Give priority to under-mentioned controlled mode

1) Hot adjust mode
2) Preheating exclusion mode
3) Thermo OFF mode (When the compressor off by the thermoregulating)
4) Cool air prevention mode (Defrosting mode)
5) Capacity increasing mode

(2) Hot adjust mode

- The fan controller becomes the hot adjuster mode for the following conditions.

1) When starting the Heat operation
2) When the thermoregulating function changes from OFF to ON.
3) When release the Heat defrosting operation

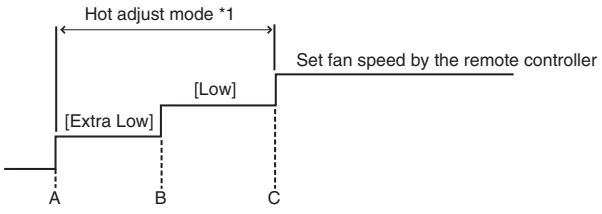

A: Hot adjust mode starts.
B: 5 minutes have passed since the condition A or the indoor liquid pipe temperature turned 95°F or more.
C: 2 minutes have passed since the condition A. (Terminating the hot adjust mode)

Note

*1 "STAND BY" will be displayed during the hot adjust mode.

(3) Preheating exclusion mode

- When the condition changes the auxiliary heater ON to OFF (thermoregulating or operation stop, etc.), the indoor fan operates in [Low] mode for 1 minute.

Note

This control is same for the model without auxiliary heater.

(4) Thermo OFF mode

- When the thermoregulating function changes to OFF, the indoor fan operates in [Extra low].

(5) Heat defrosting mode

- The indoor fan stops.

3. Drain pump

(1) Drain pump control

- The drain pump turns ON for the specified amount of time when any of the following conditions is met:

1) ON for 3 minutes after the operation mode is switched from Cool or Drying to another operation mode (Fan).
2) ON for 6 minutes after the float switch is submerged in the water when the float switch control judges the sensor is in the water.

(2) Float switch control

- Float switch control judges whether the sensor is in the air or in the water by turning the float switch ON/OFF.

In the water : Detected that the float switch is ON for 15 seconds.
In the air : Detected that the float switch is OFF for 15 seconds.

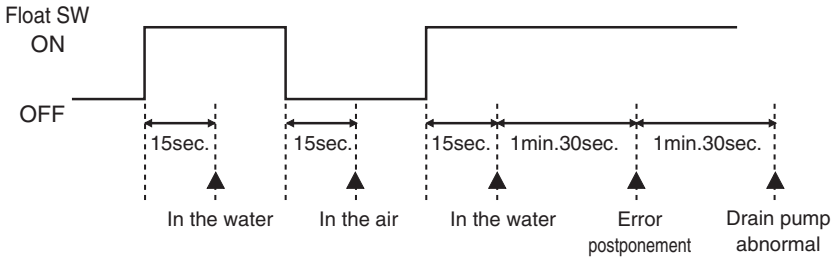

5. Auto operation [Automatic Cool / Heat change over operation]

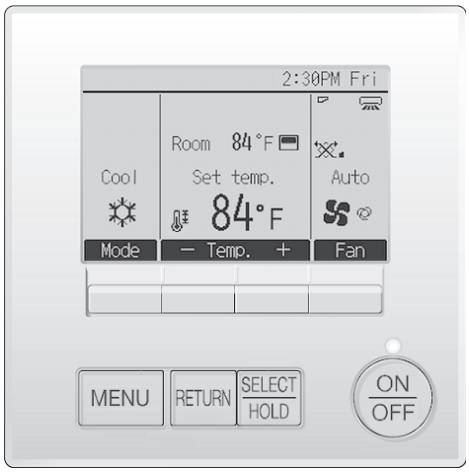

<How to operate>

1. Press POWER [ON/OFF] button.
2. Press the [F1] button to display Auto.
3. Press the [F2] or [F3] button to set the desired temperature.

Note

The set temperature changes 2°F when the [F2] or [F3] button is pressed one time. Automatic 67 to 83°F

1. Initial value of operation mode

(1) Heat mode for room temperature < Desired temperature
(2) Cool mode for room temperature ≥ Desired temperature

2. Mode change

(1) Heat mode -> Cool mode
Room temperature ≥ Desired temperature + 3°F. or 3 min. has passed
(2) Cool mode -> Heat mode
Room temperature ≤ Desired temperature - 3°F. or 3 min. has passed

3. Cool mode

(1) Same control as Cool operation

4. Heat mode

(1) Same control as heat operation
The value "3°F" is modifiable from 1.8°F to 9°F by maintenance tool.

6. When unit is stopped control mode

1. Drain pump

(1) Drain pump control

♦The drain pump turns ON for the specified amount of time when any of the following conditions is met:

1) ON for 3 minutes after the operation mode is switched from Cool or Drying to another operation mode (Fan).
2) ON for 6 minutes after the float switch is submerged in the water when the float switch control judges the sensor is in the water.

(2) Float switch control

♦Float switch control judges whether the sensor is in the air or in the water by turning the float switch ON/OFF.
In the water : Detected that the float switch is ON for 15 seconds.
In the air : Detected that the float switch is OFF for 15 seconds.

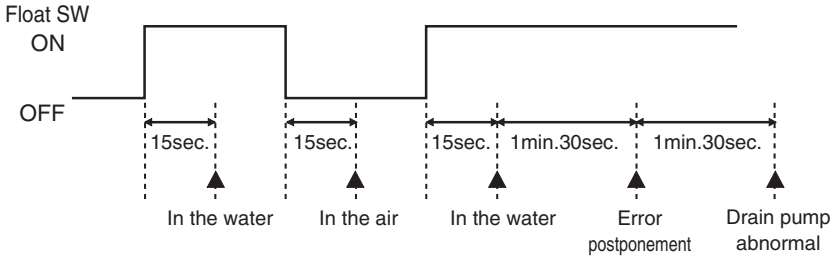

7. Heater control

1. Control specifications and DIP S/W setting

♦Table 1 shows the function settings the field-installed heater. Select the desired pattern in the table below, and set the DIP SW on the outdoor and indoor units as shown in Table 1.

Table.1

Outdoor unit setting	Condition of outdoor unit		DIP S/W (Indoor unit)*1		Heater control			
			SW 3-2	SW 3-4	Pattern	Defrost	Error	Refrig-erant leakage
DIP S/W OFF *3	N / A		OFF	-	Heater not Available			
			ON	OFF	Heater Available	OFF	OFF	OFF
			ON	ON	Heater Available	ON	ON*2	OFF*4
DIP S/W ON *3	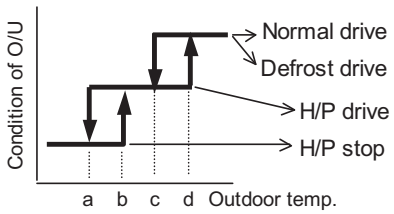 Parameters a/b/c/d are set by maintenance tool.	Normal drive	OFF	-	Heater not Available			
			ON	OFF	Heater Available	OFF	OFF	OFF
			ON	ON	Heater Available	ON	ON*2	OFF*4
		Defrost drive H/P drive H/P stop	OFF	-	Heater not Available			
			ON	OFF	Heater Available	OFF	OFF	OFF
			ON	ON	Heater Available	ON	ON*2	OFF*4

*1 Default settings: SW3-2 OFF, SW3-4 OFF
*2 Heater On signal can not be output in the following cases for safety reasons.
- Return air temperature sensor fault (Error code: 5101)
- Indoor unit fan operation error (Error code: 4109)
- Indoor unit fan motor error (Error code: 4114)
- Transmission error (Error code: 6***, 7***)
- When heating mode is prohibited
- When demand control or capacity save is set to 0%
- During refrigerant recovery mode on Smart-Multi (NTXMSM) system
- For a few minutes when changing from thermo OFF to ON or ON to OFF in R2/WR2 system

*3 Please set function codes that are shown on outdoor unit service manuals (DIP S/W Functions).
*4 Heater will not operate during the following error code.
Error code: 1521, 5558

♦Table 2 shows how the field-installed heater is controlled.

Table.2 [Heater Control Table]

Mode Change	Condition				
EH1 ON	(To -T_{RA}) > 2.7 °F [1.5 °C]	AND	T_{RA} has not increased by 0.9 °F [0.5°C] in X min		
EH2 ON	EH1 ON for > 5 min	AND	(To -T_{RA}) > 2.7 °F [1.5 °C]	AND	T_{RA} has not increased by 0.9 °F [0.5°C] in 5 min
EH1 OFF EH2 OFF	(To -T_{RA}) ≤ 0.9 °F [0.5 °C]				

KEY
- EH1: Electric Heater 1
- EH2: Electric Heater 2
- To: Set point temperature
- T_{RA}: Return Air temperature
- X: Time delay (Selectable. Default is 20 min. Selectable to 1, 5, 10, 15, or 25 min)

♦Table 3 shows how the time delay is selected.

Table.3 [Time Delay Selection Table]

Function Setting *1	Action *3
108-5	Set Time Delay to 1 minutes
108-6	Set Time Delay to 5 minutes
108-1	Set Time Delay to 10 minutes
108-2	Set Time Delay to 15 minutes
108-3	Set Time Delay to 20 minutes *2
108-4	Set Time Delay to 25 minutes

*1 Time delay can only be selected with MA controller. If use of a non-MA controller is desired, the time delay must first be selected with the MA controller. Then the non-MA controller can be attached and used.
*2 The default time delay setting is 20 minutes.
*3 Time delays are approximate.

♦Chart 1 and Table 4 show an example of heater operation.

Chart 1 [Heater Operation Example]

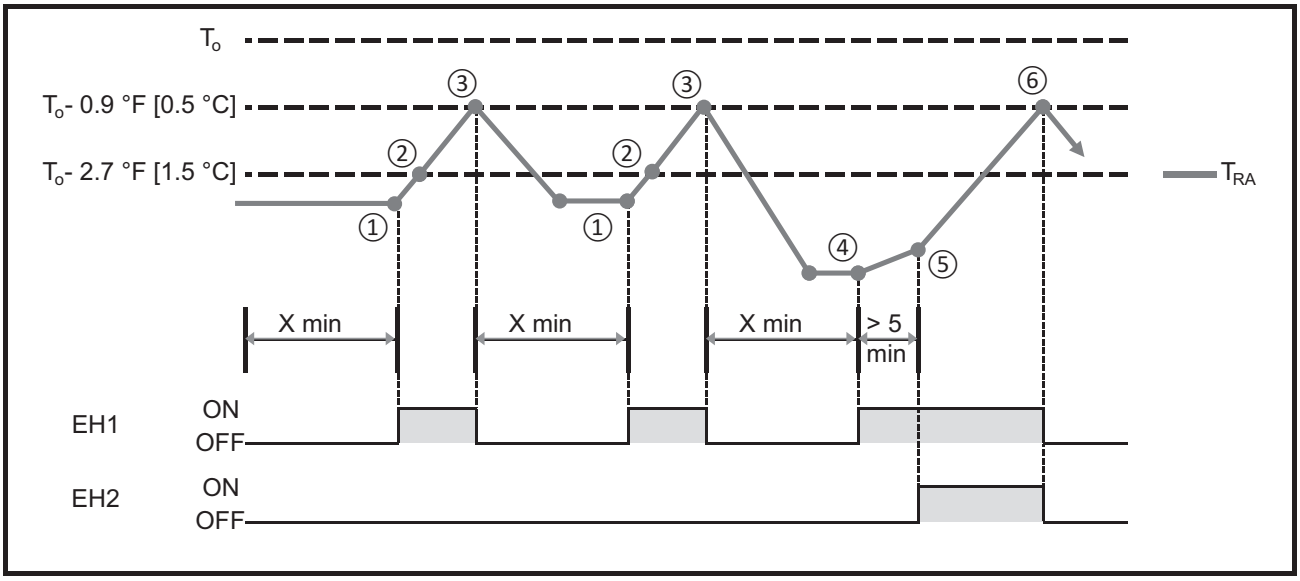

Table.4 [Heater Operation Example]

Step	Condition			Result
①	(To -T_{RA}) > 2.7 °F [1.5 °C]	AND	T_{RA} has not increased by 0.9 °F [0.5°C] in X min	EH1 ON
②	(To -T_{RA}) ≤ 2.7 °F [1.5 °C]	AND	T_{RA} increasing faster than 0.9 °F [0.5°C] in 5 min	EH2 not ON
③	(To -T_{RA}) ≤ 0.9 °F [0.5°C]			EH1 OFF
④	(To -T_{RA}) > 2.7 °F [1.5 °C]	AND	T_{RA} has not increased by 0.9 °F [0.5°C] in X min	EH1 ON
⑤	(To -T_{RA}) > 2.7 °F [1.5 °C]	AND	T_{RA} not increasing faster than 0.9 °F [0.5°C] in 5 min	EH2 ON
⑥	(To -T_{RA}) ≤ 0.9 °F [0.5°C]			EH1 OFF EH2 OFF

♦Chart 2 show how heater is on.

The software has the function to turn on electric heater 5 minutes after turning on remote controller in case that outdoor unit cannot operate in heating mode because the system is in cooling priority mode. This function is available when function setting No.123 is set to “2”.

Chart 2 [How Heater is ON]

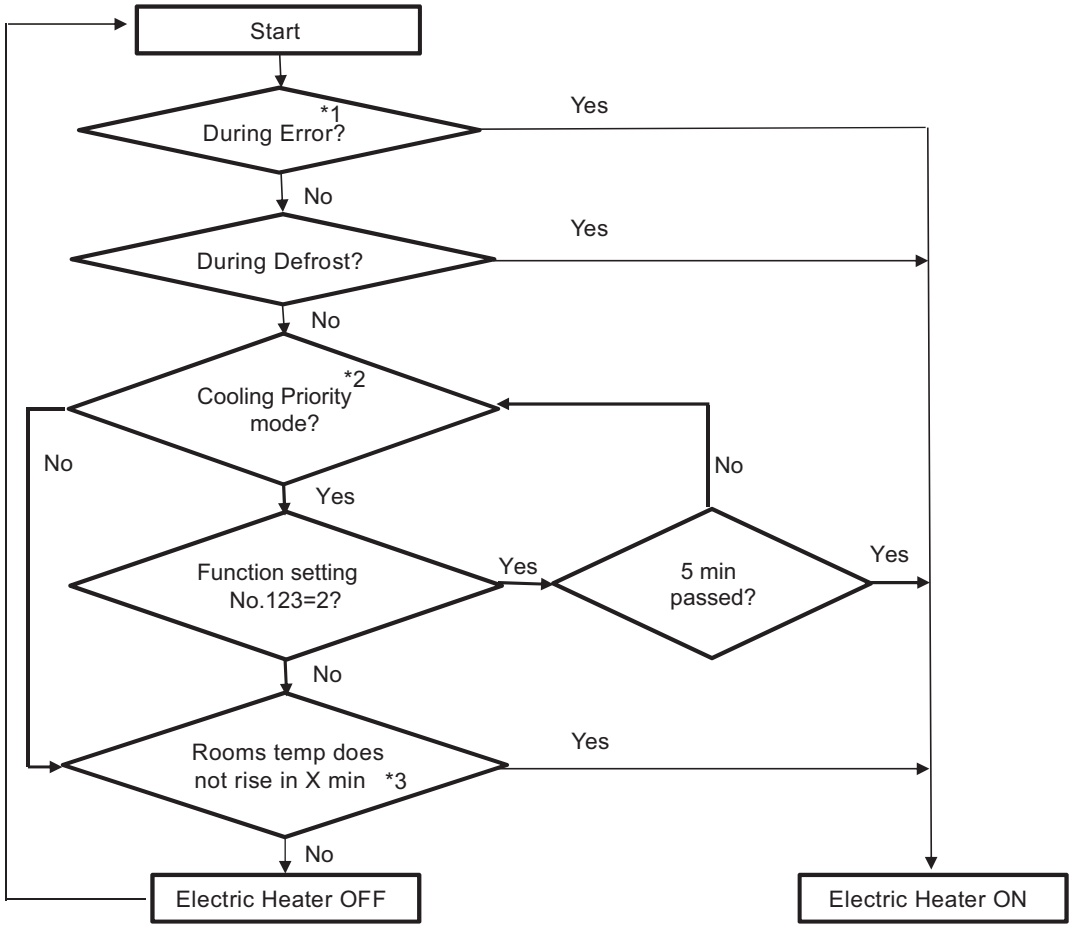

*1. The heater will not turn on in the error of TH1 thermistor or fan motor.
*2. See WT06231 for the details of this function.
*3. X (time delay) default is 20 min and changeable by function setting, see Table 3.

Note

(1) Turning on the heater with the fan setting set to OFF requires that the DIP S/W and connectors on the indoor units are set on site.

Fan control

<table>
<tr><th rowspan="2">Pattern</th><th rowspan="2">CN22 for FAN control (PAC-YU25HT)</th><th rowspan="2">DIP SW3-2 (Indoor unit)</th><th rowspan="2">DIP SW3-4 (Indoor unit)</th><th colspan="2">in error *1 *5</th><th colspan="2">in defrost</th><th colspan="2">All modes other than defrost and error</th></tr>
<tr><th>Fan</th><th>Heater</th><th>Fan</th><th>Heater</th><th>Fan</th><th>Heater</th></tr>
<tr><td>1</td><td rowspan="3">Disabled</td><td rowspan="5">ON</td><td>OFF</td><td>FAN ON *2</td><td>OFF</td><td>Stop</td><td>OFF</td><td>High *3</td><td>ON</td></tr>
<tr><td rowspan="2">2</td><td rowspan="2">ON</td><td>High
(DIP SW1-7: ON and SW1-8: OFF)
or
(DIP SW1-7: OFF and SW1-8: ON)</td><td>ON</td><td>High
(DIP SW1-7: ON and SW1-8: OFF)
or
(DIP SW1-7: OFF and SW1-8: ON)</td><td>ON</td><td colspan="2">In heating Thermo-Off
Fan: High (DIP SW1-7: ON and SW1-8: OFF) or (DIP SW1-7: OFF and SW1-8: ON)
Heater: ON</td></tr>
<tr><td>Very low
(DIP SW1-7: OFF and SW1-8: OFF)
STOP
(DIP SW1-7: ON and SW1-8: ON)</td><td>OFF</td><td>Very low
(DIP SW1-7: OFF and SW1-8: OFF)
STOP
(DIP SW1-7: ON and SW1-8: ON)</td><td>OFF</td><td colspan="2">Very low (DIP SW1-7: OFF and SW1-8: OFF) STOP (DIP SW1-7: ON and SW1-8: ON)
Heater: OFF</td></tr>
<tr><td>3</td><td rowspan="2">Enabled</td><td>OFF</td><td>FAN ON *2</td><td>OFF</td><td>Stop</td><td>OFF</td><td rowspan="2">*4</td><td rowspan="2">ON</td></tr>
<tr><td>4</td><td>ON</td><td>FAN ON *2</td><td>ON</td><td>Stop</td><td>ON</td></tr>
</table>

*1 Heater will not operate during all error modes.

*2 The fan speed in the Heating Thermo-OFF mode depends on the settings of DIP-SW 1-7 and 1-8. Refer to IX-[1]-5-1 Function setting.

*3 While the heater is on, the fan will operate at high speed regardless of the fan setting on the remote controller.

*4 The fan speed depends on the settings of the remote controller. The heater turns on regardless of the fan speed.

*5 The fan stops and the heater turns off, depending on the type of error.

*** If a heater is installed in the duct, do not use CN22. By doing so, the fan will turn off when the heater is on, which may result in fire.**

(2) Back-up heating will not be performed when the heater turns on while demand control is performed (not a request item).

(3) Refer to outdoor unit service manuals (DIP S/W Functions) and make the settings for the dip switches on the outdoor unit control board before switching on the power.

2. Time Delay canceled
   Information above is about when the Time Delay function is available.
   Function setting 107 set to 2 enables the Time Delay function, and set to 1 cancels the function.
   Detailed information when the Time Delay function is canceled is as follows.

Table.5 Function setting 107 = 1 (Time Delay canceled)

Outdoor unit setting	Condition of outdoor unit		DIP S/W (Indoor unit)*1	Heater control				
			SW 3-4	EH1	EH2	Defrost	Error	Refrig-erant leakage
DIP S/W OFF *3	N / A		OFF	Heater Avail-able	Heater not Avail-able	OFF	OFF	OFF
			ON	Heater Available		ON	ON*2	OFF*4
DIP S/W ON *3	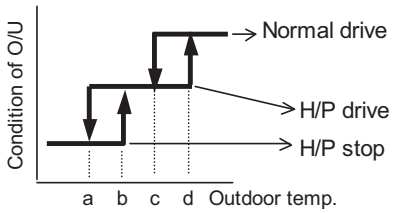 Parameters a/b/c/d are set by maintenance tool.	Normal drive	OFF	Heater not Available		OFF	OFF	OFF
			ON			ON	OFF	OFF
		H/P drive H/P stop	OFF	Heater Avail-able	Heater not Avail-able	OFF	OFF	OFF
			ON	Heater Available		ON	ON*2	OFF*4

*1 Default settings: SW3-2 OFF, SW3-4 OFF
*2 Heater On signal can not be output in the following cases for safety reasons.
- Return air temperature sensor fault (Error code: 5101)
- Indoor unit fan operation error (Error code: 4109)
- Indoor unit fan motor error (Error code: 4114)
- Transmission error (Error code: 6***, 7***)
- When heating mode is prohibited
- When demand control or capacity save is set to 0%
- During refrigerant recovery mode on Smart-Multi (NTXMSM) system
- For a few minutes when changing from thermo OFF to ON or ON to OFF in R2/WR2 system

*3 Please set function codes that are shown on outdoor unit service manuals (DIP S/W Functions).
*4 Heater will not operate during the following error code.
Error code: 1521, 5558

Table.6 Heater ON/OFF condition for function setting 107 = 1 (Time Delay canceled)

DIP SW3-4	ON	ON	OFF
DIP SW3-2	ON	OFF	ON/OFF
Mode Change	Condition		
EH1 ON	$(T_O - T_{RA}) > 1.5°C + Thh1$	$(T_O - T_{RA}) > 0.5°C + Thh1$	$(T_O - T_{RA}) > 1.5°C + Thh1$
EH2 ON	$(T_O - T_{RA}) > 2.0°C + Thh1$	$(T_O - T_{RA}) > 1.0°C + Thh1$	Not Available
EH1 OFF	$(T_O - T_{RA}) \leq 0.5°C$	$(T_O - T_{RA}) \leq -0.5°C$	$(T_O - T_{RA}) \leq -0.5°C$
EH2 OFF			

EH1: Electric Heater 1
EH2: Electric Heater 2
T_O: Set point temperature
T_{RA}: Return air temperature
Thh1: The additional differential for heater output can be set by function setting 84 and 85 as shown in Table 7 below.

Table.7 Function setting 84 and 85

No.84	°C	No.85	°C
1	1	1	0.1
2	2	2	0.2
3	3	3	0.3
4	4	4	0.4
5	5	5	0.5
10	0	6	0.6
		7	0.7
		8	0.8
		9	0.9
		10	0.0

Disclaimer

Use of this setting may conflict with certain local energy efficiency standards. Please check local requirements. Cancelation of the Time Delay function is intended for use in the Canadian market only and may not be reproduced or distributed without express written permission of Mitsubishi Electric Trane HVAC US LLC.

3. PAC-YU25HT (Optional Parts) installation

This section describes installation of the External Heater Adapter that connects to CITY MULTI air conditioner indoor unit. This products is the special wiring parts to drive an electric heater with the air conditioner.

(1) Parts list

♦Check that the following parts are included in the package.

1) External output cable.....2 in total
Two types of cables with different connectors are included.

2) Panel heater connector.....3 in total
White: 1
Green: 2 (2 types)

(2) Connection to the indoor unit

- Use the cables that fit the connectors on the indoor unit control board.

1) External output cable (with a yellow connector)
This cable is used to connect a relay circuit for an interlocked operation with either an electric or a panel heater.Select the heater output pattern (1st = CN24 or 2nd = CN24A) to use, and connect the cable to the connector on the indoor unit control board that corresponds to the selection.

2) Panel heater connector (with a green connector)
This connector is used to perform an interlocked operation with a panel heater. Depending on the indoor unit control board specification, connect the cable to CN22 as appropriate.

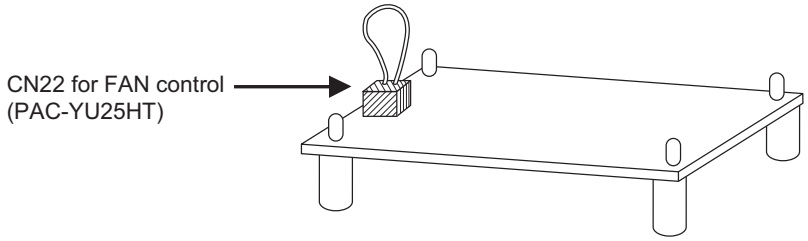

(3) Wiring

- A basic connection method is shown below.

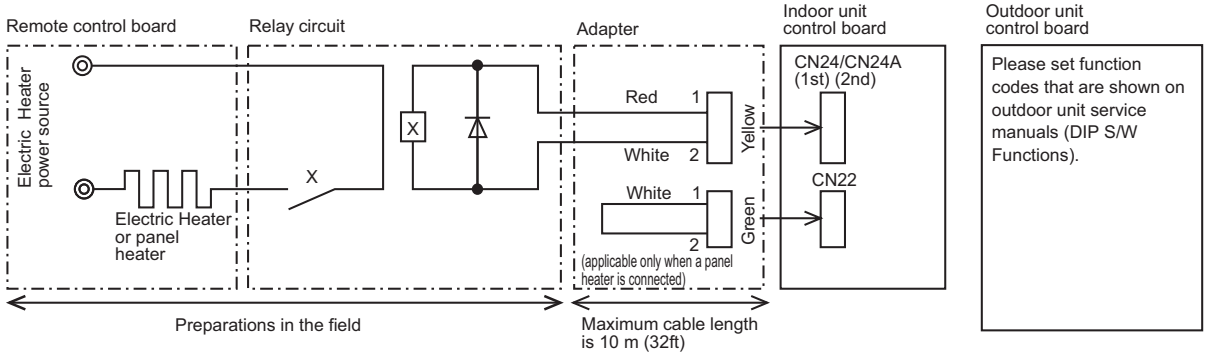

- For relay X, use the specifications given below.
  Operation coil
  Rated voltage: 12VDC
  Power consumption: 0.9W or less

* Use the diode that is recommended by the relay manufacturer at both ends of the relay coil.

- The length of the electrical wiring for the PAC-YU25HT is 2 meters (6-1/2 ft.)
- To extend this length, use sheathed 2-core cable.

Control cable type: CVV, CVS, CPEV or equivalent.
Cable size: 0.5 mm^2 ~ 1.25 mm^2 (16 to 22 AWG)
Don't extend the cable more than 10 meters (32ft)

Recommended circuit

Wiring diagram

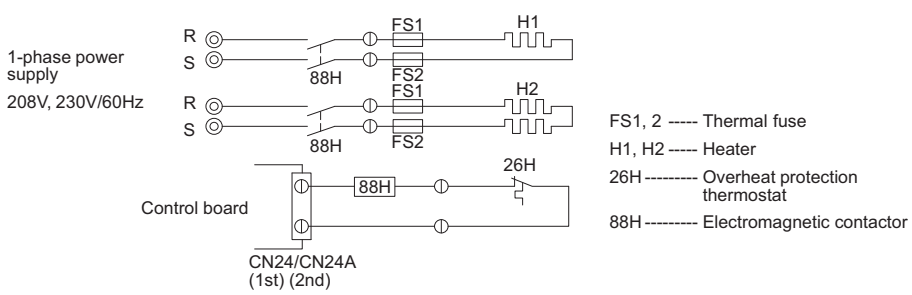

(4) Wiring restrictions

- Keep the length of the cable connecting to the circuit board of the indoor unit shorter than 10 meters (32ft).
- Longer than 10 meters (32ft) could cause improper operation.
- Use a transit relay when extending wiring such as remote wiring.

[1] Wiring for interlock between the refrigerant leak sensor output and local equipment

Using the external output of the air conditioning system allows the refrigerant leak output function to interlock with local equipment such as dampers.
For the interlock with local equipment, consider the wiring referring to the following.

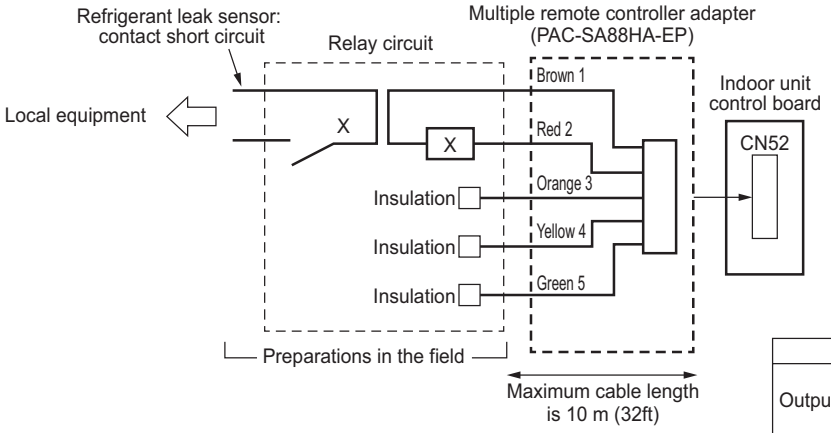

Signal		Polarity	Color
Output	COM	+	Brown
	Leakage	–	Red

X: Relay (Coil with fixed 12 VDC, a power consumption of 0.9 W or less)
Maximum total of all signal outputs is 80 mA.

When using the leak output function of CN52, set function setting No. 168 to "5."

Function setting No. 168	Remote display switch 2	Initial setting
1	Disabled	○
5	A signal will be output when a refrigerant leak is detected or the leak sensor fails.	

*When the function setting is set to "5," the Thermo-ON signal and the fan output signal that are set by SW1-5 will not be output from CN52.

*When setting function setting No. 168 to "5," check that No.169 is set to "1."

[1] Troubleshooting

1. Check methods

1. Component and check points

(1) Thermistor

- Room temperature thermistor (TH21)
- Liquid pipe thermistor (TH22)
- Gas pipe thermistor (TH23)

Disconnect the connector and measure the resistance between terminals with a tester.
(Ambient temperature 10°C - 30°C[50°F-86°F])

Normal	Abnormal
4.3kΩ - 9.6kΩ	Open or short

(Refer to the thermistor characteristic graph below.)

1) Thermistor characteristic graph

Low-temperature thermistor

- Room temperature thermistor (TH21)
- Liquid pipe thermistor (TH22)
- Gas pipe thermistor (TH23)
- Drain sensor (DS)

- Thermistor R_0 = 15 kΩ±3%
- Multiplier of B = 3480 kΩ±2%

$$Rt = 15 \exp \{ 3480(\frac{1}{273+t} - \frac{1}{273}) \}$$

0°C	32°F	15kΩ
10°C	50°F	9.6kΩ
20°C	68°F	6.3kΩ
25°C	77°F	5.2kΩ
30°C	86°F	4.3kΩ
40°C	104°F	3.0kΩ

(A) Temperature (°C)[°F]

(B) Resistance (kΩ)

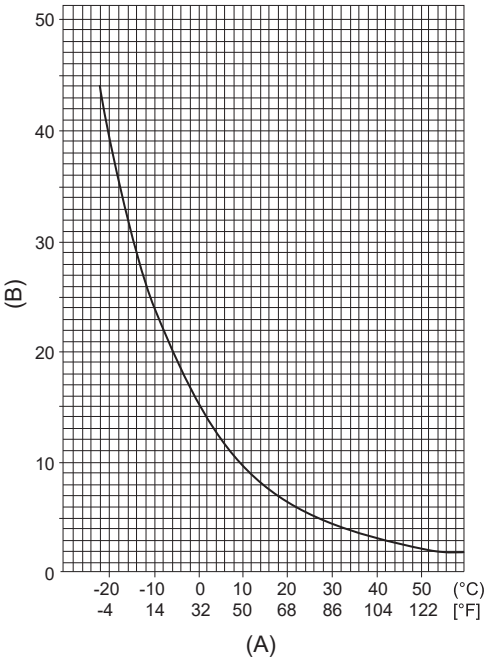

(2) Fan motor (CNMF)

Refer to the page on "DC fan motor (fan motor/indoor control board)."

(3) Linear expansion valve

Disconnect the connector, and measure the resistance between terminals with a tester.
Refer to the next page for details of the linear expansion valve.

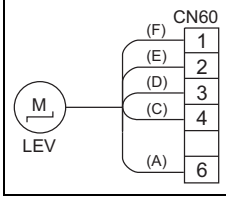

Normal				Abnormal
1-6 White-Red	2-6 Yellow-Red	3-6 Orange-Red	4-6 Blue-Red	Open or short
(150Ω) ±10%				

(A) Red (E) Yellow

(C) Blue (F) White

(D) Orange

1) Summary of linear expansion valve (LEV) operation

- The LEV is operated by a stepping motor, which operates by receiving a pulse signal from the indoor control board.
- The LEV position changes in response to the pulse signal.

Indoor control board and LEV connection

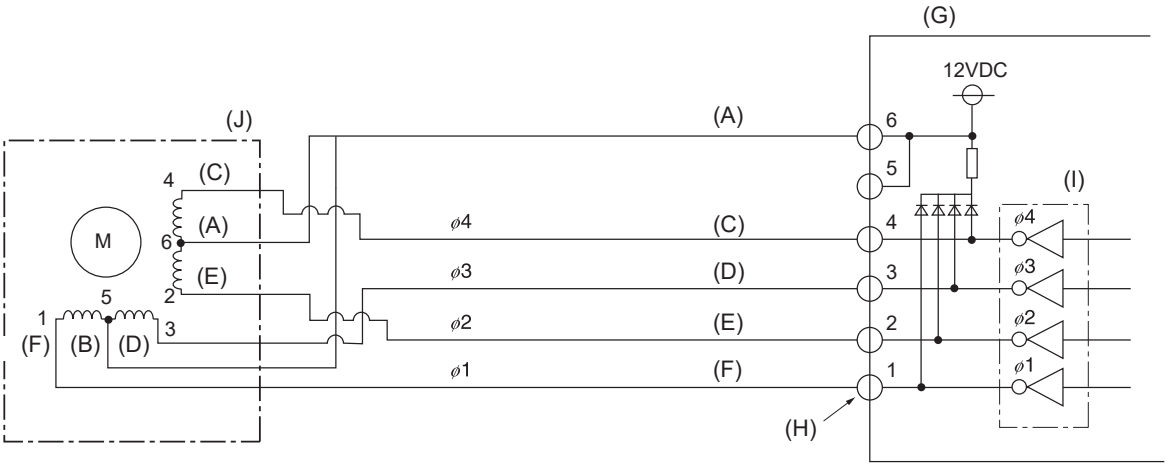

(A)	Red	(G)	Control board
(C)	Blue	(H)	Connection (CN60)
(D)	Orange	(I)	Drive circuit
(E)	Yellow	(J)	Linear expansion valve
(F)	White		

Pulse signal output and valve operation

Phase number	Output pulse			
	1	2	3	4
ø1	ON	OFF	OFF	ON
ø2	ON	ON	OFF	OFF
ø3	OFF	ON	ON	OFF
ø4	OFF	OFF	ON	ON

The output pulse changes in the following order:
When the valve closes 1 -> 2 -> 3 -> 4 -> 1
When the valve opens 4 -> 3 -> 2 -> 1 -> 4

- When the valve position remains the same, all output signals will be OFF.
- If any output signal is missing or if the signal remains ON, the motor vibrates and makes clicking noise.

2) LEV operation

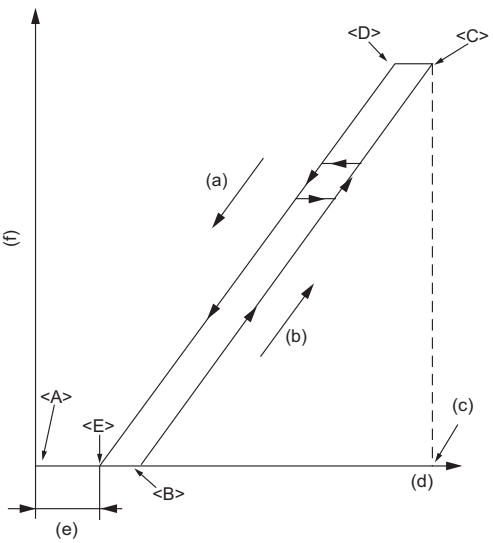

(a) Close

(b) Open

(c) Fully open valve (2000 pulses)

(d) No. of pulses

(e) Extra tightening (200 pulses)

(f) Valve opening degree

- When the power is turned on, a pulse signal of fully open pulse + 10% pulse is output (valve closure signal), to bring the valve to position <A>.
- When the valve is operating normally, it is free of vibration noise. If the valve locks or when it goes from point <E> to <A> in the figure, it makes louder noise than would be heard when there is an open phase.
- Check for abnormal sound/vibration by placing the metal tip of a screwdriver against the valve and the handle side against your ear.

3) Troubleshooting

Symptom	Checking Criteria	Remedy
Circuit failure on the microcomputer	Disconnect the connectors on the control board, and connect LEDs to test the circuit as shown below. 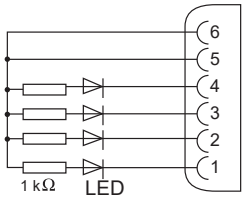 Pulse signals are output for 10 seconds when the main power is turned on. If there are LEDs that do not light up at all or remain lit after the pulses are turned off, there is a problem with the driving circuit.	Replace the indoor control board if driving circuit failure is detected.
Locked LEV	The motor will idle and make small clicking noise if it is run while the LEV is locked. If this clicking noise is heard both when the valve is fully closed and while it is being opened, it indicates a problem.	Replace the LEV.
Disconnected or shorted LEV motor coils	Measure the resistance between the coils with a tester (red-white, red-orange, Red-yellow, Red-blue). The normal range of resistance is 150Ω±10%	Replace the LEV.

Symptom	Checking Criteria	Remedy
Valve closure failure (leaky valve)	To check the LEV on the indoor unit, check the indoor unit liquid pipe temperature that appears on the operation monitor on the outdoor unit's multi control board while operating the indoor unit in question in the FAN mode and the other indoor units in the cooling mode. (A) Thermistor (TH22) 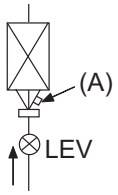 	Replace the LEV if the amount of leakage is great.
	Normally, the LEV is fully closed while the unit is in the FAN mode. If the valve is leaky, liquid pipe thermistor reading will be lower than normal. If it is significantly lower than the inlet temperature on the remote controller, valve closure failure is suspected. If the amount of leakage is insignificant, replacement of LEV is unnecessary unless it is causing a problem.	
Misconnections of connectors or contact failure	Perform a visual check for disconnected connectors. Perform a visual check of lead wire color.	Disconnect the connectors on the control board and perform a continuity test.

(4) Drain pump

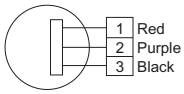

1. Check if the drain float switch works properly.
2. Check if the drain pump works and drains water properly in cooling operation.
3. If no water drains, confirm that the check code 2502 will not be displayed 10 minutes after the operation starts.

Note: The drain pump for this model is driven by the internal DC motor of controller board, so it is not possible to measure the resistance between the terminals.

Normal
Red–Black: Input 13V DC → The fan starts to rotate.
Purple–Black: Abnormal (check code 2502) if it outputs 0–13 V square wave (5 pulses/rotation), and the number of rotation is not normal.

(5) Drain float switch (CN4F)

Disconnect the connector, and measure the resistance between terminals with a tester.

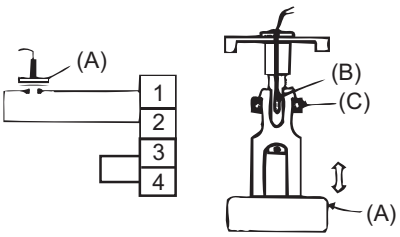

(A) Moving part
(B) Switch
(C) Magnet

Position of the moving part	Normal	Abnormal
Up	Short	(any position but short)
Down	Open	(any position but open)

(6) Refrigerant sensor

Measure the resistance between the terminals with a multimeter.

Normal	Abnormal
Below 10 Ω	Open (10 Ω or more)

After turning off the indoor unit breaker and leaving it for 5 minutes, measure the resistance value between the sensor terminals.

< Back side of the sensor >

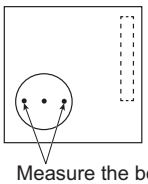

Measure the both sides of the sensor pin.

1) Troubleshooting

Error Code	Abnormal point and detection method	Cause	Countermeasure
5558	**Refrigerant sensor error** Abnormal if refrigerant sensor cannot detect errors normally.	1. The refrigerant sensor mounted on the indoor unit does not work. 2. The refrigerant sensor is not connected properly or the wire is broken.	Refer to the outdoor unit manual. *Be aware of the followings for TPEFY models. •While the error is being displayed, the indoor unit fan continues operating. •Ventilate the room well, make sure that there is no ignition source, and then turn off the power.
1521	**Refrigerant leakage** Abnormal if refrigerant leakage is detected by a refrigerant sensor.	1. Refrigerant leaks from the piping or the heat exchanger in the indoor unit. 2. The following items are used around the indoor unit. •Spray (LP gas including Freon, and whose main ingredient is propane and butane) •Aerosol insecticide (including ethanol) •Air spray painting (including dichloromethane) •Charcoal (charcoal fire) •Chemicals (such as ethanol)	
1522	**Refrigerant leakage / Refrigerant sensor error / Communication error**	•Refrigerant leak from the air conditioner or the piping •False detection (The refrigerant sensor reacted to other gas.) •A refrigerant sensor connected to the indoor unit has failed. •A refrigerant sensor is not installed in the indoor unit. •There is an abnormality in the communication line or communication system.	

2. DC fan motor (fan motor/indoor control board)

1. CAUTION
   - A high voltage is applied to the connector for connection to the fan motor (CNMF).
   - Do not unplug the connector CNMF with the unit energized to avoid damage to the indoor control board and fan motor.

2. Troubleshooting
   - Symptom: Indoor unit fan does not run.

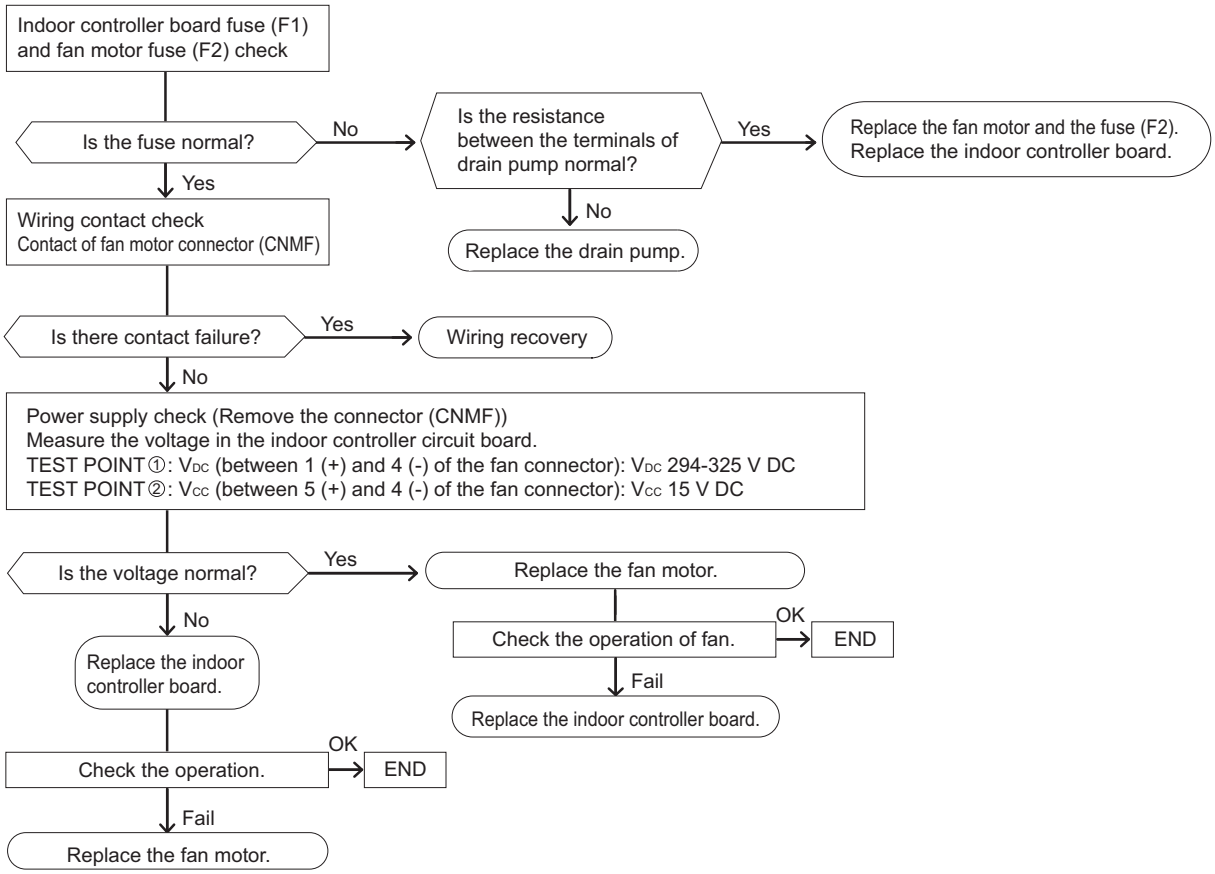

3. Address switch setting

Make sure that power to the unit is turned off.

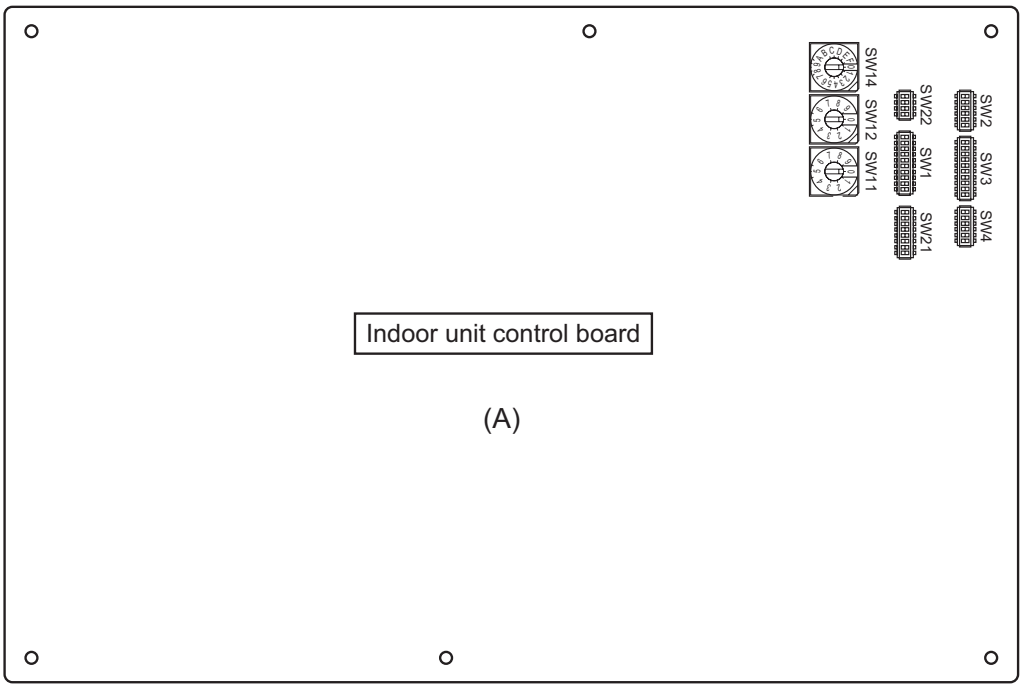

(A) Indoor unit control board

1. Address settings vary in different systems.
   Refer to the section on address setting in the outdoor unit installation manual.

2. Address is set with a combination of SW12 (10's digit) and SW11 (1's digit).
   To set the address to "3," set SW12 to "0" and SW11 to "3."
   To set the address to "25," set SW 12 to "2" and SW 11 to "5."

4. Voltage test points on the control board

1. TPEFYP006, 008, 012, 015, 018, 024, 027, 030, 036, 048, 054MA1M0A

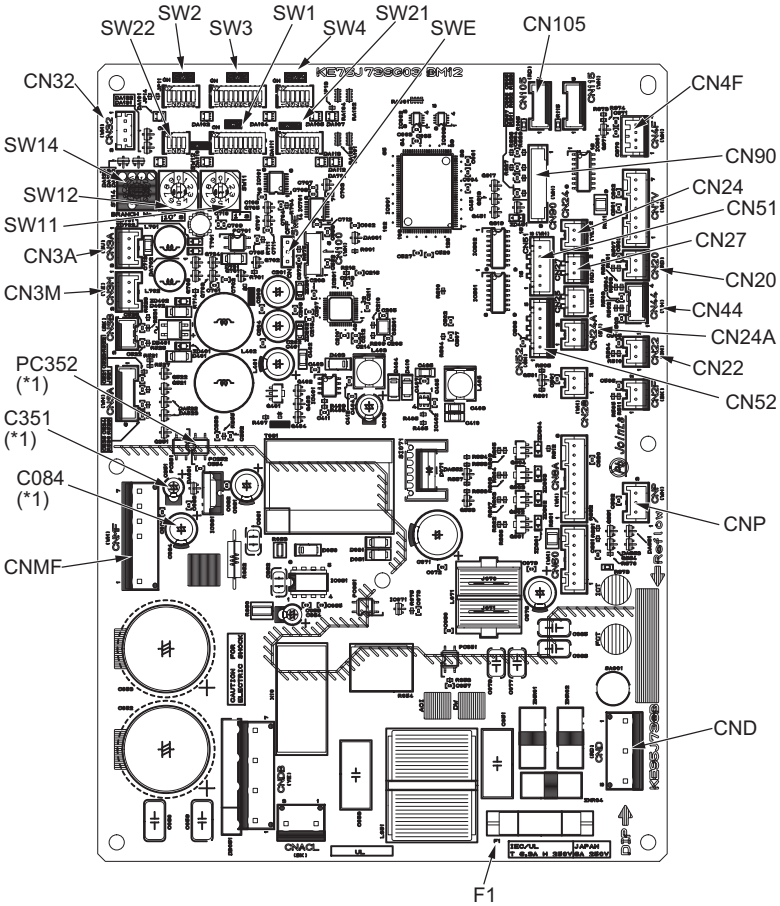

F1	Fuse (AC 250V 6.3A)
CND	Power supply voltage (208 - 230V)
CN3M	For M-NET transmission cable connection (24 - 30VDC (Between 1 and 3.))
SWE	Emergency operation
SW1	Function setting
SW2	Capacity setting
SW3	Function setting
SW4	Function setting
SW11	1's digit address set
SW12	10's digit address set
SW14	Branch No.
SW21	For static pressure selection
SW22	Wireless pair No.
CN32	Remote start/stop adapter
CN3A	For MA remote controller cable connection (10 - 13 VDC (Between 1 and 3.))
CN52	Remote display
CN51	Centralized control
CN44	Thermistor (liquid/gas temperature)
CN4F	Float thermistor
CN22	For fan control
CN20	Thermistor (Inlet temperature)
CN27	Damper
CN24	Heater control 1st
CN24A	Heater control 2nd
CN90	Wireless remote controller
CN105	IT terminal
CNMF	Fan motor output 1 - 4: 294 - 325 VDC 5 - 4: 15 VDC 6 - 4: 0 - 6.5 VDC 7 - 4: Stop 0 or 15 VDC Run 7.5 VDC (0 - 15 pulse)
CNP	Drain-up mechanism output (13 VDC (Between 1 and 3.))

(*1)

V_{FG}	Voltage on the (-) side of PC352 and C084 (Same with the voltage between 7 (+) and 4 (-) of CNMF)
V_{CC}	Voltage between the C084 pins 15 VDC (Same with the voltage between 5 (+) and 4 (-) of CNMF)
Vsp	Voltage between the C351 pins 0 VDC (with the fan stopped) 1 - 6.5 VDC (with the fan in operation) (Same with the voltage between 6 (+) and 4 (-) of CNMF)

5. Switch setting (Factory setting)

1. Function setting

(1) SW1

Switch position	Function	Switch setting	
		ON	OFF
1	Active Thermistor (Intake air thermistor)	Built-in thermistor on the remote controller	Indoor unit
2	Filter clogging detection	Available	Unavailable
3	Filter life	2500 h	100 h
4	Outdoor air intake	Enabled	Disabled
5	Remote display	Thermo-ON signal	Fan output
6	–	–	–
7	Fan speed at heating Thermo-OFF		
8			
9	Auto restart after power failure	Enabled	Disabled
10	Power start/stop	Enabled	Disabled

7	8	Fan speed notch in heating thermo off
OFF	OFF	Very low
ON	OFF	Low
OFF	ON	Preset fan speed
ON	ON	Stop

1) Indoor control board
Dipswitch settings must be made while the unit is stopped.

Factory setting

(2) SW3

Switch position	Function	Switch setting	
		ON	OFF
1	Unit type	Cooling only	Heat pump
2	Heater available	Heater available	Heater not available
3	-	-	-
4	Heater Control	Heater ON during defrost and error	Heater OFF during defrost and error
5	-	-	-
6	-	-	-
7	-	-	-
8	Heating 4-deg up	Disabled	Enabled
9	-	-	-
10	-	-	-

1) Indoor control board
Dipswitch settings must be made while the unit is stopped.

Factory setting

TPEFYP006, 018, 024MA1M0A

TPEFYP008, 015, 027, 030, 048, 054MA1M0A

TPEFYP012MA1M0A

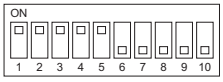

The figure at left shows that the switches 1 through 5 are set to ON and 6 through 10 are set to OFF.

2. Capacity code setting

(1) SW2

Dipswitch settings must be made while the unit is stopped.
Factory setting
The switches are set to correspond to the unit capacity.

TPEFYP006MA1M0A

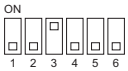

TPEFYP008MA1M0A

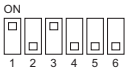

TPEFYP012MA1M0A

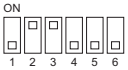

TPEFYP015MA1M0A

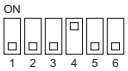

TPEFYP018MA1M0A

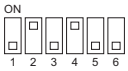

TPEFYP024MA1M0A

TPEFYP027MA1M0A

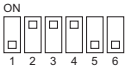

TPEFYP030MA1M0A

TPEFYP036MA1M0A

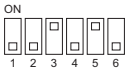

TPEFYP048MA1M0A

TPEFYP054MA1M0A

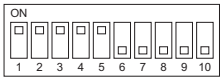

The figure at left shows that the switches 1 through 5 are set to ON and 6 through 10 are set to OFF.

3. Model setting

(1) SW4

Dipswitch settings must be made while the unit is stopped.

Factory setting
Please see the WIRING LABEL on the control box.

Note:
Changes made to the dipswitches SW1, SW2, and SW3 will become effective when the unit comes to a stop (remote controller off). There is no need to power cycle the unit.

4. Power voltage setting

(1) SW21-6

Dipswitch settings must be operated with the main power turned OFF.

Factory setting
Please see the WIRING LABEL on the control box.

Set SW21-6 to OFF side when the power supply is 230 volts.
When the power supply is 208 volts, set SW21-6 to ON side.

5. External static pressure

Five levels of external static pressure are available for selection.
Set the setting either by using the switches on the control board (SW21-1, SW21-2, and SW21-5) or from the function selection screen on the remote controller.

Note:

- **When the static pressure setting was set from the remote controller, the actual setting and the switch setting on the control board may not match because the latest setting from the remote controller overrides the previous setting. To check the latest static pressure setting, check it on the remote controller, not on the switch.**
- **If the static pressure setting for the duct is lower than that for the unit, the fan of the unit may repeat start/stop, and the outdoor unit may remain in a stopped state. Match the static pressure settings for the unit to that for the duct.**

To set the external static pressure with the switches on the control board

External static pressure	SW21-1	SW21-2	SW21-5	Initial setting
35 Pa	OFF	OFF	OFF	
50 Pa	ON	OFF	OFF	○
70 Pa	OFF	ON	ON	
100 Pa	OFF	OFF	ON	
150 Pa	ON	OFF	ON	

To set the external static pressure from the function selection screen on the remote controller (TAR-43MAAUB)
Follow the instructions below and the instructions detailed in the remote controller manual for how to set the switches.
1. Set the function setting No. 32 (Switch setting/Function selection) to “2”.
2. Set the function setting No. 8 and No. 10 to appropriate values, according to the external static pressure.

Selection	Function setting No.	Current setting
	No. 32	
Switch setting	1	
Function selection	2	

External static pressure	Function setting No.		Initial setting	Current setting
	No. 8	No. 10		
35 Pa	2	1		
50 Pa	3	1	○	
70 Pa	1	2		
100 Pa	2	2		
150 Pa	3	2		

[Important]
Be sure to write down the settings for all functions in the “Current setting” row if any of the initial settings has been changed.

6. 1s and 10ths digits
(1) SW11, SW12 (Rotary switch)

Address settings must be made while the unit is stopped.

Factory setting

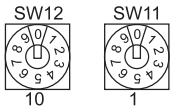

7. Connection No. setting
(1) SW14 (Rotary switch)
This switch is used when the unit connected to an R2 series of outdoor unit.

Factory setting

Note:
Changes to the dipswitches SW11, SW12, SW14, and SW15 must be made while the unit is stopped and the remote controller is OFF.

8. CNSB (large space configuration)

♦CNSB short circuit connector (enables/disables settings for the refrigerant sensor)

For large space configuration, remove the CNSB short circuit connector from the indoor unit circuit board to disable the built-in refrigerant sensor in the indoor unit. For details on large space configuration, refer to the R32 City Multi Technical Manual (R32 Outdoor unit) or Installation Manual (R454B Outdoor unit).

Short circuit connector	Built-in refrigerant sensor on the indoor unit	Initial setting
Connected	Enabled	○
Disconnected	Disabled	

[1] Disassembly Procedure

1. Control box

1. Removing the control box cover

(1) Remove the three fixing screws on the cover (A) to remove it.

♦Tighten screws to a torque of 2.0±0.2 N·m.

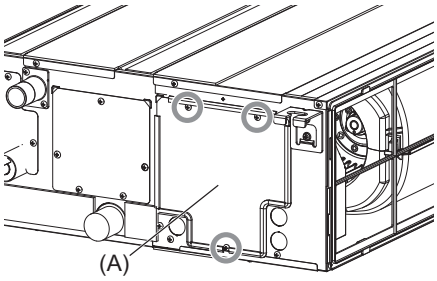

Fig.1

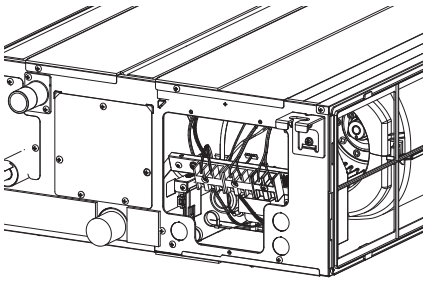

Fig.2

2. Thermistor (Intake air)

1. Remove the control box cover according to the procedure in section **1**.
2. Remove the thermistor.

(1) Pull out the thermistor holder (B) and thermistor (C) on the control box.

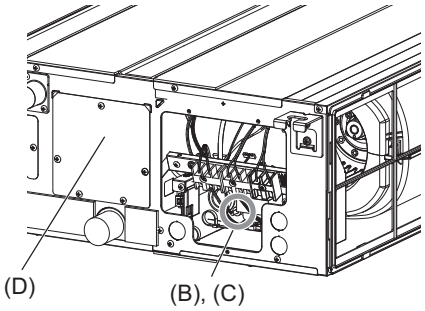

Fig.3

3. Drain pump

1. Remove the control box cover according to the procedure in section **1**.
2. Remove the drain pump.

(1) Remove the drain pump from connector (E) in control box.

(2) Remove the cover (D) and the drain pump.

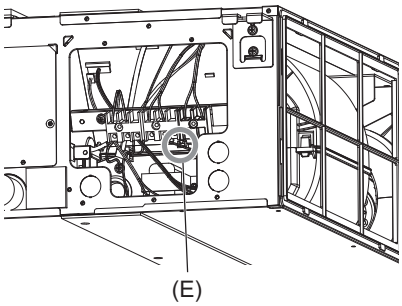

Fig.4

4. R32/R454B sensor

1. Remove the control box cover according to the procedure in section **1**.
2. Remove the R32/R454B sensor.

(1) Remove the R32/R454B sensor connector (CNSA) in control box.

Remove the fixing screw (F) to remove R32/R454B sensor.

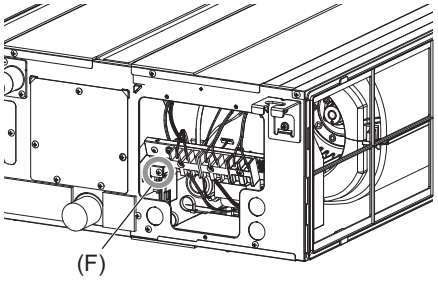

Fig.5

Note
- **The refrigerant sensor shall only be replaced with manufacturer approved sensor.**

5. Drain pan

Exercise caution when removing heavy parts.

1. Removing the filter and the bottom plate

(1) Push down the tab on the filter, and pull out the filter in the direction of the arrow 1.

(2) Remove the fixing screws on the bottom plate (G), (H) to remove it.

- Tighten screws to a torque of 1.4±0.2 N·m.

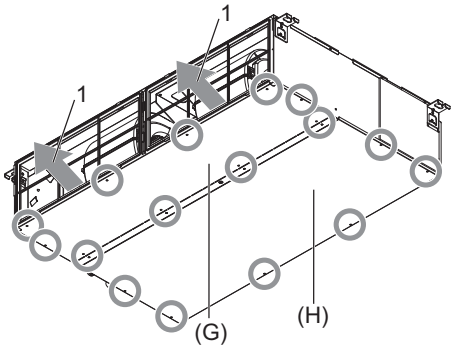

Fig.6

2. Removing the drain pan

(1) Pull out the drain pan in the direction of the arrow 2.

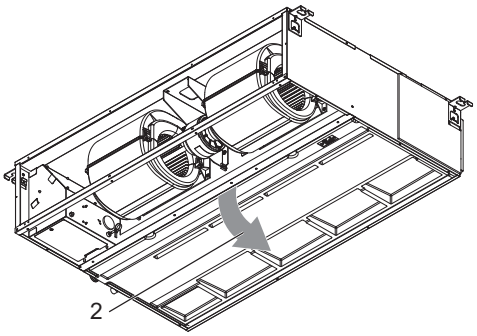

Fig.7

Note

- **Drain the water out of the drain pan before removing it.**

6. LEV

1. Removing the cover

(1) Remove the five fixing screws on the cover (J) to remove it.

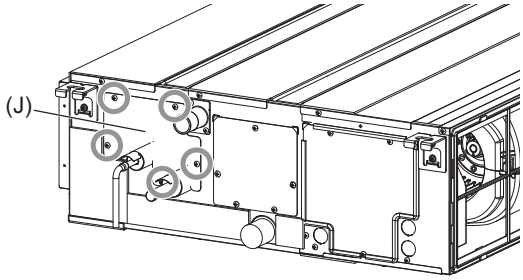

Fig.8

2. Removing the LEV

(1) Disconnect the LEV connector (CN60) from the control board.

(2) Twist the driving coil to remove it.

(3) When replacing the valve, make sure that the heat exchanger cover is removed according to the procedure in section **7**.
Before replacing the valve, protect the surrounding parts (e.g., insulation, wiring) from heat.

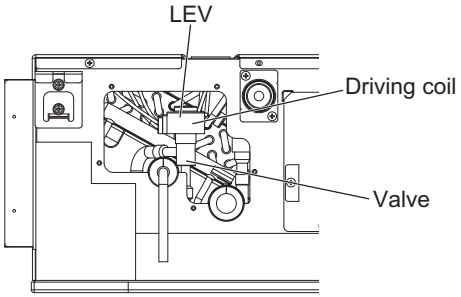

Fig.9

7. Thermistor (Gas pipe) (Liquid pipe)

Exercise caution when removing heavy parts.

1. Remove the drain pan according to the procedure in section **5**.

2. Removing the Heat exchanger cover

(1) Remove the three fixing screws on the heat exchanger cover (K) to remove it.

♦Tighten screws to a torque of 1.4±0.2 N·m.

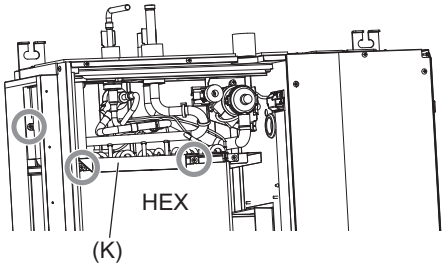

Fig.10

3. Removing the thermistor

(1) Remove the thermistor (L) from the thermistor holder (M) on the copper tube.

Thermistor size
Liquid pipe: ø8 mm
Gas pipe: ø6 mm

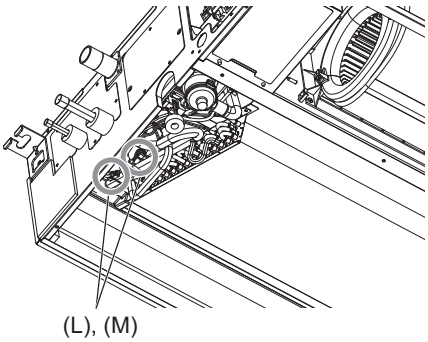

Fig.11

8. Fan and fan motor

Exercise caution when removing heavy parts.

1. Removing the filter and the bottom plate

(1) Push down the tab on the filter, and pull out the filter in the direction of the arrow 1.

(2) Remove the fixing screws on the bottom plate (P) to remove it.

♦Tighten screws to a torque of 1.4±0.2 N·m.

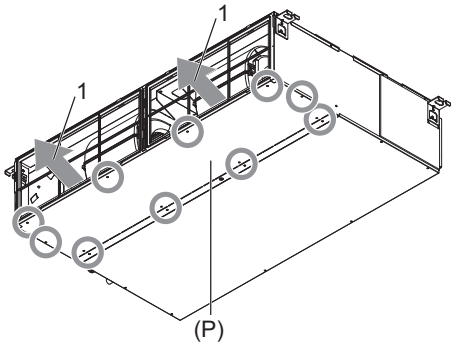

Fig.12

2. Removing the fan casing (bottom half)

(1) Squeeze the tabs on the fan casing to remove it in the direction of arrow 2.

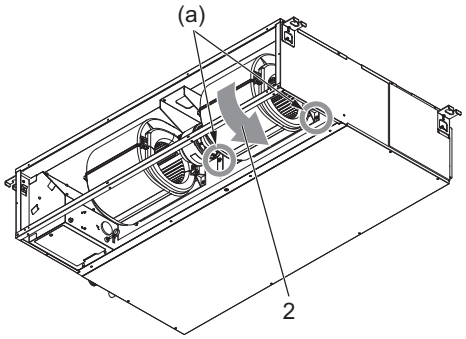

Fig.13

(a) Tab

3. Removing the motor cable

(1) Remove the motor cable threw the rubber bush.

4. Removing the fan motor and the Sirocco fan

(1) Loosen either of the two rubber joint (Q) fixing screws.

(2) To remove the Sirocco fans (b) and (c) of TPEFYP030,036,048,054MA1M0A, loosen only the screw (d) on the bearing support (R), and remove the other screws on it.

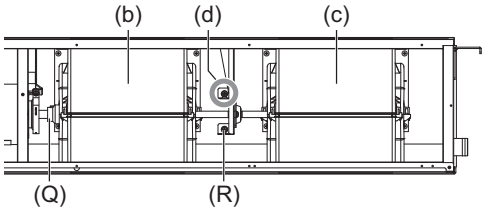

Fig.14

(3) Remove the two motor fixing screws to remove the motor and the Sirocco fan in the direction of arrow 3.

♦Tighten screws to a torque of 3.5±0.2 N·m.

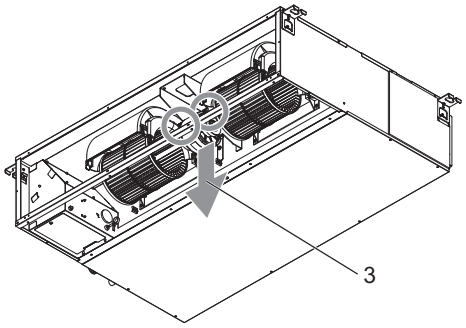

Fig.15

(4) Remove the four fan case fixing screws to take the top half of the fan casing off.

♦Tighten screws to a torque of 1.4±0.2 N·m.

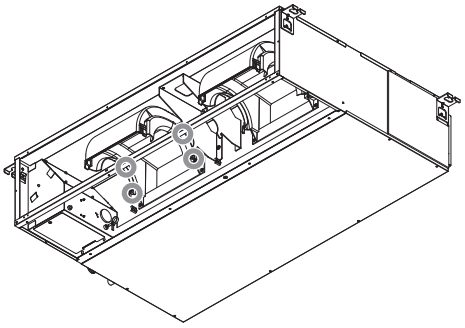

Fig.16

9. Heat exchanger

Exercise caution when removing heavy parts.

1. Remove the drain pan according to the procedure in section **5**.

2. Remove the heat exchanger cover according to the procedure in section **7-2**.

3. Removing the cover

(1) Remove the five fixing screws on the cover (S) to remove it.

♦Tighten screws to a torque of 2.0±0.2 N·m.

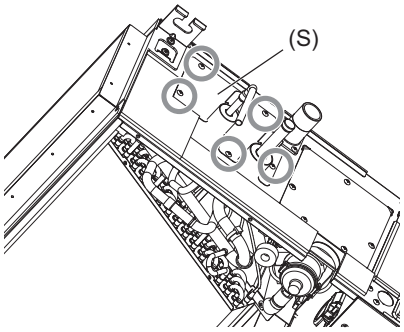

Fig.17

4. Removing the Heat exchanger

(1) Remove the fixing screws on the heat exchanger (T) to remove it.

♦Tighten screws to a torque of 1.4±0.2 N·m.

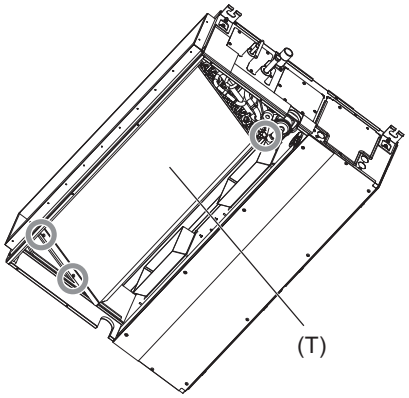

Fig.18

[1] Inspection and maintenance

1. Guideline for preventive maintenance

The following maintenance intervals indicate the estimated intervals of parts replacement and repair to be required as a result of periodic inspections. They do not necessarily mean that replacement is required at the maintenance intervals.
The maintenance intervals do not indicate the warranty period.

Parts	Inspection interval	Maintenance interval*
Motor (Fan, drain pump)	1 year	20,000 hours
Bearing		15,000 hours
Electrical box		25,000 hours
Heat exchanger		5 years
Electronic expansion valve		20,000 hours
Sensor (Thermistor, refrigerant sensor, etc)		5 years
Drain pan		8 years

- The table above shows the main parts. Check the maintenance contract for details.
- This maintenance interval is an estimated period until the day when the maintenance should be conducted to use the product safely for a long time.
  Make use of the table above for maintenance planning (such as planning budget for maintenance inspection cost).
  Depending on the contents of the maintenance contract, the actual inspection and maintenance intervals may shorter than those in the table above.
- The maintenance and inspection items may differ depending on maintenance providers.
  Please check with your maintenance provider when concluding a maintenance contract.

*The following usage conditions are assumed.
- Normal use without frequent START/STOPs (The number of START/STOPs is assumed to be less than 6 times per hour in normal use)
- Operating hours are assumed to be 10 hours per day/2500 hours per year.

When the equipment is used under the following conditions, the maintenance interval may be shortened.
- When equipment is used in an environment where temperature and humidity are high or change dramatically
- When equipment is used in an environment where power supply fluctuations (the distortion of voltage, frequency, and wave-form) are large (only within the allowable range)
- When equipment is used in an environment where the equipment may receive vibration or mechanical shock
- When equipment is used in an environment where dust, salt, toxic gases such as sulfur dioxide and hydrogen sulfide, and oil mist are present
- When equipment starts/stops frequently and operates for long periods (24-hour air-conditioning operation)

2. Recommended parts inspection interval

Parts	Inspection interval	Maintenance interval	Inspection items	Criteria	Measures
Long-life filter	1 year	5 years	♦Visual check for dirt or torn.	♦Filter element is seen through. ♦No torn or deformation.	♦Clean the filter if it is dirty. ♦Replace the filter if it is torn.
High-performance filter		1 year	♦Check for clogging. ♦Check the appearance.	♦No notable clogging in a short period of time. ♦No deformation or damage.	♦Replace the filter if it is clogged. ♦Replace the filter if it is deformed or damaged. ♦Replace the filter periodically.
Smoothing capacitor		10 years	♦Check the appearance of electrolytic capacitors.	♦No liquid leakage, deformation, or sleeve (outer film) shrinkage.	Replace the electrolytic capacitor if there is leakage, deformation, or shrinkage of the sleeve (outer film).
Fuse		10 years	♦Check the appearance.	No deformation or discoloration.	♦Replace the fuse if the circuit is cut off.
Motor (Fan, drain pump)		20,000 hours	♦Auditory check for operating sounds. ♦Measure the insulation resistance.	♦No abnormal sounds. ♦Insulation resistance must be 1 MΩ or above.	Replace the fan motor if an insulation problem is found.
Bearing		15,000 hours	♦Fill oil periodically.	♦No abnormal sound.	♦Periodically replace the parts.
Electrical box		25,000 hours	♦Check the insulation resistance of the circuit (500 V) ♦Check for loose terminals and connectors.	♦Insulation resistance must be 1 MΩ or above. ♦No loose connections. ♦No accumulated foreign objects. ♦No error display.	♦Clean with a brush if dust accumulation is found. ♦Replace the electrical part if the insulation resistance is 1 MΩ or below. ♦Tighten the loose terminals and reconnect the connectors.
Heat exchanger		5 years	♦Check for clogging, contamination, and damage.	No clogging, contamination, or damage.	Perform cleaning.
Electronic expansion valve		20,000 hours	♦Operation check using operation data.	Temperature must change in proportion to the valve position. (Check the temperature variation with the centralized controller.)	Replace the valve if the operation data show an operation failure due to valve problems.
Sensor (Thermistor, refrigerant sensor, etc)		5 years	♦Check for breakage and deterioration of the cables, and for disconnection of the connectors. ♦Measure the insulation resistance. ♦Check the resistance of parts (Thermistor, refrigerant sensor).	♦No breakage or deterioration of the cables or disconnected connectors. ♦Insulation resistance must be 1 MΩ or above. ♦Please refer to IX Troubleshooting.	Replace the sensor if the cable is broken, short-circuited, or severely deteriorated, or an insulation problem is found.
Drain pan		8 years	♦Check for clogging and drain water flow. ♦Check for coating's peeling or separation.	♦No drain clogging. ♦No abnormal rust or hole.	♦Clean the drain pan and check that the drain pan is tilted properly. ♦Replace the drain pan depending on the repairing coating or conditions.

♦The table above shows the main parts. Check the maintenance contract for details.
♦This maintenance interval is an estimated period until the day when the maintenance should be conducted to use the product safely for a long time.
Make use of the table above for maintenance planning (such as planning budget for parts replacement cost).
♦The inspection intervals depend on the usage and environment.
The inspection intervals do not indicate the warranty period.
♦The maintenance and inspection items may differ depending on maintenance providers.
Please check with your maintenance provider when concluding a maintenance contract.
♦Repairs outside the warranty period will be charged, even if periodic inspections have been performed at the recommended intervals.

MITSUBISHI ELECTRIC TRANE HVAC US LLC

HEAD OFFICE: 1340 SATELLITE BLVD, SUWANEE GA 30024 USA

HWE2504A

New publication effective Jan. 2026
Specifications subject to change without notice