AIR CONDITIONERS

2025

TECHNICAL & SERVICE MANUAL

Model name
<Indoor unit>

TPEFYW004MS1W0A
TPEFYW006MS1W0A
TPEFYW008MS1W0A
TPEFYW012MS1W0A
TPEFYW015MS1W0A
TPEFYW018MS1W0A

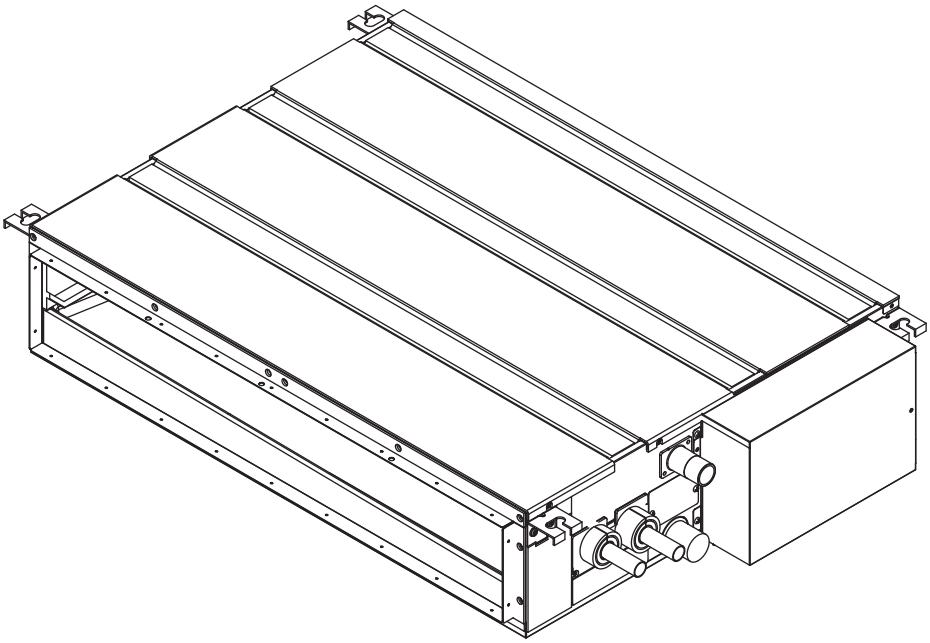

Safety Precautions

Read before installation and performing electrical work

- Thoroughly read the following safety precautions prior to installation.
- Observe these safety precautions for your safety.
- This equipment may have adverse effects on the equipment on the same power supply system.
- Contact the local power authority before connecting to the system.

Symbol explanations

WARNING
This symbol indicates that failure to follow the instructions exactly as stated poses the risk of serious injury or death.

CAUTION
This symbol indicates that failure to follow the instructions exactly as stated poses the risk of serious injury or damage to the unit.

Indicates an action that must be avoided.

Indicates important instructions.

Indicates a parts that requires grounding.

Indicates that caution must be taken with rotating parts. (This symbol is on the main unit label.) <Color: Yellow>

Indicates that the parts that are marked with this symbol pose a risk of electric shock. (This symbol is on the main unit label.) <Color: Yellow>

WARNING
Carefully read the labels affixed to the main unit.

WARNING

Do not use refrigerant other than the type indicated in the manuals provided with the unit and on the nameplate.
Doing so may cause the unit or pipes to burst, or result in explosion or fire during use, during repair, or at the time of disposal of the unit. It may also be in violation of applicable laws. MITSUBISHI ELECTRIC TRANE HVAC US LLC cannot be held responsible for malfunctions or accidents resulting from the use of the wrong type of refrigerant.

Ask your dealer or a qualified technician to install the unit.
Improper installation by the user may result in water leakage, electric shock, or fire.

Properly install the unit on a surface that can withstand its weight.
Unit installed on an unstable surface may fall and cause injury.

Install the indoor unit at least 2.5 m above floor or grade level.

Only use specified cables. Securely connect each cable so that the terminals do not carry the weight of the cable.
Improperly connected cables may produce heat and start a fire.

Take appropriate safety measures against wind gusts and earthquakes to prevent the unit from toppling over.
Improper installation may cause the unit to topple over and cause injury or damage to the unit.

Only use accessories (i.e., air cleaners, humidifiers, electric heaters) recommended by MITSUBISHI ELECTRIC TRANE HVAC US LLC.

Do not make any modifications or alterations to the unit. Consult your dealer for repair.
Improper repair may result in water leakage, electric shock, or fire.

Do not touch the heat exchanger fins with bare hands.
The fins are sharp and pose a risk of cuts.

Properly install the unit according to the instructions in the Installation Manual.
Improper installation may result in water leakage, electric shock, or fire.

Have all electrical work performed by an authorized electrician according to the local regulations and the instructions in this manual. Use a dedicated circuit.
Insufficient power supply capacity or improper installation of the unit may result in malfunctions of the unit, electric shock, or fire.

Disconnect all electric power supplies before accessing of electric parts (inner of control box, fan motor, drain pump etc.)
Touching electric parts result in electric shock.

Keep electrical parts away from water.
Wet electrical parts pose a risk of electric shock, smoke, or fire.

Securely attach the control box cover.
If the cover is not installed properly, dust or water may infiltrate and pose a risk of electric shock, smoke, or fire.

Consult your dealer or a qualified technician when moving or reinstalling the unit.
Improper installation may result in water leakage, electric shock, or fire.

Do not try to defeat the safety features of the unit.
Forced operation of the pressure switch or the temperature switch by defeating the safety features for these devices, or the use of accessories other than the ones that are recommended by MITSUBISHI ELECTRIC TRANE HVAC US LLC may result in smoke, fire, or explosion.

After completing the service work, check for a water leak.

Consult your dealer for proper disposal method.

⚠ CAUTION

Do not use the existing water piping.
Store the piping materials indoors, and keep both ends of the pipes sealed until immediately before installation. Keep the joints wrapped in plastic bags. If dust or dirt enters the water circuit, it may damage the heat exchanger and cause water leakage.

Only use water.
Only use clean water as a refrigerant. The use of water outside the specification may damage the refrigerant circuit.

Install the unit so that external force is not applied to the water pipes.

CONTENTS

I Features
[1] Features 1

II Components and Functions
[1] Components and Functions 2

III Specifications
[1] Specifications 5
1.Specifications 5
2.Electrical component specifications 7

IV Outlines and Dimensions
[1] Outlines and Dimensions 8

V Wiring Diagram
[1] Wiring Diagram 10

VI Water System Diagram
[1] Water System Diagram 11

VII Microprocessor Control
[1] Microprocessor Control 12
1.Cool operation 12
2.Drying operation 14
3.Fan operation 15
4.Heat operation 16
5.Auto operation [Automatic Cool / Heat change over operation] 17
6.When unit is stopped control mode 18
7.Heater control 18

VIII Troubleshooting
[1] Troubleshooting 26
1.Check methods 26
2.DC fan motor (fan motor/indoor control board) 28
3.Address switch setting 29
4.Voltage test points on the control board 30
5.Dipswitch setting (Factory setting) 31

IX Disassembly Procedure
[1] Disassembly Procedure 34
1.Control box 34
2.Thermistor (Intake air) 34
3.Drain pan 35
4.Drain pump 36
5.Thermistor (Water inlet/outlet piping temperature detection) 36
6.Fan and fan motor 37
7.Heat exchanger 38

X Inspection and maintenance
[1] Inspection and maintenance 39
1.Guideline for preventive maintenance 39
2.Recommended parts inspection interval 40

[1] Features

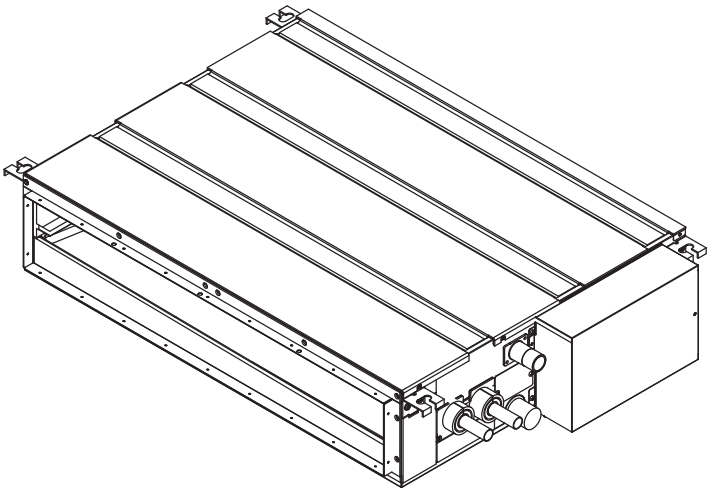

Model	Cooling capacity/Heating capacity	
	BTU/h	kW
TPEFYW004MS1W0A	4000/4500	1.1/1.3
TPEFYW006MS1W0A	6000/6700	1.8/2.0
TPEFYW008MS1W0A	8000/9000	2.3/2.6
TPEFYW012MS1W0A	12000/13500	3.5/4.0
TPEFYW015MS1W0A	15000/17000	4.4/5.0
TPEFYW018MS1W0A	18000/20000	5.3/5.9

[1] Components and Functions

1. Indoor (Main) Unit

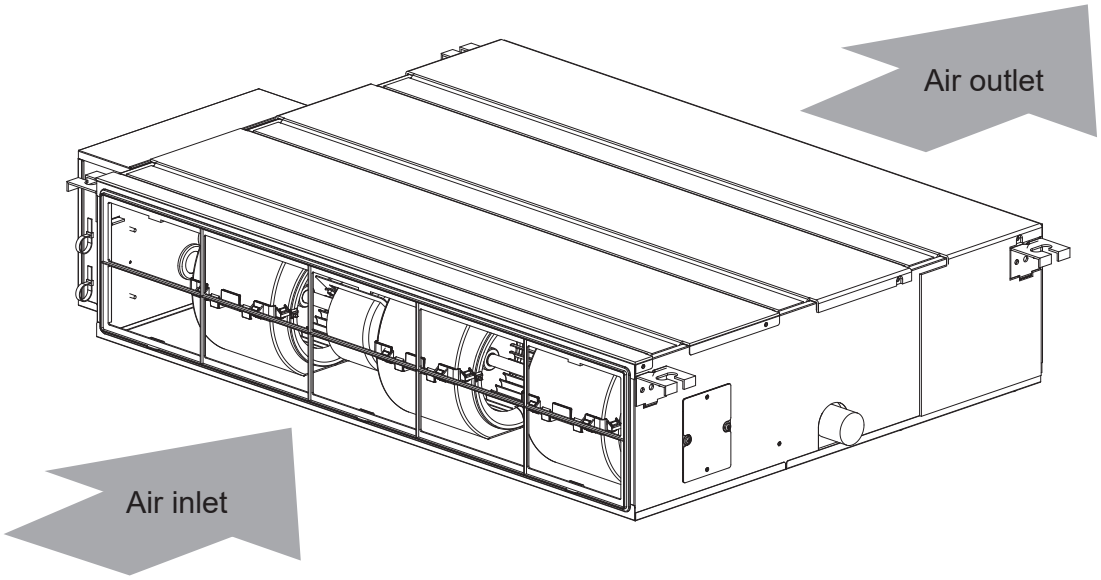

2. Remote Controller
[TAR-42MAAUB]
Once the operation mode is selected, the unit will remain in the selected mode until changed.

(1) Remote Controller Interface

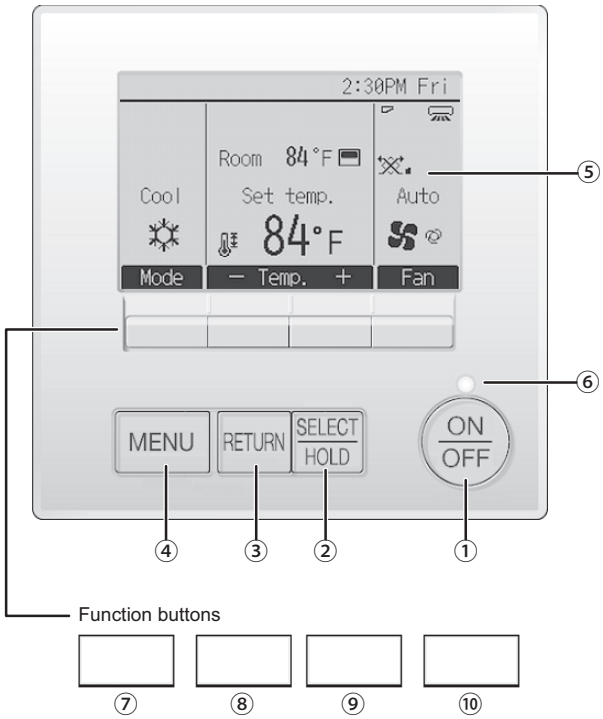

① [ON/OFF] button

Press to turn ON/OFF the indoor unit.

② [SELECT/HOLD] button

Press to save the setting.
When the Main menu is displayed, pressing this button will enable/disable the HOLD function.

③ [RETURN] button

Press to return to the previous screen.

④ [MENU] button

Press to bring up the Main menu.

⑤ Backlit LCD

Operation settings will appear.
When the backlight is off, pressing any button turns the backlight on and it will stay lit for a certain period of time depending on the screen.

When the backlight is off, pressing any button turns the backlight on and does not perform its function. (except for the [ON/OFF] button)

⑥ ON/OFF lamp

This lamp lights up in green while the unit is in operation. It blinks while the remote controller is starting up or when there is an error.

The functions of the function buttons change depending on the screen. Refer to the button function guide that appears at the bottom of the LCD for the functions they serve on a given screen.
When the system is centrally controlled, the button function guide that corresponds to the locked button will not appear.

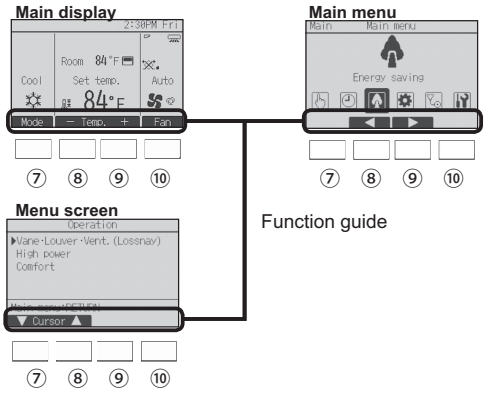

⑦ Function button [F1]

Main display: Press to change the operation mode.
Menu screen: The button function varies with the screen.

⑧ Function button [F2]

Main display: Press to decrease temperature.
Main menu: Press to move the cursor left.
Menu screen: The button function varies with the screen.

⑨ Function button [F3]

Main display: Press to increase temperature.
Main menu: Press to move the cursor right.
Menu screen: The button function varies with the screen.

⑩ Function button [F4]

Main display: Press to change the fan speed.
Menu screen: The button function varies with the screen.

(2) Remote Controller Display

The main display can be displayed in two different modes: “Full” and “Basic.” The factory setting is “Full.” To switch to the “Basic” mode, change the setting on the Main display setting.

Full mode

* All icons are displayed for explanation.

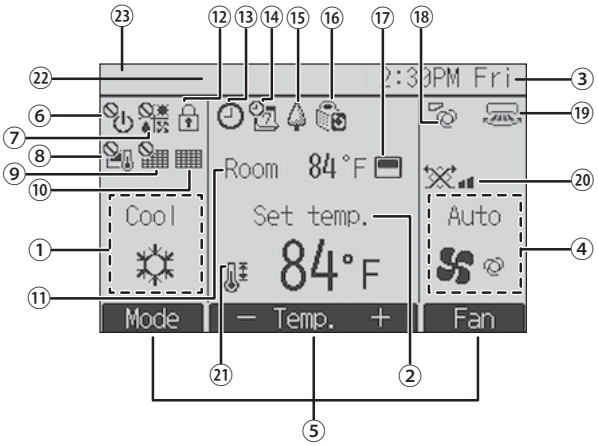

Basic mode

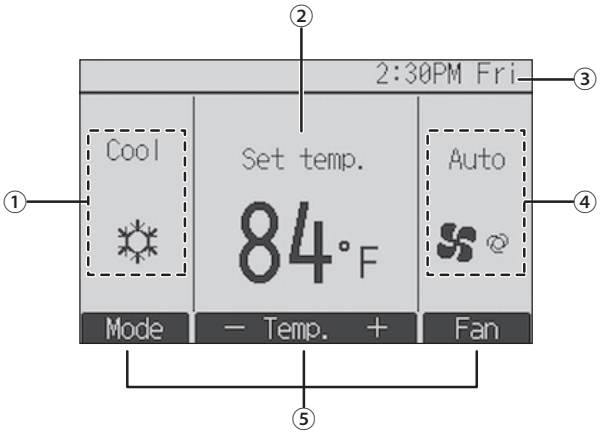

① Operation mode

Indoor unit operation mode appears here.

② Set temperature

Set temperature appears here.

③ Clock

Current time appears here.

④ Fan speed

Fan speed setting appears here.

⑤ Button function guide

Functions of the corresponding buttons appear here.

⑥

Appears when the ON/OFF operation is centrally controlled.

⑦

Appears when the operation mode is centrally controlled.

⑧

Appears when the set temperature is centrally controlled.

⑨

Appears when the filter reset function is centrally controlled.

⑩

Indicates when filter needs maintenance.

⑪ Room temperature

Current room temperature appears here.

⑫

Appears when the buttons are locked.

⑬

Appears when the On/Off timer or Auto-off timer function is enabled.

appears when the timer is disabled by the centralized control system.

appears when the HOLD function is enabled.

⑭

Appears when the Weekly timer is enabled.

⑮

Appears while the units are operated in the energy-save mode. (Will not appear on some models of indoor units)

⑯

Appears while the outdoor units are operated in the silent mode.

⑰

Appears when the built-in thermistor on the remote controller is activated to monitor the room temperature (⑪).

appears when the thermistor on the indoor unit is activated to monitor the room temperature.

⑱

Indicates the vane setting.

⑲

Indicates the louver setting.

⑳

Indicates the ventilation setting.

㉑

Appears when the set temperature range is restricted.

㉒ Centrally controlled

Appears for a certain period of time when a centrally-controlled item is operated.

㉓ Error display

An error code appears during the error.

* When an error code is displayed on the main display, an error is occurring but the indoor unit can keep its operation. If an error occurs, note the error code and consult your dealer.

Most settings (except ON/OFF, mode, fan speed, temperature) can be made from the Main menu.

[1] Specifications

1. Specifications

Model				TPEFYW004MS1W0A	TPEFYW006MS1W0A	TPEFYW008MS1W0A	TPEFYW012MS1W0A
Power source				1-phase 208/230 V 60 Hz	1-phase 208/230 V 60 Hz	1-phase 208/230 V 60 Hz	1-phase 208/230 V 60 Hz
Cooling capacity	*1		BTU/h	4,000	6,000	8,000	12,000
	*1		kW	1.1	1.8	2.3	3.5
	*2	Power input	kW	0.024	0.032	0.044	0.064
	*2	Current input	A	0.31/0.28	0.37/0.36	0.49/0.44	0.67/0.63
Heating capacity	*3		BTU/h	4,500	6,700	9,000	13,500
	*3		kW	1.3	2.0	2.6	4.0
	*2	Power input	kW	0.022	0.030	0.042	0.062
	*2	Current input	A	0.26/0.23	0.32/0.31	0.44/0.39	0.62/0.58
External finish				Galvanized steel plate	Galvanized steel plate	Galvanized steel plate	Galvanized steel plate
External dimension H × W × D			inch	7-7/8 x 31-1/8 x 27-9/16	7-7/8 x 31-1/8 x 27-9/16	7-7/8 x 31-1/8 x 27-9/16	7-7/8 x 31-1/8 x 27-9/16
			mm	200 x 790 x 700	200 x 790 x 700	200 x 790 x 700	200 x 790 x 700
Net weight			lbs (kg)	41 (18.5)	41 (18.5)	42 (19)	43 (19.5)
Heat exchanger				Cross fin (Aluminum fin and copper tube)	Cross fin (Aluminum fin and copper tube)	Cross fin (Aluminum fin and copper tube)	Cross fin (Aluminum fin and copper tube)
		Water Volume	L	0.5	0.5	0.7	0.9
FAN		Type × Quantity		Sirocco fan x 2	Sirocco fan x 2	Sirocco fan x 2	Sirocco fan x 2
	*4	External	in.WG	<0.02> - 0.06 - <0.14> - <0.20>	<0.02> - 0.06 - <0.14> - <0.20>	<0.02> - 0.06 - <0.14> - <0.20>	<0.02> - 0.06 - <0.14> - <0.20>
		static press.	Pa	<5> - 15 - <35> - <50>	<5> - 15 - <35> - <50>	<5> - 15 - <35> - <50>	<5> - 15 - <35> - <50>
		Motor Type		DC motor	DC motor	DC motor	DC motor
		Motor output	kW	0.096	0.096	0.096	0.096
		Driving mechanism		Direct-driven by motor	Direct-driven by motor	Direct-driven by motor	Direct-driven by motor
		Air flow rate		(Low-Mid-High)	(Low-Mid-High)	(Low-Mid-High)	(Low-Mid-High)
			cfm	141 - 159 - 177	177 - 212 - 247	194 - 247 - 318	212 - 282 - 371
			m^3/min	4.0 - 4.5 - 5.0	5.0 - 6.0 - 7.0	5.5 - 7.0 - 9.0	6.0 - 8.0 - 10.5
			L/s	67 - 75 - 83	83 - 100 - 117	92 - 117 - 150	100 - 133 - 175
Sound pressure level (measured in anechoic room)				(Low-Mid-High)	(Low-Mid-High)	(Low-Mid-High)	(Low-Mid-High)
	*2		dB <A>	22-23-25	22-24-28	23-26-30	23-28-34
Insulation material				Polystyrene foam, Polyethylene foam, Urethane foam	Polystyrene foam, Polyethylene foam, Urethane foam	Polystyrene foam, Polyethylene foam, Urethane foam	Polystyrene foam, Polyethylene foam, Urethane foam
Air filter				PP honeycomb fabric.	PP honeycomb fabric.	PP honeycomb fabric.	PP honeycomb fabric.
Protection device				Fuse	Fuse	Fuse	Fuse
Refrigerant control device				-	-	-	-
Connectable HBC controller				CMB-WP-NU-AA, CMB-WP-NU-AB	CMB-WP-NU-AA, CMB-WP-NU-AB	CMB-WP-NU-AA, CMB-WP-NU-AB	CMB-WP-NU-AA, CMB-WP-NU-AB
Water piping diameter	*5, 6						
		Connection size	Inlet	mm O.D.	22	22	22	22
			Outlet	mm O.D.	22	22	22	22
		Field pipe size	Inlet	mm I.D.	20	20	20	20
			Outlet	mm I.D.	20	20	20	20
Field drain pipe size				inch (mm)	O.D.1-1/4 (32)	O.D.1-1/4 (32)	O.D.1-1/4 (32)	O.D.1-1/4 (32)
Drawing		External			-	-	-	-
		Wiring			-	-	-	-
		Refrigerant cycle			-	-	-	-
Standard attachment		Document			Installation Manual, Instruction Book	Installation Manual, Instruction Book	Installation Manual, Instruction Book	Installation Manual, Instruction Book
		Accessory			Washer, Drain socket, Tie band	Washer, Drain socket, Tie band	Washer, Drain socket, Tie band	Washer, Drain socket, Tie band
Optional parts		External heater adapter			PAC-YU25HT	PAC-YU25HT	PAC-YU25HT	PAC-YU25HT
Remarks					* Details on foundation work, duct work, insulation work, electrical wiring, power source switch, and other items shall be referred to the Installation Manual. * Due to continuing improvement, above specifications may be subject to change without notice.			

Notes:

1. Nominal cooling conditions
   Indoor: 80°FD.B./67°FW.B. (26.7°CD.B./19.4°CW.B.), Outdoor: 95°FD.B. (35°CD.B.)
   Pipe length: 25 ft. (7.6 m), Level difference: 0 ft. (0 m)
2. The values are measured at the factory setting of external static pressure.
3. Nominal heating conditions
   Indoor: 70°FD.B. (21.1°CD.B.), Outdoor: 47°FD.B./43°FW.B. (8.3°CD.B./6.1°CW.B.)
   Pipe length: 25 ft. (7.6 m), Level difference: 0 ft. (0 m)
4. The factory setting of external static pressure is shown without < >.
   Refer to "Fan characteristics curves", according to the external static pressure, in DATA BOOK for the usable range of air flow rate.
5. Be sure to install a valve on the water inlet/outlet.
6. Install a strainer (40 mesh or more) on the pipe next to the valve to remove the foreign matters.

Unit converter	
BTU/h	=kW x 3,412
cfm	=m^3/min x 35.31
lbs	=kg/0.4536

*Above specification data is subject to rounding variation.

Model				TPEFYW015MS1W0A	TPEFYW018MS1W0A		
Power source				1-phase 208/230 V 60 Hz	1-phase 208/230 V 60 Hz		
Cooling capacity		*1	BTU/h	15,000	18,000		
		*1	kW	4.4	5.3		
	*2	Power input	kW	0.056	0.082		
	*2	Current input	A	0.62/0.57	0.75/0.71		
Heating capacity		*3	BTU/h	17,000	20,000		
		*3	kW	5.0	5.9		
	*2	Power input	kW	0.054	0.080		
	*2	Current input	A	0.57/0.52	0.70/0.66		
External finish				Galvanized steel plate	Galvanized steel plate		
External dimension H × W × D			inch	7-7/8 x 39 x 27-9/16	7-7/8 x 39 x 27-9/16		
			mm	200 x 990 x 700	200 x 990 x 700		
Net weight			lbs (kg)	51 (23)	51 (23)		
Heat exchanger				Cross fin (Aluminum fin and copper tube)	Cross fin (Aluminum fin and copper tube)		
		Water Volume	L	1.2	1.2		
FAN		Type × Quantity		Sirocco fan x 3	Sirocco fan x 3		
	*4	External	in.WG	<0.02> - 0.06 - <0.14> - <0.20>	<0.02> - 0.06 - <0.14> - <0.20>		
		static press.	Pa	<5> - 15 - <35> - <50>	<5> - 15 - <35> - <50>		
		Motor Type		DC motor	DC motor		
		Motor output	kW	0.096	0.096		
		Driving mechanism		Direct-driven by motor	Direct-driven by motor		
		Air flow rate		(Low-Mid-High)	(Low-Mid-High)		
			cfm	282 - 353 - 424	353 - 441 - 530		
			m^3/min	8.0 - 10.0 - 12.0	10.0 - 12.5 - 15.0		
			L/s	133 - 167 - 200	167 - 208 - 250		
Sound pressure level (measured in anechoic room)				(Low-Mid-High)	(Low-Mid-High)		
		*2	dB <A>	29-31-34	30-34-37		
Insulation material				Polystyrene foam, Polyethylene foam, Urethane foam	Polystyrene foam, Polyethylene foam, Urethane foam		
Air filter				PP honeycomb fabric.	PP honeycomb fabric.		
Protection device				Fuse	Fuse		
Refrigerant control device				-	-		
Connectable HBC controller				CMB-WP-NU-AA, CMB-WP-NU-AB	CMB-WP-NU-AA, CMB-WP-NU-AB		
Water piping diameter		*5, 6					
	Connection size	Inlet	mm O.D.	22	22		
		Outlet	mm O.D.	22	22		
	Field pipe size	Inlet	mm I.D.	20	20		
		Outlet	mm I.D.	20	20		
Field drain pipe size			inch (mm)	O.D.1-1/4 (32)	O.D.1-1/4 (32)		
Drawing		External		-	-		
		Wiring		-	-		
		Refrigerant cycle		-	-		
Standard attachment		Document		Installation Manual, Instruction Book	Installation Manual, Instruction Book		
		Accessory		Washer, Drain socket, Tie band	Washer, Drain socket, Tie band		
Optional parts		External heater adapter		PAC-YU25HT	PAC-YU25HT		
Remarks				* Details on foundation work, duct work, insulation work, electrical wiring, power source switch, and other items shall be referred to the Installation Manual. * Due to continuing improvement, above specifications may be subject to change without notice.			

Notes:

1. Nominal cooling conditions
   Indoor: 80°FD.B./67°FW.B. (26.7°CD.B./19.4°CW.B.), Outdoor: 95°FD.B. (35°CD.B.)
   Pipe length: 25 ft. (7.6 m), Level difference: 0 ft. (0 m)
2. The values are measured at the factory setting of external static pressure.
3. Nominal heating conditions
   Indoor: 70°FD.B. (21.1°CD.B.), Outdoor: 47°FD.B./43°FW.B. (8.3°CD.B./6.1°CW.B.)
   Pipe length: 25 ft. (7.6 m), Level difference: 0 ft. (0 m)
4. The factory setting of external static pressure is shown without < >.
   Refer to "Fan characteristics curves", according to the external static pressure, in DATA BOOK for the usable range of air flow rate.
5. Be sure to install a valve on the water inlet/outlet.
6. Install a strainer (40 mesh or more) on the pipe next to the valve to remove the foreign matters.

Unit converter	
BTU/h	=kW x 3,412
cfm	=m^3/min x 35.31
lbs	=kg/0.4536

*Above specification data is subject to rounding variation.

2. Electrical component specifications

Component	Sym-bol	TPEFYW004MS1W0A	TPEFYW006MS1W0A	TPEFYW008MS1W0A	TPEFYW012MS1W0A
Room temperature thermistor	TH21	Resistance 0°C[32°F]/15kΩ, 10°C[50°F]/9.6kΩ, 20°C[68°F]/6.3kΩ, 25°C[77°F]/5.4kΩ, 30°C[86°F]/4.3kΩ, 40°C[104°F]/3.0kΩ			
Water inlet thermistor	TH22	Resistance 0°C[32°F]/15kΩ, 10°C[50°F]/9.6kΩ, 20°C[68°F]/6.3kΩ, 25°C[77°F]/5.4kΩ, 30°C[86°F]/4.3kΩ, 40°C[104°F]/3.0kΩ			
Water outlet thermistor	TH23	Resistance 0°C[32°F]/15kΩ, 10°C[50°F]/9.6kΩ, 20°C[68°F]/6.3kΩ, 25°C[77°F]/5.4kΩ, 30°C[86°F]/4.3kΩ, 40°C[104°F]/3.0kΩ			
Fuse	F1	250 VAC 3.15A			
	F2	400 VDC 1A			
Fan motor	MF	8-pole, Output 96W SIC-70CW-D8114-1			
Power supply terminal block	TB2	(L1, L2) 250V 20A			
Transmission terminal block	TB5 TB15	(1, 2), (M1, M2, S) 250V 20A			
Drain float switch	FS	Open/short detection Initial contact resistance 500mΩ or less			
Drain pump	DP	PMD, INPUT 3.9W (13VDC), 600cm^3/min			

Component	Sym-bol	TPEFYW015MS1W0A	TPEFYW018MS1W0A
Room temperature thermistor	TH21	Resistance 0°C[32°F]/15kΩ, 10°C[50°F]/9.6kΩ, 20°C[68°F]/6.3kΩ, 25°C[77°F]/5.4kΩ, 30°C[86°F]/4.3kΩ, 40°C[104°F]/3.0kΩ	
Liquid pipe thermistor	TH22	Resistance 0°C[32°F]/15kΩ, 10°C[50°F]/9.6kΩ, 20°C[68°F]/6.3kΩ, 25°C[77°F]/5.4kΩ, 30°C[86°F]/4.3kΩ, 40°C[104°F]/3.0kΩ	
Gas pipe thermistor	TH23	Resistance 0°C[32°F]/15kΩ, 10°C[50°F]/9.6kΩ, 20°C[68°F]/6.3kΩ, 25°C[77°F]/5.4kΩ, 30°C[86°F]/4.3kΩ, 40°C[104°F]/3.0kΩ	
Fuse	F1	250 VAC 3.15A	
	F2	400 VDC 1A	
Fan motor	MF	8-pole, Output 96W SIC-70CW-D896-2	
Power supply terminal block	TB2	(L1, L2) 250V 30A	
Transmission terminal block	TB5 TB15	(1, 2), (M1, M2, S) 250V 20A	
Drain float switch	FS	Open/short detection Initial contact resistance 500mΩ or less	
Drain pump	DP	PMD, INPUT 3.9W (13VDC), 600cm^3/min	

[1] Outlines and Dimensions

TPEFYW004, 006, 008, 012, 015, 018MS1W0A

Unit: mm (in.)

Model	A	B	C	D	E	F	G	H	J	K	L	M	①Water pipe from HBC	②Water pipe to HBC
TPEFYW004MS1W0A	700 (27-9/16)	752 (29-5/8)	798 (31-7/16)	660 (26)	7	600 (23-5/8)	660 (26)	5	500 (19-11/16)	16	839 (33-1/16)	790 (31-1/8)	O.D.ø22	
TPEFYW006MS1W0A														
TPEFYW008MS1W0A														
TPEFYW012MS1W0A														
TPEFYW015MS1W0A	900 (35-7/16)	952 (37-1/2)	998 (39-5/16)	860 (33-7/8)	9	800 (31-1/2)	860 (33-7/8)	7	700 (27-9/16)	20	1039 (40-29/32)	990 (39)		
TPEFYW018MS1W0A														

Unit:mm(in.)

Note 1.Use M10 screw for the suspension bolt (field supply).
2.This drawing is for TPEFYW015, 018MS1W0A models, which have 3 fans.
TPEFYW004, 006, 008, 012MS1W0A models have 2 fans.
3.In case of the inlet duct is used, remove the air filter (supply with the unit), then install the filter (field supply) at suction side.

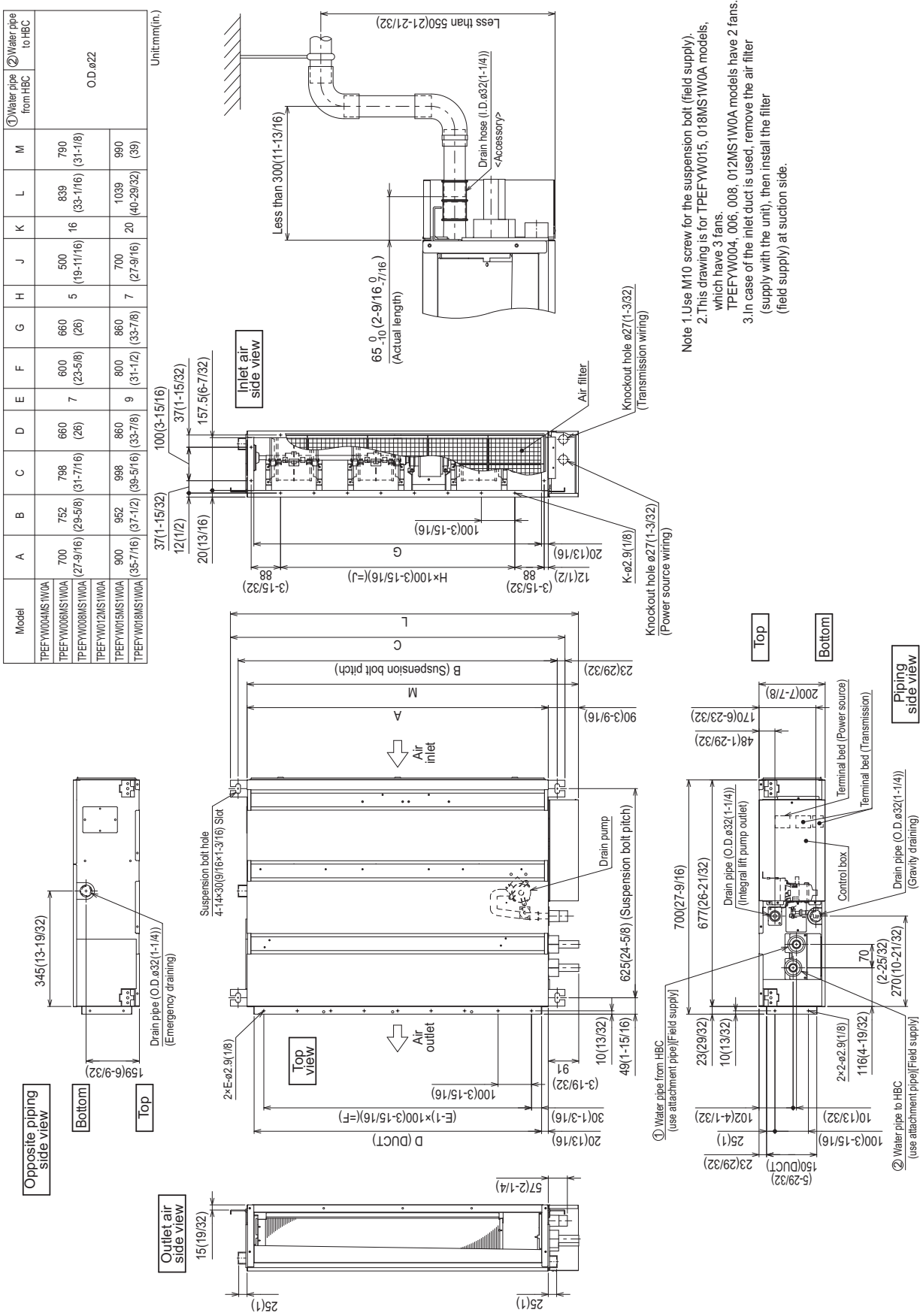

TPEFYW004, 006, 008, 012, 015, 018MS1W0A

Unit: mm (in.)

Model	N	P	Q	R
TPEFYW004MS1W0A	700 (27-9/16)	50~150 (1-31/32~5-29/32)	800 (31-1/2)	1300 (51-3/16)
TPEFYW006MS1W0A				
TPEFYW008MS1W0A				
TPEFYW012MS1W0A				
TPEFYW015MS1W0A	900 (35-7/16)	150~250 (5-29/32~9-27/32)	1000 (39-3/8)	1500 (59-1/16)
TPEFYW018MS1W0A				

Unit:mm(in.)

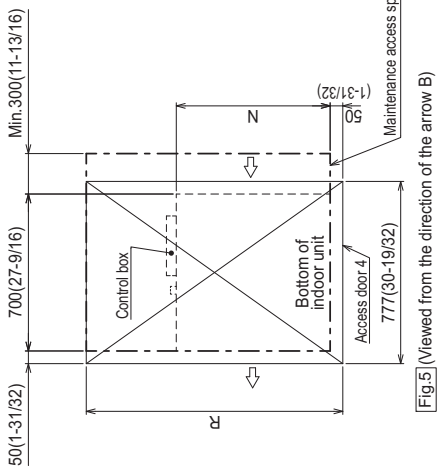

Fig.5 (Viewed from the direction of the arrow B)

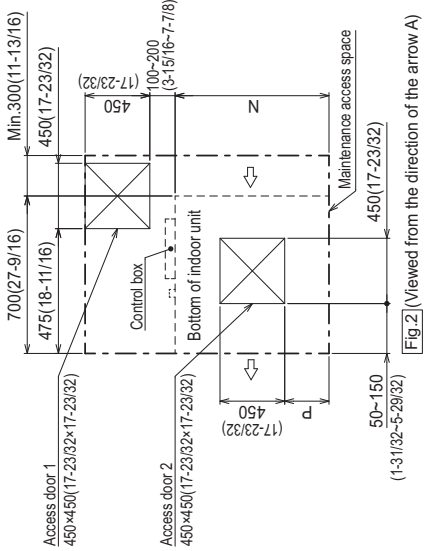

Fig.2 (Viewed from the direction of the arrow A)

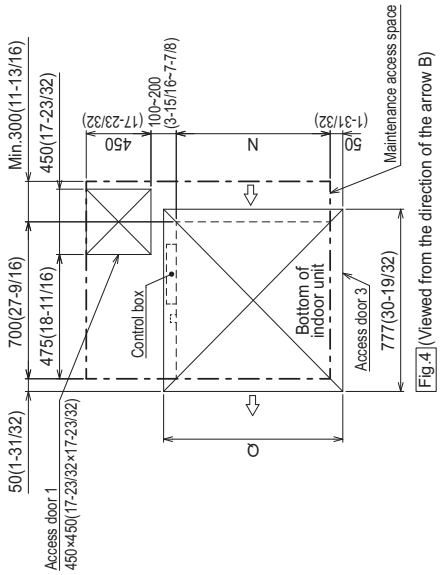

Fig.4 (Viewed from the direction of the arrow B)

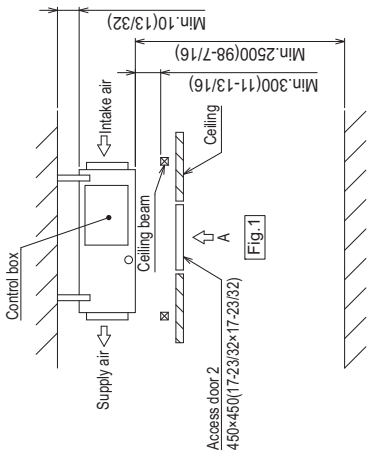

Fig.1

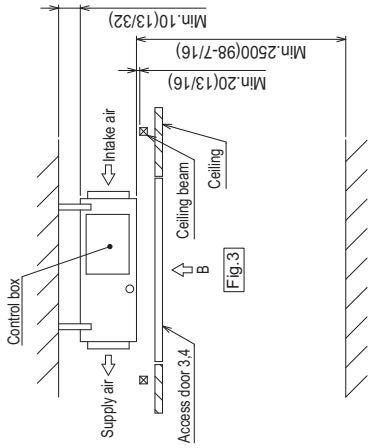

Fig.3

[Maintenance access space]
Secure enough access space to allow for the maintenance, inspection, and replacement of the motor, fan, drain pump, heat exchanger, and control box in one of the following ways.
Select an installation site for the indoor unit so that its maintenance access space will not be obstructed by beams or other objects.

(1) When a space of 300mm(11-13/16) or more is available below the unit between the unit and the ceiling. (Fig.1)
· Create access door 1 and 2 (450×450mm(17-23/32×17-23/32) each) as shown in Fig.2.
(Access door 2 is not required if enough space is available below the unit for a maintenance worker to work in.)

(2) When a space of less than 300mm(11-13/16) is available below the unit between the unit and the ceiling.
(At least 20mm(13/16) of space should be left below the unit as shown in Fig.3.)
· Create access door 1 diagonally below the control box and access door 3 below the unit as shown in Fig.4.
or
· Create access door 4 below the control box and the unit as shown in Fig.5.

[1] Wiring Diagram

TPEFYW004, 006, 008, 012, 015, 018MS1W0A

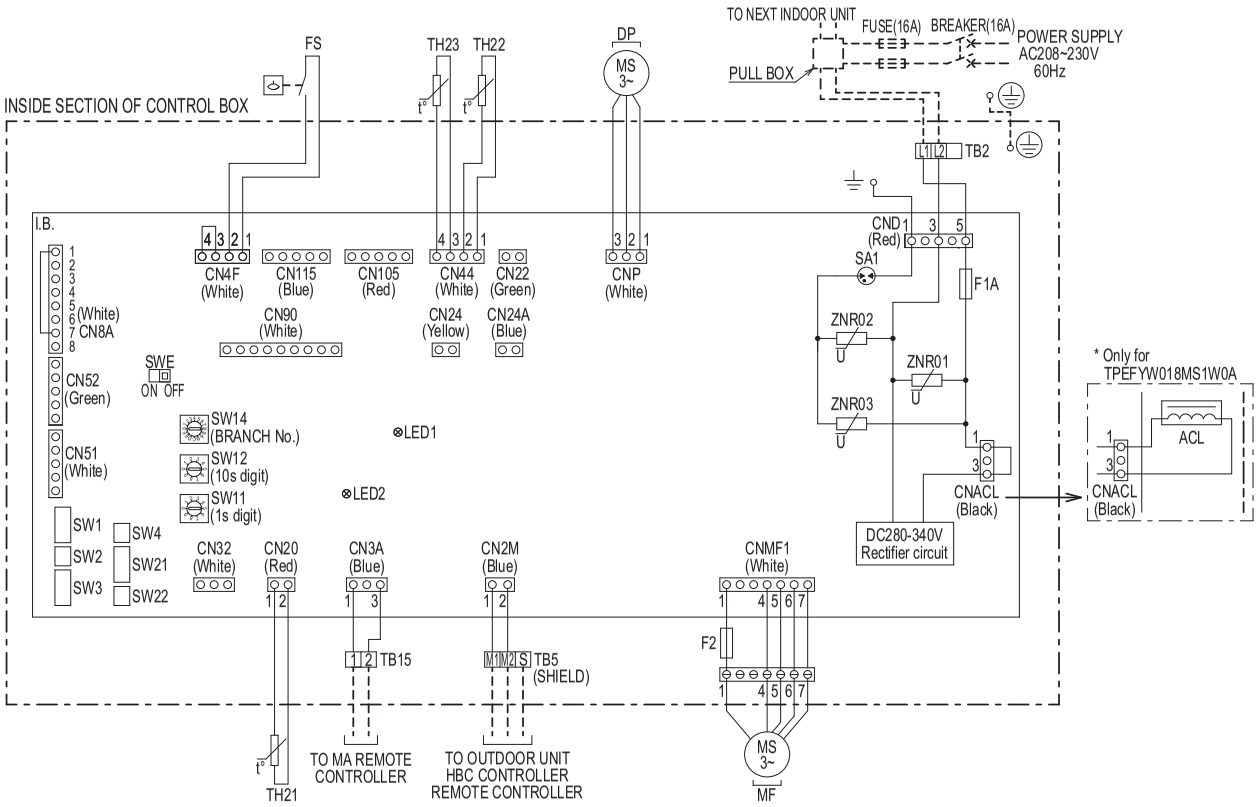

SYMBOL EXPLANATION

SYMBOL	NAME
ACL	AC reactor (Power factor improvement)
DP	Drain Pump
FS	Float switch
F2	Fuse DC400 1A
MF	Fan Motor
TB2	Power source terminal block
TB5	Transmission terminal block
TB15	Transmission terminal block
TH21	Thermistor (inlet air temp. detection)
TH22	Thermistor (piping temp.detection/inlet water)
TH23	Thermistor (piping temp.detection/outlet water)
I.B.	Indoor controller board
SA1	Arrester
F1A	Fuse AC250V 3.15A
ZNR01	Varistor
ZNR02	Varistor
ZNR03	Varistor
CN24	Connector (Heater control 1st)
CN24A	Connector (Heater control 2nd)
CN22	Connector (Fan control)
CN32	Connector (Remote switch)
CN51	Connector (Centrally control)
CN52	Connector (Remote indication)
CN90	Connector (Wireless)
CN105	Connector (IT terminal)
CN115	Connector (IT terminal)
SW1	Switch (for mode selection)
SW2	Switch (for capacity code)
SW3	Switch (for mode selection)
SW4	Switch (for model selection)
SW11	Switch (1s digit address set)
SW12	Switch (10s digit address set)
SW14	Switch (BRANCH No.)
SW21	Switch (for mode selection)
SW22	Switch (Wireless pair No.)
SWE	Connector (emergency operation)
LED1	LED (Power supply)
LED2	LED (Remote controller supply)

NOTE)1.Symbols used in wiring diagram are
:Connector, :Terminal, ⊖ :Relay connector,
------ (Heavy dotted line):Field wiring.

2.Have all electric work done by a licensed electrician according to the local regulations.

3.Earth leakage circuit breaker should be set up on the wiring of the power supply.

4.To perform a drainage test for the drain pump turn on the SWE on the control board while the indoor unit is being powered.
* Be sure to turn off the SWE after completing a drainage test or test run.

5.Use copper supply wire.

DIP SWITCH SETTING

MODEL	SW1	SW2	SW3	SW4	SW21	SW22	SWE
TPEFYW004MS1W0A	ON 1 2 3 4 5 6 7 8 9 10	ON 1 2 3 4 5 6	ON 1 2 3 4 5 6 7 8 9 10	ON 1 2 3 4 5 6	ON 1 2 3 4 5 6 7 8	ON 1 2 3 4	ON OFF
TPEFYW006MS1W0A	ON 1 2 3 4 5 6 7 8 9 10	ON 1 2 3 4 5 6	ON 1 2 3 4 5 6 7 8 9 10	ON 1 2 3 4 5 6	ON 1 2 3 4 5 6 7 8	ON 1 2 3 4	ON OFF
TPEFYW008MS1W0A	ON 1 2 3 4 5 6 7 8 9 10	ON 1 2 3 4 5 6	ON 1 2 3 4 5 6 7 8 9 10	ON 1 2 3 4 5 6	ON 1 2 3 4 5 6 7 8	ON 1 2 3 4	ON OFF
TPEFYW012MS1W0A	ON 1 2 3 4 5 6 7 8 9 10	ON 1 2 3 4 5 6	ON 1 2 3 4 5 6 7 8 9 10	ON 1 2 3 4 5 6	ON 1 2 3 4 5 6 7 8	ON 1 2 3 4	ON OFF
TPEFYW015MS1W0A	ON 1 2 3 4 5 6 7 8 9 10	ON 1 2 3 4 5 6	ON 1 2 3 4 5 6 7 8 9 10	ON 1 2 3 4 5 6	ON 1 2 3 4 5 6 7 8	ON 1 2 3 4	ON OFF
TPEFYW018MS1W0A	ON 1 2 3 4 5 6 7 8 9 10	ON 1 2 3 4 5 6	ON 1 2 3 4 5 6 7 8 9 10	ON 1 2 3 4 5 6	ON 1 2 3 4 5 6 7 8	ON 1 2 3 4	ON OFF

ON 1 2 DIP SWITCH DEFINITION
S1:ON
S2:OFF

[1] Water System Diagram

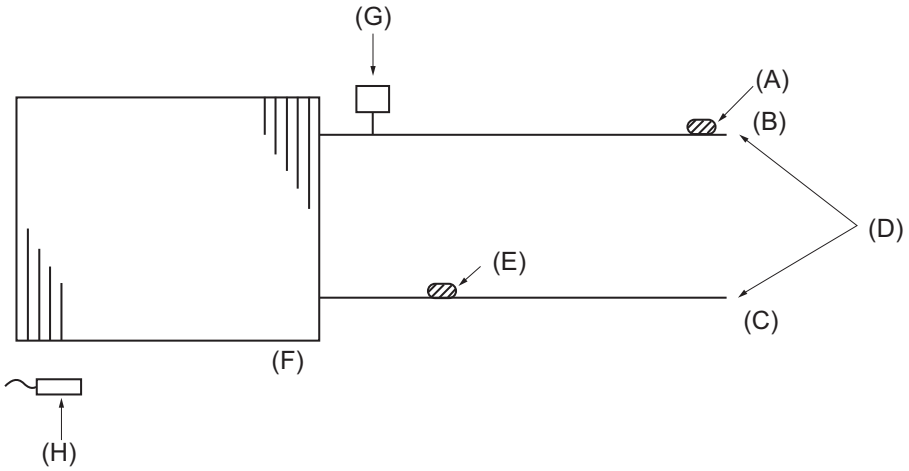

(A) Water outlet thermistor TH23

(B) Water outlet

(C) Water inlet

(D) Connections

(E) Water inlet thermistor TH22

(F) Heat exchanger

(G) Manual air purge valve

(H) Room temperature thermistor TH21

				TPEFYW004, 006, 008, 012, 015, 018MS1W0A
Water piping diameter	Connection size	Inlet	mm O.D.	22
		Outlet	mm O.D.	22
	Field pipe size	Inlet	mm I.D.	20
		Outlet	mm I.D.	20

[1] Microprocessor Control

1. Cool operation

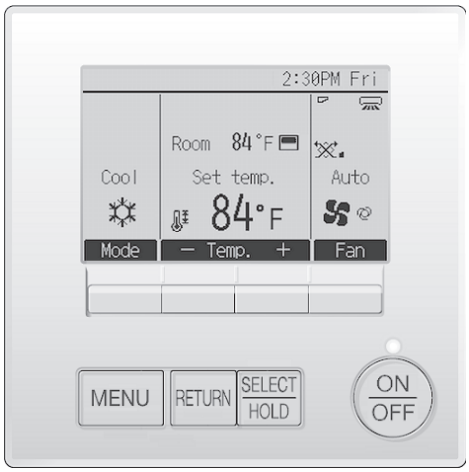

<How to operate>

1. Press POWER [ON/OFF] button.
2. Press the [F1] button to display Cool.
3. Press the [F2] or [F3] button to set the desired temperature.

Note

The set temperature changes 2°F when the [F2] or [F3] button is pressed one time. Cooling 67 to 87°F

1. Thermoregulating function

(1) Thermoregulating function (Function to prevent restarting for 3 minutes)

- Room temperature ≥ desired temperature + 2°F ⋯Thermo ON
- Room temperature ≤ desired temperature ⋯Thermo OFF

(2) Anti-freezing control (Frost Prevention control of indoor unit)

- Detected condition:

When BOTH conditions 1 and 2 have been met, the anti-freeze control initiates, and the unit enters to the Thermo-OFF*.

1) Indoor unit has been Thermo ON* in Cool/Dry mode for at least 16 min.
2) When the water inlet temp (TH22) or water outlet temp (TH23) is 33.8°F or less, continuously for 3 min.

- Released condition:

Anti-freezing control is cancelled when ANY one of the following conditions is satisfied, and an additional 3 minutes have passed.

1) Water inlet temp (TH22) and water outlet temp (TH23) are 50°F or above continuously for 1 min.
2) The condition of the Thermo OFF* has become complete by thermal-regulating (unit satisfies by set point).
3) The operation mode becomes a mode other than COOL or Dry.
4) The operation is stopped (unit is turned off).
5) Three min have passed from start of anti-freezing control.

*Thermo OFF = The IC coil is not actively cooling or heating.
*Thermo ON = The IC coil is actively cooling or heating.

Example:

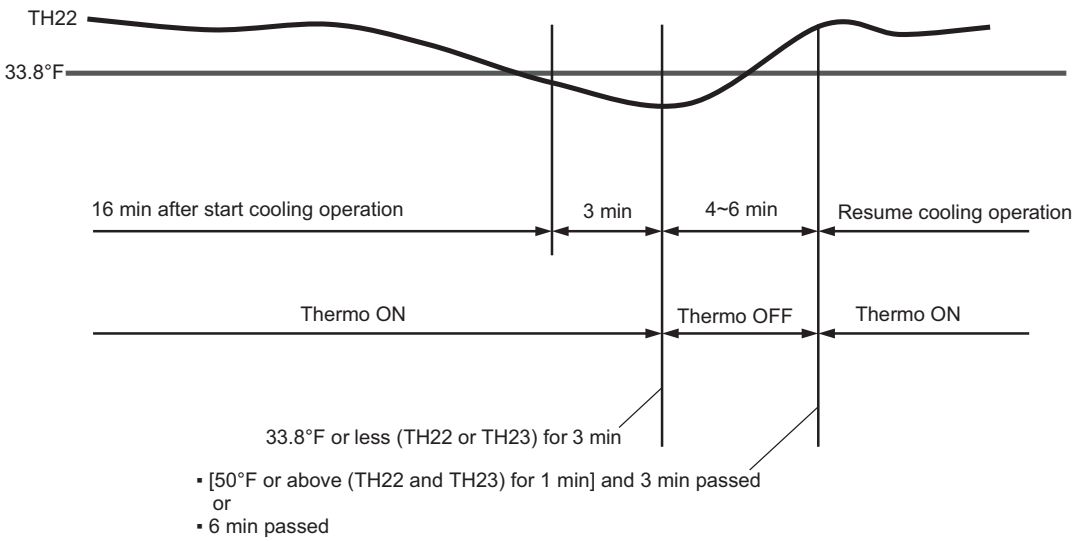

2. Fan

(1) By the remote controller setting (switch of 3 speeds+Auto)

Type	Fan speed notch
3 speeds + Auto type	[Low], [Mid], [High], [Auto]

- When [Auto] is set, fan speed is changed depending on the value of: Room temperature - Desired temperature

3. Drain pump

(1) Drain pump control

- Always drain pump ON during the Cool and Drying mode operation. (Regardless of the thermo ON/ OFF)
- When the operation mode has changed from the Cool or Drying to the others (including Stop), OFF the control after the drain pump ON for 3 minutes.

(2) Float switch control

- Float switch control judges whether the sensor is in the air or in the water by turning the float switch ON/OFF.

In the water : Detected that the float switch is ON for 15 seconds.
In the air : Detected that the float switch is OFF for 15 seconds.

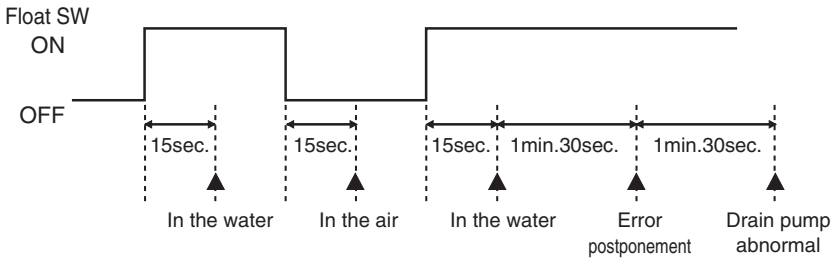

2. Drying operation

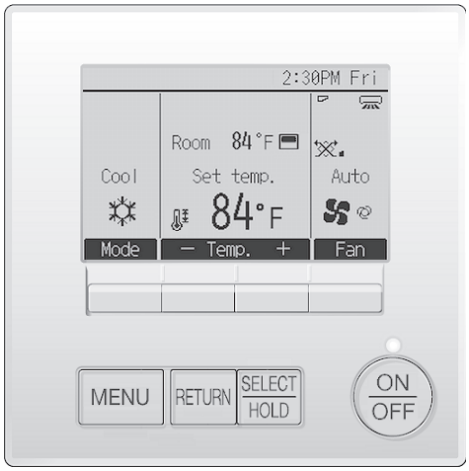

<How to operate>

1. Press POWER [ON/OFF] button.
2. Press the [F1] button to display Drying.
3. Press the [F2] or [F3] button to set the desired temperature.

Note

The set temperature changes 2°F when the [F2] or [F3] button is pressed one time. Drying 67 to 87°F

1. Thermoregulating function

(1) Thermo regulating function (Function to prevent restarting for 3 minutes)

- Setting the Dry thermo by the thermo regulating signal and the room temperature (TH21).

Dry thermo ON Room temperature ≥ desired temperature + 2°F
Dry thermo OFF Room temperature ≤ desired temperature

Room temperature	3 min. passed since starting operation		Dry thermo ON time (min)	Dry thermo OFF time (min)
	Thermo regulating signal	Room temperature (T1)		
Over 64°F	ON	T1 ≥ 83°F	9	3
		83°F > T1 ≥ 79°F	7	3
		79°F > T1 ≥ 75°F	5	3
		75°F > T1	3	3
	OFF	Unconditional	3	10
Less than 64°F	Dry thermo OFF			

(2) Frozen prevention control

- No control function

2. Fan

(1) Indoor fan operation controlled depends on the compressor conditions.

Dry thermo	Fan speed notch	
ON	[Low]	
OFF	Excluding the following	Stop
	Room temp. < 64°F	[Low]

Note

Remote controller setting is not acceptable.

3. Drain pump

(1) Same control as Cool operation

3. Fan operation

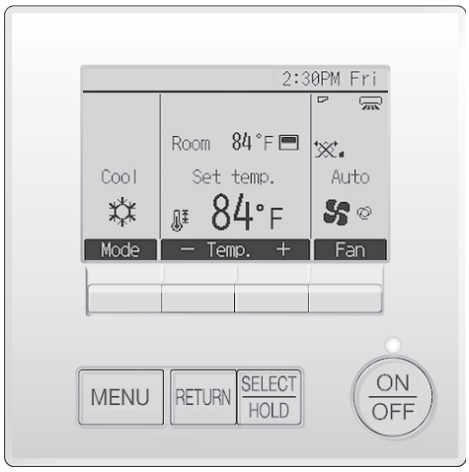

<How to operate>

1. Press POWER [ON/OFF] button.
2. Press the [F4] button to display Fan.

1. Fan

(1) Set by remote controller.

Type	Fan speed notch
3 speeds + Auto type	[Low], [Mid], [High], [Auto]

♦When [Auto] is set, fan speed becomes [Low].

2. Drain pump

(1) Drain pump control

♦The drain pump turns ON for the specified amount of time when any of the following conditions is met:

1) ON for 3 minutes after the operation mode is switched from Cool or Drying to another operation mode (Fan).
2) ON for 6 minutes after the float switch is submerged in the water when the float switch control judges the sensor is in the water.

(2) Float switch control

♦Float switch control judges whether the sensor is in the air or in the water by turning the float switch ON/OFF.
In the water : Detected that the float switch is ON for 15 seconds.
In the air : Detected that the float switch is OFF for 15 seconds.

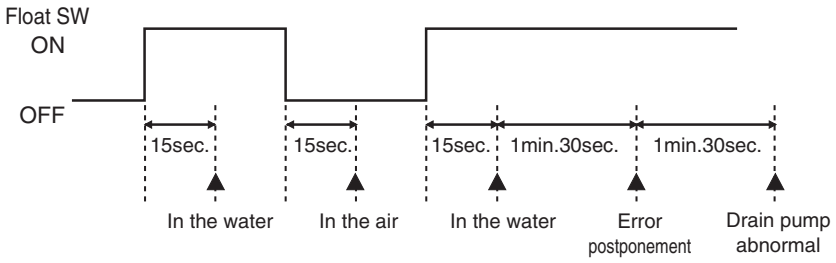

4. Heat operation

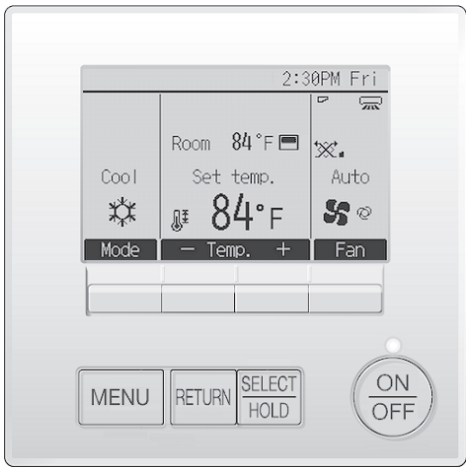

<How to operate>

1. Press POWER [ON/OFF] button.
2. Press the [F1] button to display Heat.
3. Press the [F2] or [F3] button to set the desired temperature.

Note

The set temperature changes 2°F when the [F2] or [F3] button is pressed one time. Heating 63 to 83°F.

<Display in Heat operation>

[DEFROST]
The [DEFROST] symbol is only displayed during the defrost operation.
[STANDBY]
The [STANDBY] symbol is only displayed during the hot adjust mode.

1. Thermoregulating function

(1) Thermoregulating function (Function to prevent restarting for 3 minutes)

- Room temperature ≤ desired temperature -2°F …Thermo ON
- Room temperature ≥ desired temperature …Thermo OFF

2. Fan

(1) By the remote controller setting (switch of 3 speeds+Auto)

Type	Fan speed notch
3 speeds + Auto type	[Low], [Mid], [High], [Auto]

- When [Auto] is set, fan speed is changed depending on the value of:
  Desired temperature - Room temperature
  Give priority to under-mentioned controlled mode

1) Hot adjust mode
2) Preheating exclusion mode
3) Thermo OFF mode (When the compressor off by the thermoregulating)
4) Cool air prevention mode (Defrosting mode)
5) Capacity increasing mode

(2) Hot adjust mode

- The fan controller becomes the hot adjuster mode for the following conditions.

1) When starting the Heat operation
2) When the thermoregulating function changes from OFF to ON.
3) When release the Heat defrosting operation

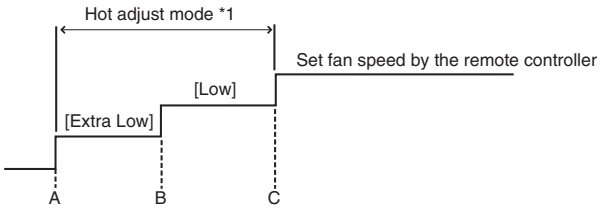

A: Hot adjust mode starts.
B: 5 minutes have passed since the condition A or the indoor water outlet pipe temperature turned 95°F or more.
C: 2 minutes have passed since the condition A. (Terminating the hot adjust mode)

Note

*1 "STAND BY" will be displayed during the hot adjust mode.

(3) Preheating exclusion mode

- When the condition changes the auxiliary heater ON to OFF (thermoregulating or operation stop, etc.), the indoor fan operates in [Low] mode for 1 minute.

Note

This control is same for the model without auxiliary heater.

(4) Thermo OFF mode

- When the thermoregulating function changes to OFF, the indoor fan operates in [Extra low].

(5) Heat defrosting mode

- The indoor fan stops.

3. Drain pump

(1) Drain pump control

- The drain pump turns ON for the specified amount of time when any of the following conditions is met:

1) ON for 3 minutes after the operation mode is switched from Cool or Drying to another operation mode (Fan).
2) ON for 6 minutes after the float switch is submerged in the water when the float switch control judges the sensor is in the water.

(2) Float switch control

- Float switch control judges whether the sensor is in the air or in the water by turning the float switch ON/OFF.

In the water : Detected that the float switch is ON for 15 seconds.
In the air : Detected that the float switch is OFF for 15 seconds.

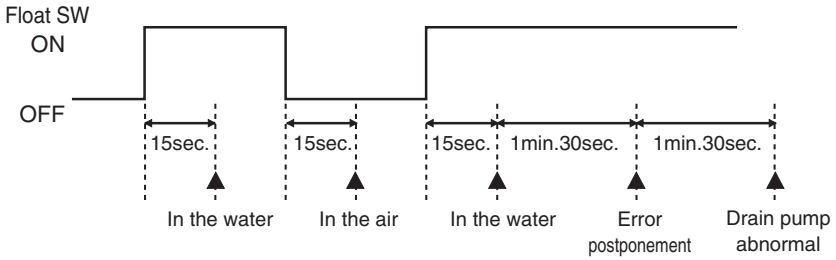

5. Auto operation [Automatic Cool / Heat change over operation]

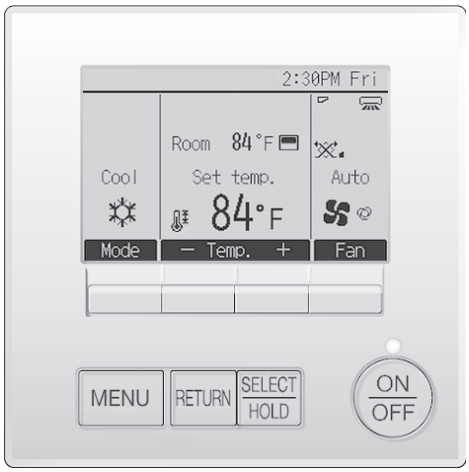

<How to operate>

1. Press POWER [ON/OFF] button.
2. Press the [F1] button to display Auto.
3. Press the [F2] or [F3] button to set the desired temperature.

Note

The set temperature changes 2°F when the [F2] or [F3] button is pressed one time. Automatic 67 to 83°F

1. Initial value of operation mode

(1) Heat mode for room temperature < Desired temperature
(2) Cool mode for room temperature ≥ Desired temperature

2. Mode change

(1) Heat mode -> Cool mode
Room temperature ≥ Desired temperature + 3°F. or 3 min. has passed
(2) Cool mode -> Heat mode
Room temperature ≤ Desired temperature - 3°F. or 3 min. has passed

3. Cool mode

(1) Same control as Cool operation

4. Heat mode

(1) Same control as heat operation
The value "3°F" is modifiable from 1.8°F to 9°F by maintenance tool.

6. When unit is stopped control mode

1. Drain pump

(1) Drain pump control

♦The drain pump turns ON for the specified amount of time when any of the following conditions is met:

1) ON for 3 minutes after the operation mode is switched from Cool or Drying to another operation mode (Fan).
2) ON for 6 minutes after the float switch is submerged in the water when the float switch control judges the sensor is in the water.

(2) Float switch control

♦Float switch control judges whether the sensor is in the air or in the water by turning the float switch ON/OFF.
In the water : Detected that the float switch is ON for 15 seconds.
In the air : Detected that the float switch is OFF for 15 seconds.

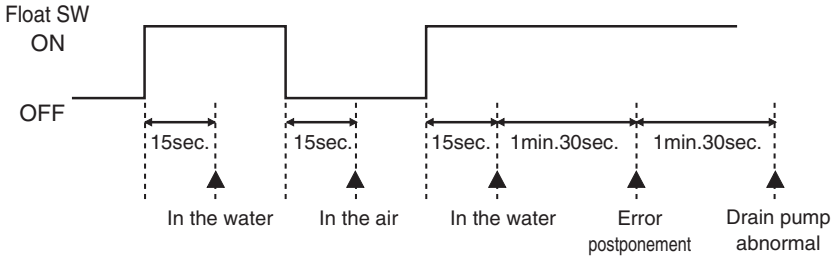

7. Heater control

1. Control specifications and DIP S/W setting

♦Table 1 shows the function settings the field-installed heater. Select the desired pattern in the table below, and set the DIP SW on the outdoor and indoor units as shown in Table 1.

Table.1

Outdoor unit setting	Condition of outdoor unit		TPEFYW004, 006, 008, 012, 015, 018MS1W0A				
			DIP S/W (Indoor unit)*1		Heater control		
			SW3-2	SW3-4	Pattern	Defrost	Error
DIP S/W OFF *3	N / A		OFF	-	Heater not Available		
			ON	OFF	Heater Available	OFF	OFF
			ON	ON	Heater Available	ON	ON*2
DIP S/W ON *3	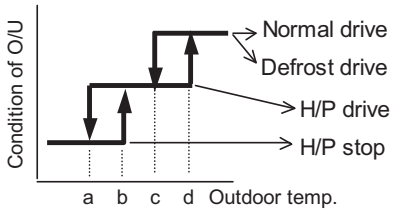 Parameters a/b/c/d are set by maintenance tool.	Normal drive	OFF	-	Heater not Available		
			ON	OFF	Heater Available	OFF	OFF
			ON	ON	Heater Available	ON	ON*2
		Defrost drive H/P drive H/P stop	OFF	-	Heater not Available		
			ON	OFF	Heater Available	OFF	OFF
			ON	ON	Heater Available	ON	ON*2

*1 Default settings: SW3-2 OFF, SW3-4 OFF
*2 Heater will not operate during all error modes.
*3 Please set function codes that are shown on outdoor unit service manuals (DIP S/W Functions).
*4 Heater On signal can not be output in the following cases for safety reasons.
- Return air temperature sensor fault (Error code: 5101)
- Indoor unit fan operation error (Error code: 4109)
- Indoor unit fan motor error (Error code: 4114)
- Transmission error (Error code: 6***, 7***)
- When heating mode is prohibited
- When demand control or capacity save is set to 0%
- For a few minutes when change from thermo OFF to ON or ON to OFF in R2/WR2 system

♦Table 2 shows how the field-installed heater is controlled.

Table.2 [Heater Control Table]

Mode Change	Condition				
EH1 ON	(To -T_{RA}) > 2.7 °F [1.5 °C]	AND	T_{RA} has not increased by 0.9 °F [0.5°C] in X min		
EH2 ON	EH1 ON for > 5 min	AND	(To -T_{RA}) > 2.7 °F [1.5 °C]	AND	T_{RA} has not increased by 0.9 °F [0.5°C] in 5 min
EH1 OFF	(To -T_{RA}) ≤ 0.9 °F [0.5 °C]				
EH2 OFF					

KEY
- EH1: Electric Heater 1
- EH2: Electric Heater 2
- To: Set point temperature
- T_{RA}: Return Air temperature
- X: Time delay (Selectable. Default is 20 min. Selectable to 10, 15, or 25 min)

♦Table 3 shows how the time delay is selected.

Table.3 [Time Delay Selection Table]

Function Setting *1	Action *3
108-1	Set Time Delay to 10 minutes
108-2	Set Time Delay to 15 minutes
108-3	Set Time Delay to 20 minutes *2
108-4	Set Time Delay to 25 minutes

*1 Time delay can only be selected with MA controller. If use of a non-MA controller is desired, the time delay must first be selected with the MA controller. Then the non-MA controller can be attached and used.

*2 The default time delay setting is 20 minutes.

*3 Time delays are approximate.

•Chart 1 and Table 4 show an example of heater operation.

Chart 1 [Heater Operation Example]

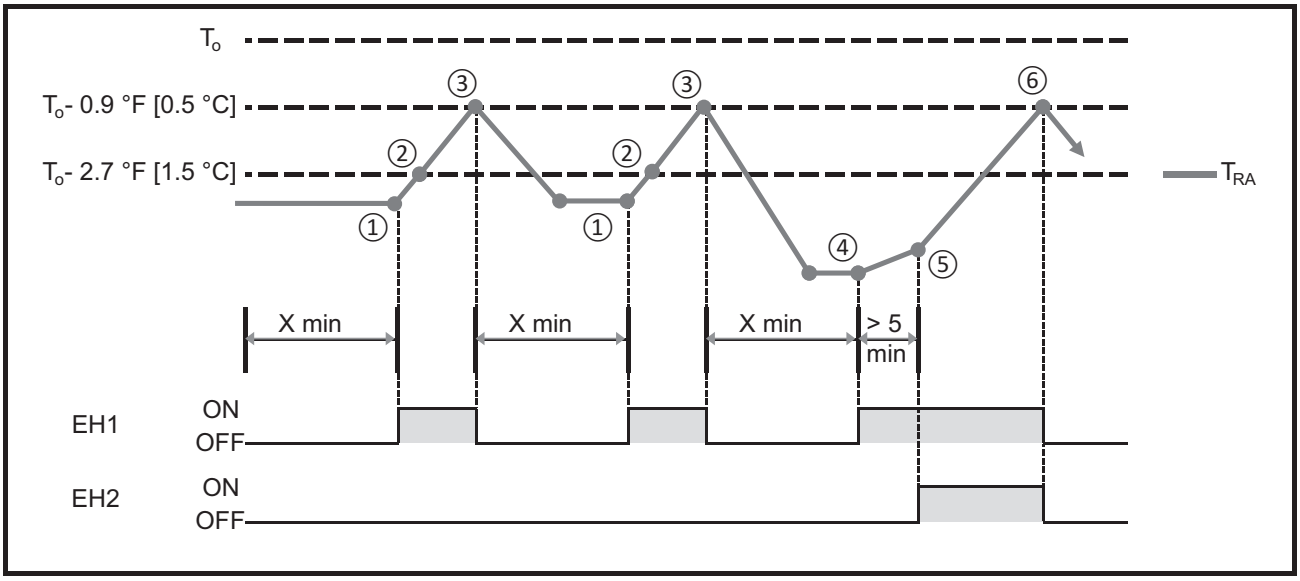

Table.4 [Heater Operation Example]

Step	Condition			Result
①	(To -T_{RA}) > 2.7 °F [1.5 °C]	AND	T_{RA} has not increased by 0.9 °F [0.5°C] in X min	EH1 ON
②	(To -T_{RA}) ≤ 2.7 °F [1.5 °C]	AND	T_{RA} increasing faster than 0.9 °F [0.5°C] in 5 min	EH2 not ON
③	(To -T_{RA}) ≤ 0.9 °F [0.5°C]			EH1 OFF
④	(To -T_{RA}) > 2.7 °F [1.5 °C]	AND	T_{RA} has not increased by 0.9 °F [0.5°C] in X min	EH1 ON
⑤	(To -T_{RA}) > 2.7 °F [1.5 °C]	AND	T_{RA} not increasing faster than 0.9 °F [0.5°C] in 5 min	EH2 ON
⑥	(To -T_{RA}) ≤ 0.9 °F [0.5°C]			EH1 OFF EH2 OFF

♦Chart 2 show how heater is on.

The software has the function to turn on electric heater 5 minutes after turning on remote controller in case that outdoor unit cannot operate in heating mode because the system is in cooling priority mode. This function is available when function setting No.123 is set to “2”.

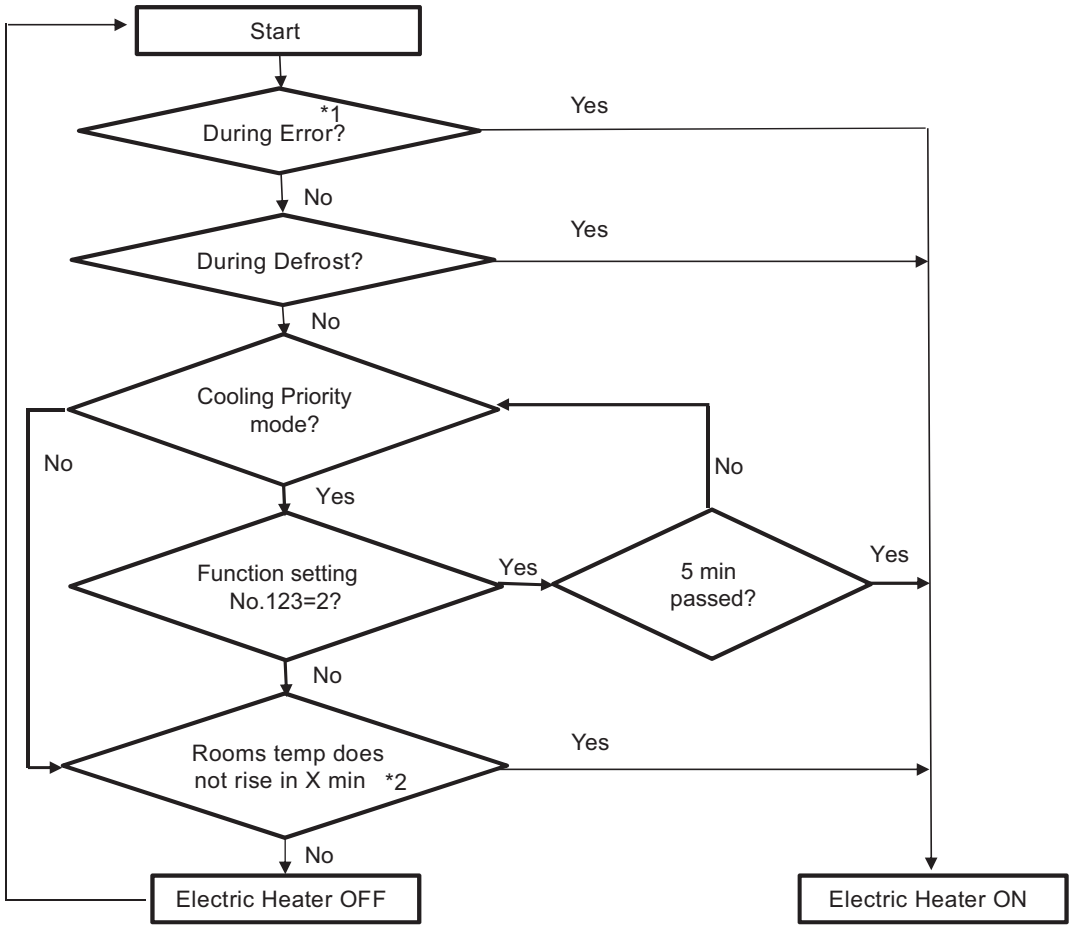

*1. The heater will not turn on in the error of TH1 thermistor or fan motor.
*2. X (time delay) default is 20 min and changeable by function setting, see Table 3.

Note

(1) Turning on the heater with the fan setting set to OFF requires that the DIP S/W and connectors on the indoor units are set on site.

Fan control

<table>
<tr><th rowspan="2">Pattern</th><th rowspan="2">CN22 for FAN control (PAC-YU25HT)</th><th rowspan="2">DIP SW3-2 (Indoor unit)</th><th rowspan="2">DIP SW3-4 (Indoor unit)</th><th colspan="2">in error *1 *5</th><th colspan="2">in defrost</th><th colspan="2">All modes other than defrost and error</th></tr>
<tr><th>Fan</th><th>Heater</th><th>Fan</th><th>Heater</th><th>Fan</th><th>Heater</th></tr>
<tr><td>1</td><td rowspan="3">Disabled</td><td rowspan="4">ON</td><td>OFF</td><td>FAN ON *2</td><td>OFF</td><td>Stop</td><td>OFF</td><td>High *3</td><td>ON</td></tr>
<tr><td rowspan="2">2</td><td rowspan="2">ON</td><td>High
(DIP SW1-7: ON and SW1-8: OFF)
or
(DIP SW1-7: OFF and SW1-8: ON)</td><td>ON</td><td>High
(DIP SW1-7: ON and SW1-8: OFF)
or
(DIP SW1-7: OFF and SW1-8: ON)</td><td>ON</td><td colspan="2">In heating Thermo-Off
Fan: High (DIP SW1-7: ON and SW1-8: OFF) or (DIP SW1-7: OFF and SW1-8: ON)
Heater: ON</td></tr>
<tr><td>Very low
(DIP SW1-7: OFF and SW1-8: OFF)
STOP
(DIP SW1-7: ON and SW1-8: ON)</td><td>OFF</td><td>Very low
(DIP SW1-7: OFF and SW1-8: OFF)
STOP
(DIP SW1-7: ON and SW1-8: ON)</td><td>OFF</td><td colspan="2">In heating Thermo-Off
Fan: Very low (DIP SW1-7: OFF and SW1-8: OFF) STOP (DIP SW1-7: ON and SW1-8: ON)
Heater: OFF</td></tr>
<tr><td>3</td><td rowspan="2">Enabled</td><td>OFF</td><td>FAN ON *2</td><td>OFF</td><td>Stop</td><td>OFF</td><td rowspan="2">*4</td><td rowspan="2">ON</td></tr>
<tr><td>4</td><td>ON</td><td>FAN ON *2</td><td>ON</td><td>Stop</td><td>ON</td></tr>
</table>

*1 Heater will not operate during all error modes.

*2 The fan speed in the Heating Thermo-OFF mode depends on the settings of DIP-SW 1-7 and 1-8. Refer to VIII-[1]-5-1 Function setting.

*3 While the heater is on, the fan will operate at high speed regardless of the fan setting on the remote controller.

*4 The fan speed depends on the settings of the remote controller. The heater turns on regardless of the fan speed.

*5 The fan stops and the heater turns off, depending on the type of error.

*** If a heater is installed in the duct, do not use CN22. By doing so, the fan will turn off when the heater is on, which may result in fire.**

(2) Back-up heating will not be performed when the heater turns on while demand control is performed (not a request item).

(3) Make the settings for the following dip switches on the outdoor unit control board before switching on the power.

2. Time Delay canceled
   Information above is about when the Time Delay function is available.
   Function setting 107 set to 2 enables the Time Delay function, and set to 1 cancels the function.
   Detailed information when the Time Delay function is canceled is as follows.

Table.5 Function setting 107 = 1 (Time Delay canceled)

Outdoor unit setting	Condition of outdoor unit		DIP S/W (Indoor unit)*1	Heater control			
			SW 3-4	EH1	EH2	Defrost	Error
DIP S/W OFF *3	N / A		OFF	Heater Avail-able	Heater not Avail-able	OFF	OFF
			ON	Heater Available		ON	ON*2
DIP S/W ON *3	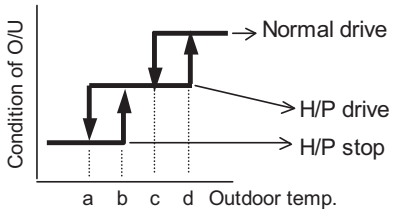 Parameters a/b/c/d are set by maintenance tool.	Normal drive	OFF	Heater not Available		OFF	OFF
			ON			ON	OFF
		H/P drive H/P stop	OFF	Heater Avail-able	Heater not Avail-able	OFF	OFF
			ON	Heater Available		ON	ON*2

*1 Default settings: SW3-2 OFF, SW3-4 OFF
*2 Heater On signal can not be output in the following cases for safety reasons.
- Return air temperature sensor fault (Error code: 5101)
- Indoor unit fan operation error (Error code: 4109)
- Indoor unit fan motor error (Error code: 4114)
- Transmission error (Error code: 6***, 7***)
- When heating mode is prohibited
- When demand control or capacity save is set to 0%

*3 Please set function codes that are shown on outdoor unit service manuals (DIP S/W Functions).

Table.6 Heater ON/OFF condition for function setting 107 = 1 (Time Delay canceled)

DIP SW3-4	ON	ON	OFF
DIP SW3-2	ON	OFF	ON/OFF
Mode Change	Condition		
EH1 ON	$(T_O - T_{RA}) > 1.5°C + Thh1$	$(T_O - T_{RA}) > 0.5°C + Thh1$	$(T_O - T_{RA}) > 1.5°C + Thh1$
EH2 ON	$(T_O - T_{RA}) > 2.0°C + Thh1$	$(T_O - T_{RA}) > 1.0°C + Thh1$	Not Available
EH1 OFF	$(T_O - T_{RA}) \leq 0.5°C$	$(T_O - T_{RA}) \leq -0.5°C$	$(T_O - T_{RA}) \leq -0.5°C$
EH2 OFF			

EH1: Electric Heater 1
EH2: Electric Heater 2
T_O: Set point temperature
T_{RA}: Return air temperature
Thh1: The additional differential for heater output can be set by function setting 84 and 85 as shown in Table 7 below.

Table.7 Function setting 84 and 85

No.84	°C	No.85	°C
1	1	1	0.1
2	2	2	0.2
3	3	3	0.3
4	4	4	0.4
5	5	5	0.5
10	0	6	0.6
		7	0.7
		8	0.8
		9	0.9
		10	0.0

Disclaimer

Use of this setting may conflict with certain local energy efficiency standards. Please check local requirements. Cancelation of the Time Delay function is intended for use in the Canadian market only and may not be reproduced or distributed without express written permission of MITSUBISHI ELECTRIC TRANE HVAC US LLC.

3. PAC-YU25HT (Optional Parts) installation

The following section describes installation of the External Heater Adapter that connects to indoor unit. This products is the special wiring parts to drive an electric heater with the air conditioner.

(1) Parts list

•Check that the following parts are included in the package.

1) External output cable.....2 in total
Two types of cables with different connectors are included.

2) Fan control connector.....3 in total
White: 1
Green: 2 (2 types)

(2) Connection to the indoor unit

- Use the cables that fit the connectors on the indoor unit control board.

1) External output cable (with a yellow connector)
This cable is used to connect a relay circuit for an interlocked operation with either an electric or a panel heater.Select the heater output pattern (1st =CN24 or 2nd = CN24A) to use, and connect the cable to the connector on the indoor unit control board that corresponds to the selection.

2) Fan control connector (with a green connector)
This connector is used to perform an interlocked operation with a panel heater. Depending on the indoor unit control board specification, connect the cable to CN22 as appropriate.

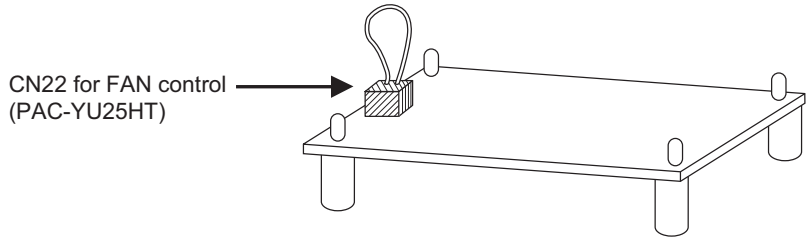

(3) Wiring

- A basic connection method is shown below.

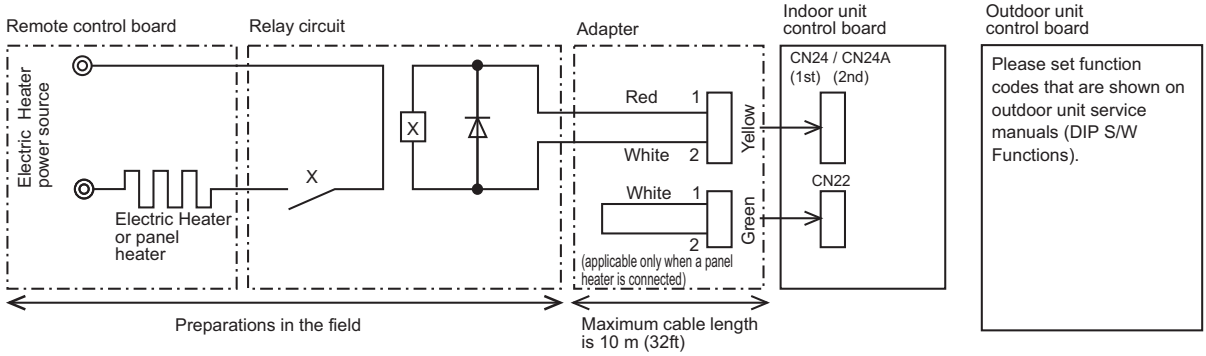

- For relay X, use the specifications given below.
  Operation coil
  Rated voltage: 12VDC
  Power consumption: 0.9W or less
  * Use the diode that is recommended by the relay manufacturer at both ends of the relay coil.
- The length of the electrical wiring for the PAC-YU25HT is 2 meters (6-1/2 ft.)
- To extend this length, use sheathed 2-core cable.
  Control cable type: CVV, CVS, CPEV or equivalent.
  Cable size: 0.5 mm^2 ~ 1.25 mm^2 (16 to 22 AWG)
  Don't extend the cable more than 10 meters (32ft)

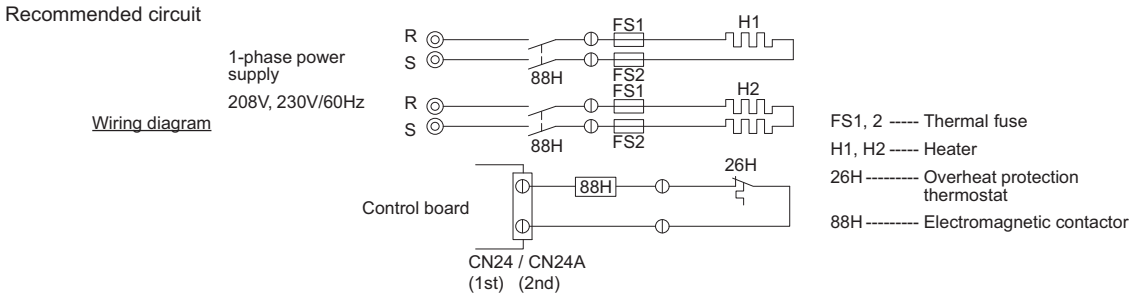

(4) Wiring restrictions

- Keep the length of the cable connecting to the circuit board of the indoor unit shorter than 10 meters (32ft).
- Longer than 10 meters (32ft) could cause improper operation.
- Use a transit relay when extending wiring such as remote wiring.

[1] Troubleshooting

1. Check methods

1. Component and check points

(1) Thermistor

- Room temperature thermistor (TH21)
- Water inlet thermistor (TH22)
- Water outlet thermistor (TH23)

Disconnect the connector and measure the resistance between terminals with a tester.
(Ambient temperature 10°C - 30°C[50°F-86°F])

Normal	Abnormal
4.3kΩ - 9.6kΩ	Open or short

(Refer to the thermistor characteristic graph below.)

1) Thermistor characteristic graph

Low-temperature thermistor

- Room temperature thermistor (TH21)
- Water inlet thermistor (TH22)
- Water outlet thermistor (TH23)
- Drain sensor (DS)

- Thermistor R_0 = 15 kΩ±3%
- Multiplier of B = 3480 kΩ±2%

$$Rt = 15 \exp \{ 3480(\frac{1}{273+t} - \frac{1}{273}) \}$$

0°C	32°F	15kΩ
10°C	50°F	9.6kΩ
20°C	68°F	6.3kΩ
25°C	77°F	5.2kΩ
30°C	86°F	4.3kΩ
40°C	104°F	3.0kΩ

(A) Temperature (°C)[°F]

(B) Resistance (kΩ)

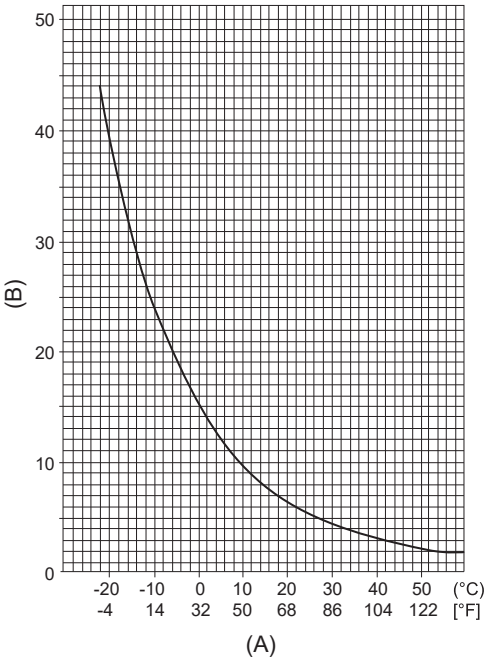

(2) Fan motor (CNMF)

Refer to the page on "DC fan motor (fan motor/indoor control board)."

(3) Drain pump

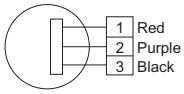

1. Check if the drain float switch works properly.
2. Check if the drain pump works and drains water properly in cooling operation.
3. If no water drains, confirm that the check code 2502 will not be displayed 10 minutes after the operation starts.

Note: The drain pump for this model is driven by the internal DC motor of controller board, so it is not possible to measure the resistance between the terminals.

Normal
Red–Black: Input 13V DC → The fan starts to rotate.
Purple–Black: Abnormal (check code 2502) if it outputs 0–13 V square wave (5 pulses/rotation), and the number of rotation is not normal.

(4) Drain float switch (CN4F)

Disconnect the connector, and measure the resistance between terminals with a tester.

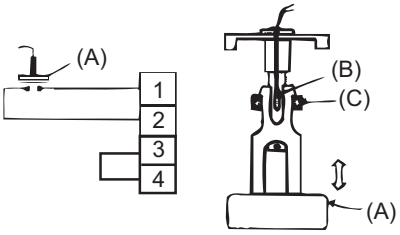

(A) Moving part
(B) Switch
(C) Magnet

Position of the moving part	Normal	Abnormal
Up	Short	(any position but short)
Down	Open	(any position but open)

2. DC fan motor (fan motor/indoor control board)

1. CAUTION
   - A high voltage is applied to the connector for connection to the fan motor (CNMF).
   - Do not unplug the connector CNMF with the unit energized to avoid damage to the indoor control board and fan motor.

2. Troubleshooting
   - Symptom: Indoor unit fan does not run.

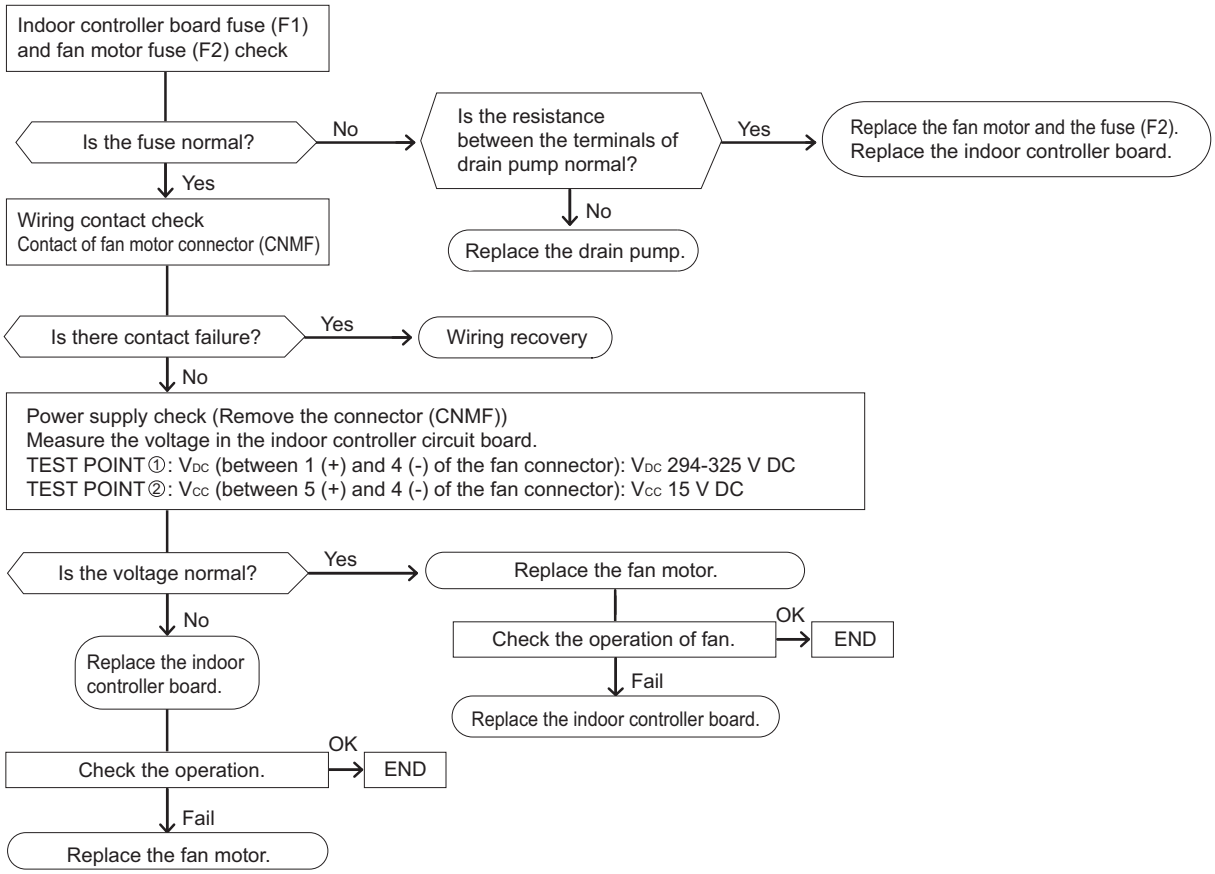

3. Address switch setting

Make sure that power to the unit is turned off.

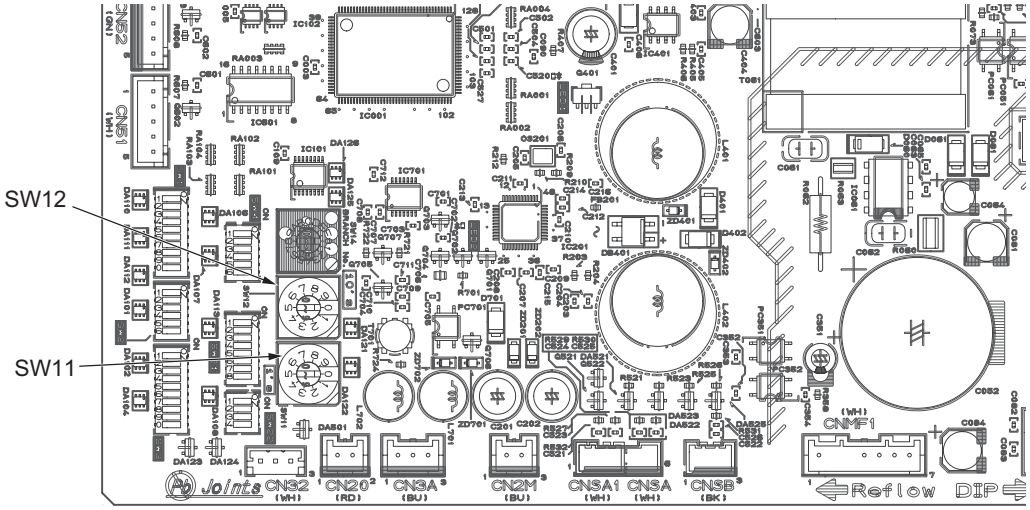

<Indoor controller board>

1. When using an ME remote controller, set the address with the rotary switches (SW11, SW12).
   ♦Address setting is not required when the unit remote controller is used.
   On-site address setting is required for the indoor units to run.

2. Address settings vary in different systems.
   Refer to the section on address setting in the outdoor unit installation manual.

3. Address is set with a combination of SW12 (10's digit) and SW11 (1's digit).
   To set the address to "3," set SW12 to "0" and SW11 to "3."
   To set the address to "25," set SW 12 to "2" and SW 11 to "5."

4. Voltage test points on the control board

1. TPEFYW004, 006, 008, 012, 015, 018MS1W0A

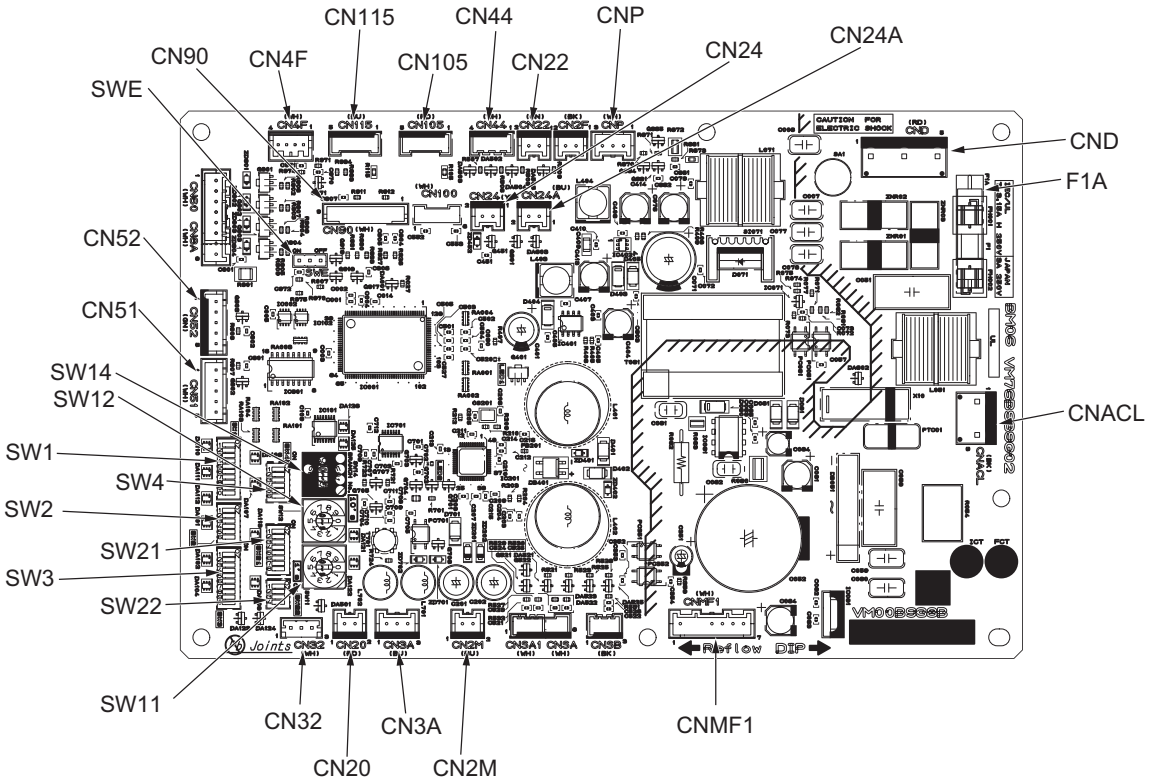

CN52	Remote display
CN51	Centralized control
SWE	Emergency operation
SW1	Function setting
SW2	Capacity setting
SW3	Function setting
SW4	Function setting
SW11	1's digit address set
SW12	10's digit address set
SW14	Branch No.
SW21	For static pressure selection
SW22	Wireless pair No.
CN32	Remote start/stop adapter
CN20	Thermistor (Inlet temperature)
CN3A	For MA remote controller cable connection (10-13 VDC (Between 1 and 3))
CN2M	For M-NET transmission cable connection (24-30 VDC)
CNMF1	Fan motor output 1 - 4: 294 - 325 VDC 5 - 4: 15 VDC 6 - 4: 0 - 6.5 VDC 7 - 4: Stop 0 or 15 VDC Run 7.5 VDC (0 - 15 pulse)

CNACL	ACL (only for TPEFYW018MS1W0A)
F1A	Fuse (400 VDC 1A)
CND	Power supply Voltage (208-230 VAC)
CN4F	Float switch
CN90	Wireless remote controller
CN115	IT terminal
CN105	IT terminal
CN44	Thermistor (liquid/gas temperature)
CN22	For fan control
CN24	Heater control 1st
CN24A	Heater control 2nd
CNP	Drain-up mechanism output (13 VDC (Between 1 and 3))

(*1)

V_{FG}: Voltage on the (-) side of PC352 and C084 (Same with the voltage between 7 (+) and 4 (-) of CNMF)

V_{CC}: Voltage between the C084 pins 15 VDC (Same with the voltage between 5 (+) and 4 (-) of CNMF)

Vsp: Voltage between the C351 pins 0 VDC (with the fan stopped) 1 - 6.5 VDC (with the fan in operation) (Same with the voltage between 6 (+) and 4 (-) of CNMF)

5. Dipswitch setting (Factory setting)

1. Function setting

(1) SW1

Switch position	Function	Switch setting	
		ON	OFF
1	Active Thermistor (Intake air thermistor)	Built-in thermistor on the remote controller	Indoor unit
2	Filter clogging detection	Available	Unavailable
3	Filter life	2500 hr	100 hr
4	Outdoor air intake	Enabled	Disabled
5	Remote display	Thermo-ON signal	Fan output
6	-	-	-
7	Fan speed at heating Thermo-OFF		
8			
9	Auto restart after power failure	Enabled	Disabled
10	Power start/stop	Enabled	Disabled

7	8	Fan speed notch in heating thermo off
OFF	OFF	Very low
ON	OFF	Low
OFF	ON	Preset fan speed
ON	ON	Stop

1) Indoor control board
Dipswitch settings must be made while the unit is stopped.

Factory setting

(2) SW3

Switch position	Function	Switch setting	
		ON	OFF
1	Unit type	Cooling only	Heat pump
2	Heater available	Heater available	Heater not available
3	-	-	-
4	Heater Control	Heater ON during defrost and error	Heater OFF during defrost and error
5	-	-	-
6	-	-	-
7	-	-	-
8	Heating 4-deg up	Disabled	Enabled
9	-	-	-
10	-	-	-

1) Indoor control board
Dipswitch settings must be made while the unit is stopped.

Factory setting

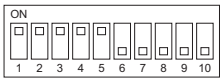

The figure at left shows that the switches 1 through 5 are set to ON and 6 through 10 are set to OFF.

2. Capacity code setting

(1) SW2

Dipswitch settings must be made while the unit is stopped.
Factory setting
The switches are set to correspond to the unit capacity.

TPEFYW004MS1W0A TPEFYW006MS1W0A TPEFYW008MS1W0A

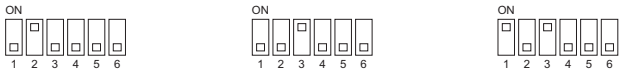

TPEFYW012MS1W0A TPEFYW015MS1W0A TPEFYW018MS1W0A

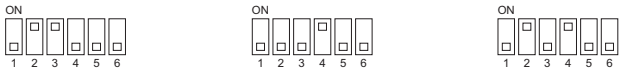

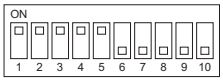

The figure at left shows that the switches 1 through 5 are set to ON and 6 through 10 are set to OFF.

3. Model setting

(1) SW4

Dipswitch settings must be made while the unit is stopped.

Factory setting
Please see the WIRING LABEL on the control box.

Note:
Changes made to the dipswitches SW1, SW2, and SW3 will become effective when the unit comes to a stop (remote controller off). There is no need to power cycle the unit.

4. External static pressure

Four levels of external static pressure are available for selection.
Set the setting either by using the switches on the control board (SW21-1, SW21-2, and SW21-5) or from the function selection screen on the remote controller.

Note:

- **When the static pressure setting was set from the remote controller, the actual setting and the switch setting on the control board may not match because the latest setting from the remote controller overrides the previous setting. To check the latest static pressure setting, check it on the remote controller, not on the switch.**
- **If the static pressure setting for the duct is lower than that for the unit, the fan of the unit may repeat start/stop, and the outdoor unit may remain in a stopped state. Match the static pressure settings for the unit to that for the duct.**

To set the external static pressure with the switches on the control board

External static pressure	SW21-1	SW21-2	SW21-5	Initial setting
0.02 in. WG (5 Pa)	OFF	ON	ON	
0.06 in. WG (15 Pa)	OFF	ON	OFF	○
0.14 in. WG (35 Pa)	OFF	OFF	OFF	
0.20 in. WG (50 Pa)	ON	OFF	OFF	

To set the external static pressure from the function selection screen on the remote controller (TAR-42MAAUB)
Follow the instructions below and the instructions detailed in the remote controller manual for how to set the switches.
1. Set the function setting No. 32 (Switch setting/Function selection) to “2”.
2. Set the function setting No. 8 and No. 10 to appropriate values, according to the external static pressure.

Selection	Function setting No.	Initial setting	Current setting
	No. 32		
Switch setting	1	○	
Function selection	2		

External static pressure	Function setting No.		Initial setting	Current setting
	No. 8	No. 10		
0.02 in. WG (5 Pa)	1	2		
0.06 in. WG (15 Pa)	1	1	○	
0.14 in. WG (35 Pa)	2	1		
0.20 in. WG (50 Pa)	3	1		

[Important]
Be sure to write down the settings for all functions in the “Current setting” row if any of the initial settings has been changed.

5. 1s and 10ths digits
(1) SW11, SW12 (Rotary switch)
The use of an ME remote controller requires address setting.

Address settings must be made while the unit is stopped.

Factory setting

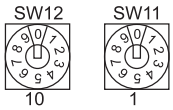

6. Connection No. setting
(1) SW14 (Rotary switch)
This switch is used when the unit connected to an R2 series of outdoor unit.

Factory setting

Note:
Changes to the dipswitches SW11, SW12, SW14, and SW15 must be made while the unit is stopped and the remote controller is OFF.

[1] Disassembly Procedure

1. Control box

Exercise caution when removing heavy parts.

1. Removing the control box cover

(1) Remove the two fixing screws on the cover (A) to remove it.

♦Tighten screws to a torque of 2.0±0.2 N·m.

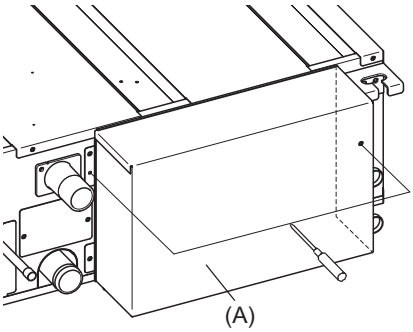

Fig.1

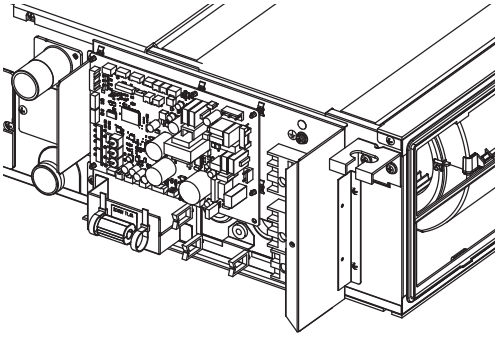

Fig.2

2. Thermistor (Intake air)

Exercise caution when removing heavy parts.

1. Remove the control box cover according to the procedure in section **1**.

2. Remove the thermistor.

(1) Pull out the thermistor (B) on the control box.

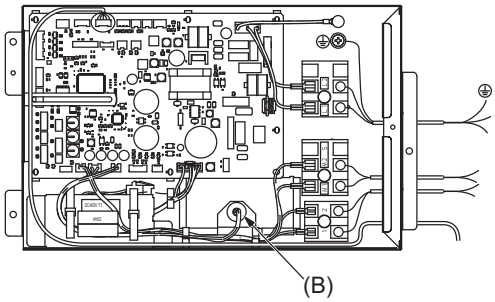

Fig.3

3. Drain pan

Exercise caution when removing heavy parts.

1. Removing the filter and the bottom plate

(1) Push up the tab on the filter in the direction of arrow (a), and pull out the filter in the direction of the arrow 1.

(2) Remove the fixing screws on the bottom plate (C), (D) to remove it.

- Tighten screws to a torque of 1.4±0.2 N·m.

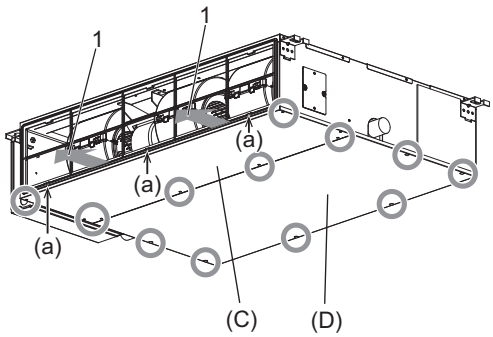

Fig.4

2. Removing the drain pan

(1) Pull out the drain pan in the direction of the arrow 2.

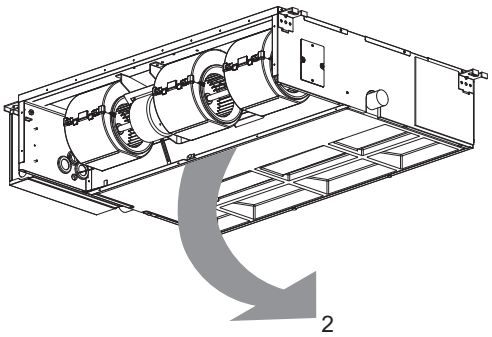

Fig.5

Note
- **Drain the water out of the drain pan before removing it.**
- **To avoid dew condensation, use insulated screws in the places marked with circles in Figure 6.**

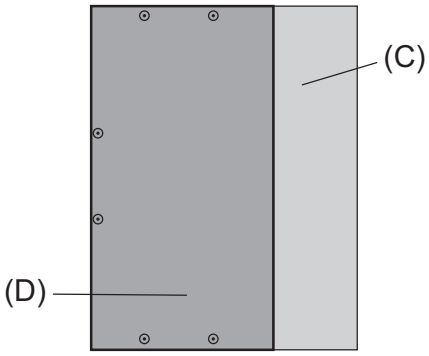

Fig.6

4. Drain pump

Exercise caution when removing heavy parts.

1. Remove the control box cover according to the procedure in section **1**, and remove the drain pump connector.
2. Remove the bottom plate and drain pan according to the procedure in section **3**.
3. Remove the drain pump.

(1) Remove the fixing screws (E) of drain pump.

(2) Remove the drain pump.

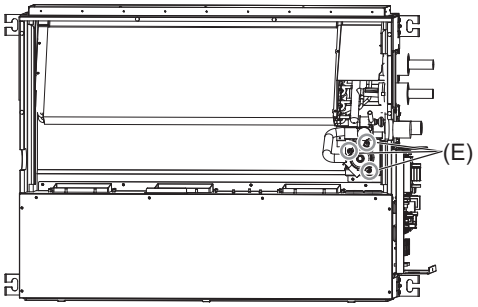

Bottom View

Fig.7

5. Thermistor (Water inlet/outlet piping temperature detection)

Exercise caution when removing heavy parts.

1. Remove the drain pan according to the procedure in section 3.
2. Removing the Heat exchanger cover

(1) Remove the four fixing screws on the heat exchanger cover (F) to remove it.

♦Tighten screws to a torque of 1.4±0.2 N·m.

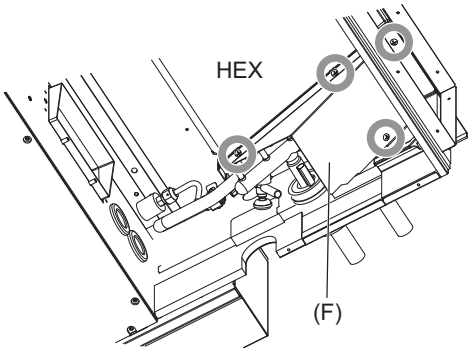

Fig.8

3. Removing the thermistor

(1) Remove the thermistor (G) from the thermistor holder (H) on the copper tube.

Thermistor size
Water inlet pipe: ø8mm
Water outlet pipe: ø6mm

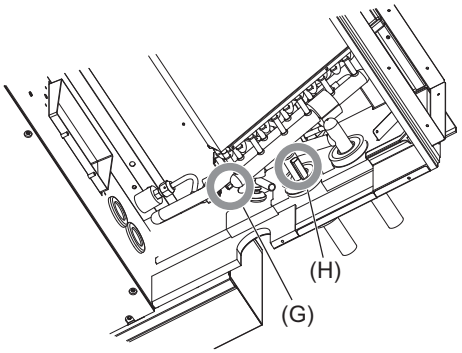

Fig.9

6. Fan and fan motor

Exercise caution when removing heavy parts.

1. Removing the filter and the bottom plate

(1) Push up the tab on the filter in the direction of arrow (a), and pull out the filter in the direction of the arrow 1.

(2) Remove the fixing screws on the bottom plate (J) to remove it.

♦Tighten screws to a torque of 1.4±0.2 N·m.

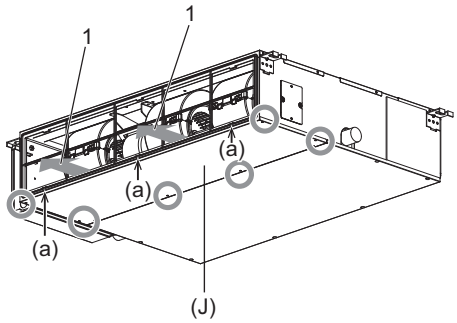

Fig.10

2. Removing the fan casing (bottom half)

(1) Squeeze the tabs on the fan casing to remove it in the direction of arrow 2.

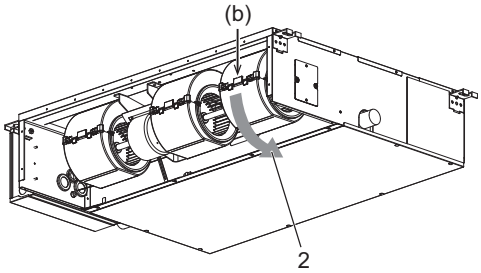

Fig.11

3. Removing the motor cable

(1) Remove the motor cable threw the rubber bush.

4. Removing the fan motor and the Sirocco fan

(1) Remove the two motor fixing screws to remove the motor and the Sirocco fan in the direction of arrow 3.

♦Tighten screws to a torque of 3.5±0.2 N·m.

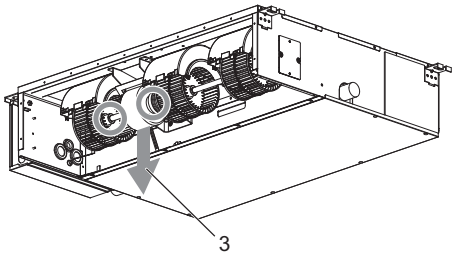

Fig.12

(2) Remove the four fan case fixing screws to take the top half of the fan casing off.

♦Tighten screws to a torque of 1.4±0.2 N·m.

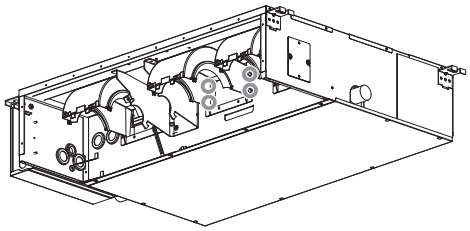

Fig.13

7. Heat exchanger

Exercise caution when removing heavy parts.

1. Remove the drain pan according to the procedure in section **3**.

2. Remove the heat exchanger cover according to the procedure in section **5.**2.

3. Removing the cover

(1) Remove the two fixing screws on the cover (K) to remove it.

- Tighten screws to a torque of 2.0±0.2 N·m.

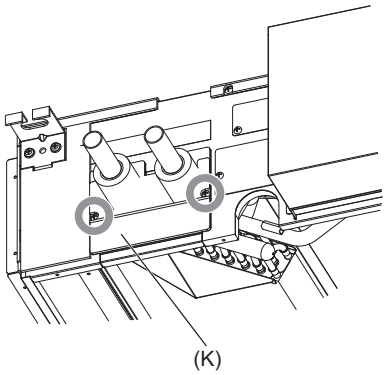

Fig.14

4. Removing the Heat exchanger

(1) Remove the fixing screws on the heat exchanger (L) to remove it.

- Tighten screws to a torque of 2.0±0.2 N·m.

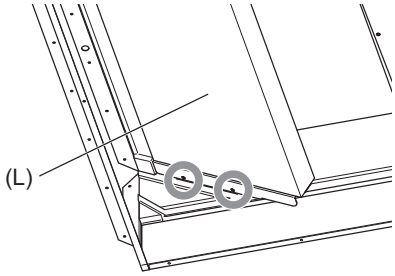

Fig.15

*When performing brazing work, be sure to protect the surrounding components (including insulation materials and refrigerant piping) from fire.

[1] Inspection and maintenance

1. Guideline for preventive maintenance

The following maintenance intervals indicate the estimated intervals of parts replacement and repair to be required as a result of periodic inspections. They do not necessarily mean that replacement is required at the maintenance intervals. The maintenance intervals do not indicate the warranty period.

Parts	Inspection interval	Maintenance interval*
Motor (Fan, drain pump)	1 year	20,000 hours
Bearing		15,000 hours
Electrical box		25,000 hours
Heat exchanger		5 years
Sensor (Thermistor, etc)		5 years
Drain pan		8 years

- The table above shows the main parts. Check the maintenance contract for details.
- This maintenance interval is an estimated period until the day when the maintenance should be conducted to use the product safely for a long time.
  Make use of the table above for maintenance planning (such as planning budget for maintenance inspection cost).
  Depending on the contents of the maintenance contract, the actual inspection and maintenance intervals may shorter than those in the table above.
- The maintenance and inspection items may differ depending on maintenance providers.
  Please check with your maintenance provider when concluding a maintenance contract.

*The following usage conditions are assumed.

- Normal use without frequent START/STOPs (The number of START/STOPs is assumed to be less than 6 times per hour in normal use)
- Operating hours are assumed to be 10 hours per day/2500 hours per year.

When the equipment is used under the following conditions, the maintenance interval may be shortened.

- When equipment is used in an environment where temperature and humidity are high or change dramatically
- When equipment is used in an environment where power supply fluctuations (the distortion of voltage, frequency, and waveform) are large (only within the allowable range)
- When equipment is used in an environment where the equipment may receive vibration or mechanical shock
- When equipment is used in an environment where dust, salt, toxic gases such as sulfur dioxide and hydrogen sulfide, and oil mist are present
- When equipment starts/stops frequently and operates for long periods (24-hour air-conditioning operation)

2. Recommended parts inspection interval

Parts	Inspection interval	Maintenance interval	Inspection items	Criteria	Measures
Long-life filter	1 year	5 years	♦Visual check for dirt or torn.	♦Filter element is seen through. ♦No torn or deformation.	♦Clean the filter if it is dirty. ♦Replace the filter if it is torn.
High-performance filter		1 year	♦Check for clogging. ♦Check the appearance.	♦No notable clogging in a short period of time. ♦No deformation or damage.	♦Replace the filter if it is clogged. ♦Replace the filter if it is deformed or damaged. ♦Replace the filter periodically.
Smoothing capacitor		10 years	♦Check the appearance of electrolytic capacitors.	♦No liquid leakage, deformation, or sleeve (outer film) shrinkage.	Replace the electrolytic capacitor if there is leakage, deformation, or shrinkage of the sleeve (outer film).
Fuse		10 years	♦Check the appearance.	No deformation or discoloration.	♦Replace the fuse if the circuit is cut off.
Motor (Fan, drain pump)		20,000 hours	♦Auditory check for operating sounds. ♦Measure the insulation resistance.	♦No abnormal sounds. ♦Insulation resistance must be 1 MΩ or above.	♦Replace the fan motor if an insulation problem is found.
Bearing		15,000 hours	♦Fill oil periodically.	♦No abnormal sound.	♦Periodically replace the parts.
Electrical box		25,000 hours	♦Check the insulation resistance of the circuit (500 V) ♦Check for loose terminals and connectors.	♦Insulation resistance must be 1 MΩ or above. ♦No loose connections. ♦No accumulated foreign objects. ♦No error display.	♦Clean with a brush if dust accumulation is found. ♦Replace the electrical part if the insulation resistance is 1 MΩ or below. ♦Tighten the loose terminals and reconnect the connectors.
Heat exchanger		5 years	♦Check for clogging, contamination, and damage.	No clogging, contamination, or damage.	Perform cleaning.
Sensor (Thermistor, etc)		5 years	♦Check for breakage and deterioration of the cables, and for disconnection of the connectors. ♦Measure the insulation resistance.	♦No breakage or deterioration of the cables or disconnected connectors. ♦Insulation resistance must be 1 MΩ or above.	Replace the sensor if the cable is broken, short-circuited, or severely deteriorated, or an insulation problem is found.
Drain pan		8 years	♦Check for clogging and drain water flow. ♦Check for coating's peeling or separation.	♦No drain clogging. ♦No abnormal rust or hole.	♦Clean the drain pan and check that the drain pan is tilted properly. ♦Replace the drain pan depending on the repairing coating or conditions.

♦The table above shows the main parts. Check the maintenance contract for details.
♦This maintenance interval is an estimated period until the day when the maintenance should be conducted to use the product safely for a long time.
Make use of the table above for maintenance planning (such as planning budget for parts replacement cost).
♦The inspection intervals depend on the usage and environment.
The inspection intervals do not indicate the warranty period.
♦The maintenance and inspection items may differ depending on maintenance providers. Please check with your maintenance provider when concluding a maintenance contract.
♦Repairs outside the warranty period will be charged, even if periodic inspections have been performed at the recommended intervals.

MITSUBISHI ELECTRIC TRANE HVAC US LLC

HEAD OFFICE: 1340 SATELLITE BLVD, SUWANEE GA 30024 USA

HWE24080

New publication effective May 2025
Specifications subject to change without notice