SERVICE PARTS LIST FOR MITSUBISHI ELECTRIC REFRIGERATION SYSTEMS:CHILLING UNIT

Series : EAHV-M•YCLU(-BS)
EAHV-M•YCLU-N(-BS)

REVISED

June 2026

BWE02602A

INDEX
EAHV-M040YCLU(-BS) EAHV-M040YCLU-N(-BS) EAHV-M050YCLU(-BS) EAHV-M050YCLU-N(-BS)

MITSUBISHI ELECTRIC

Part information update day : **2026-06-01**

Please change the old catalog (issued Mar. 2026, No.BWE026020) to this new catalog.
Content of revision : Some of parts are changed.

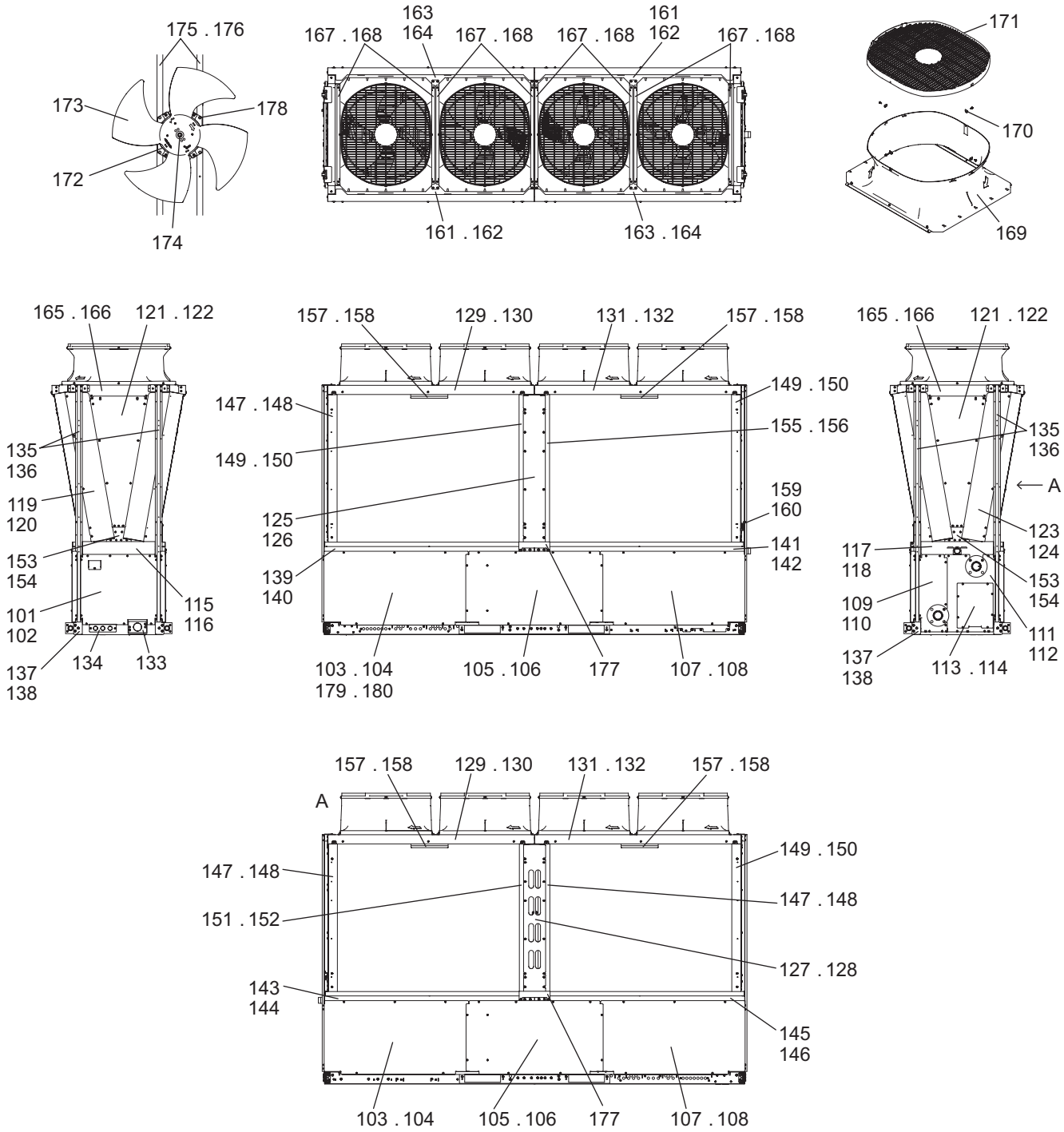
175 . 176
173
178
172
174
163
164
167 . 168
167 . 168
167 . 168
161
162
167 . 168
161 . 162
163 . 164
171
170
169
165 . 166
121 . 122
135
136
119
120
153
154
101
102
115
116
137
138
134
133
157 . 158
129 . 130
131 . 132
157 . 158
147 . 148
149 . 150
149 . 150
155 . 156
125
126
159
160
141
142
139
140
103 . 104
179 . 180
105 . 106
177
107 . 108
165 . 166
121 . 122
135
136
A
123
124
117
118
153
154
109
110
111
112
137
138
113 . 114
157 . 158
129 . 130
131 . 132
157 . 158
A
149 . 150
147 . 148
147 . 148
151 . 152
127 . 128
143
144
145
146
103 . 104
105 . 106
177
107 . 108

No.	Part No.	Part Name	Spec.	EAHV-M040YCLU	EAHV-M040YCLU-BS	EAHV-M050YCLU	EAHV-M050YCLU-BS			Dwg. No.	Notes for the models	Revision info.
101	R15 293 661	Panel assy MF		1		1				KC00J839G03		Chg.
102	R15 294 661	Panel assy MF	BS		1		1			KC00J839G04		Chg.
103	R15 194 661	Panel assy SRL 1		2		2				KW00G747G03		
104	R15 195 661	Panel assy SRL 1	BS		2		2			KW00G747G04		
105	R15 196 661	Panel assy SM		2		2				KW00G749G03		
106	R15 197 661	Panel assy SM	BS		2		2			KW00G749G04		
107	R15 198 661	Panel assy SRL 2		2		2				KW00G748G03		
108	R15 199 661	Panel assy SRL 2	BS		2		2			KW00G748G04		
109	R15 202 661	Panel assy BR		1		1				KW00G363G04		
110	R15 203 661	Panel assy BR	BS		1		1			KW00G363G05		
111	R15 204 661	Panel assy BL		1		1				KW00G358G04		
112	R15 205 661	Panel assy BL	BS		1		1			KW00G358G05		
113	R15 206 661	Panel assy BL 2		1		1				KW00G359G06		
114	R15 207 661	Panel assy BL 2	BS		1		1			KW00G359G07		
115	R15 208 661	Panel assy FT		1		1				KC00U802G01		
116	R15 209 661	Panel assy FT	BS		1		1			KC00U802G02		
117	R15 210 661	Panel assy BT		1		1				KC00U798G01		
118	R15 211 661	Panel assy BT	BS		1		1			KC00U798G02		
119	R15 279 661	Panel assy FL		1		1				KW00F762G01		
120	R15 280 661	Panel assy FL	BS		1		1			KW00F762G02		
121	R15 214 661	Panel assy F		2		2				KW00G679G03		
122	R15 215 661	Panel assy F	BS		2		2			KW00G679G04		
123	R15 281 661	Panel assy FR		1		1				KW00F763G01		
124	R15 282 661	Panel assy FR	BS		1		1			KW00F763G02		
125	R15 228 661	Panel assy SL		1		1				KW00D177G01		
126	R15 229 661	Panel assy SL	BS		1		1			KW00D177G02		
127	R15 230 661	Panel assy SR		1		1				KW00D176G01		
128	R15 231 661	Panel assy SR	BS		1		1			KW00D176G02		
129	R15 222 661	Panel UL		2		2				KC00U984G01		
130	R15 223 661	Panel UL	BS		2		2			KC00U984G02		
131	R15 224 661	Panel UR		2		2				KC00U985G01		
132	R15 225 661	Panel UR	BS		2		2			KC00U985G02		
133	R15 226 661	Base panel	CNT1	1	1	1	1			KC02U341G02		
134	R15 227 661	Base panel	CNT2	1	1	1	1			KC02U364G03		
135	R15 035 626	Pillar		4		4				KW02C132G05		
136	R15 036 626	Pillar	BS		4		4			KW02C132G06		
137	R15 037 626	Pillar MF		2		2				KC02J793G13		
138	R15 038 626	Pillar MF	BS		2		2			KC02J793G14		
139	R15 021 215	Frame MS 1		1		1				KW00G821G03		
140	R15 022 215	Frame MS 1	BS		1		1			KW00G821G04		
141	R15 029 215	Frame MS 2		1		1				KW00G822G05		
142	R15 030 215	Frame MS 2	BS		1		1			KW00G822G06		
143	R15 031 215	Frame MS 3		1		1				KW00G864G07		
144	R15 032 215	Frame MS 3	BS		1		1			KW00G864G08		
145	R15 033 215	Frame MS 4		1		1				KW00G865G05		

No.	Part No.	Part Name	Spec.	EAHV-M040YCLU	EAHV-M040YCLU-BS	EAHV-M050YCLU	EAHV-M050YCLU-BS			Dwg. No.	Notes for the models	Revision info.
146	R15 034 215	Frame MS 4	BS		1		1			KW00G865G06		
147	R15 041 626	Pillar L		3		3				KW02B019G05		
148	R15 042 626	Pillar L	BS		3		3			KW02B019G06		
149	R15 045 626	Pillar R		3		3				KW02B019G07		
150	R15 046 626	Pillar R	BS		3		3			KW02B019G08		
151	R15 047 626	Pillar MR		1		1				KW00G855G01		
152	R15 048 626	Pillar MR	BS		1		1			KW00G855G02		
153	R15 012 318	Frame FB		2		2				KW02G476G02		
154	R15 013 318	Frame FB	BS		2		2			KW02G476G03		
155	R15 049 626	Pillar ML		1		1				KW00G513G05		
156	R15 034 626	Pillar ML	BS		1		1			KW00G513G06		
157	R15 009 383	Stopper assy		4		4				KC00U920G05		
158	R15 010 383	Stopper assy	BS		4		4			KC00U920G06		
159	R15 010 318	Thermistor base assy		1		1				KC00U863G03		
160	R15 011 318	Thermistor base assy	BS		1		1			KC00U863G04		
161	R15 015 215	Fan frame R		2		2				KC02J824G03		
162	R15 016 215	Fan frame R	BS		2		2			KC02J824G04		
163	R15 017 215	Fan frame L		2		2				KC02J825G03		
164	R15 018 215	Fan frame L	BS		2		2			KC02J825G04		
165	R15 019 215	Frame TF		2		2				KW00G507G04		
166	R15 020 215	Frame TF	BS		2		2			KW00G507G05		
167	R18 001 118	Bell mouth support		8		8				KC00S660G03		
168	R18 002 118	Bell mouth support	BS		8		8			KC00S660G02		
169	R61 004 119	Bell mouth		4	4	4	4			KB25A368H04		
170	R61 009 669	Plate fan guard		16	16	16	16			KD02D205H03		
171	R11 003 009	Fan guard		4	4	4	4			KB25V019H04		
172	R15 026 941	Motor	10P 920W 400V	4	4	4	4			KC61J833G02		Chg.
173	R61 047 114	Fan		4	4	4	4			KB25A993H02		
174	R63 4H6 122	Box nut	M12 CH	4	4	4	4			P552000X01		
175	R15 007 318	Base fan		8		8				KW02C337H01		
176	R15 008 318	Base fan	BS		8		8			KW02C337G02		
177	R15 013 671	Frame attachment		2	2	2	2			KW02D214G01		
178	R63 014 087	Upset screw	M6×10	16	16	16	16			P516047X01		
179	R63 006 087	WFT screw	5×12 (30 pieces)	1	1	1	1			KB00H418G01		
180	R61 A45 010	Maintenance coating		1	1	1	1			W872894G05	Not included in the shipment	

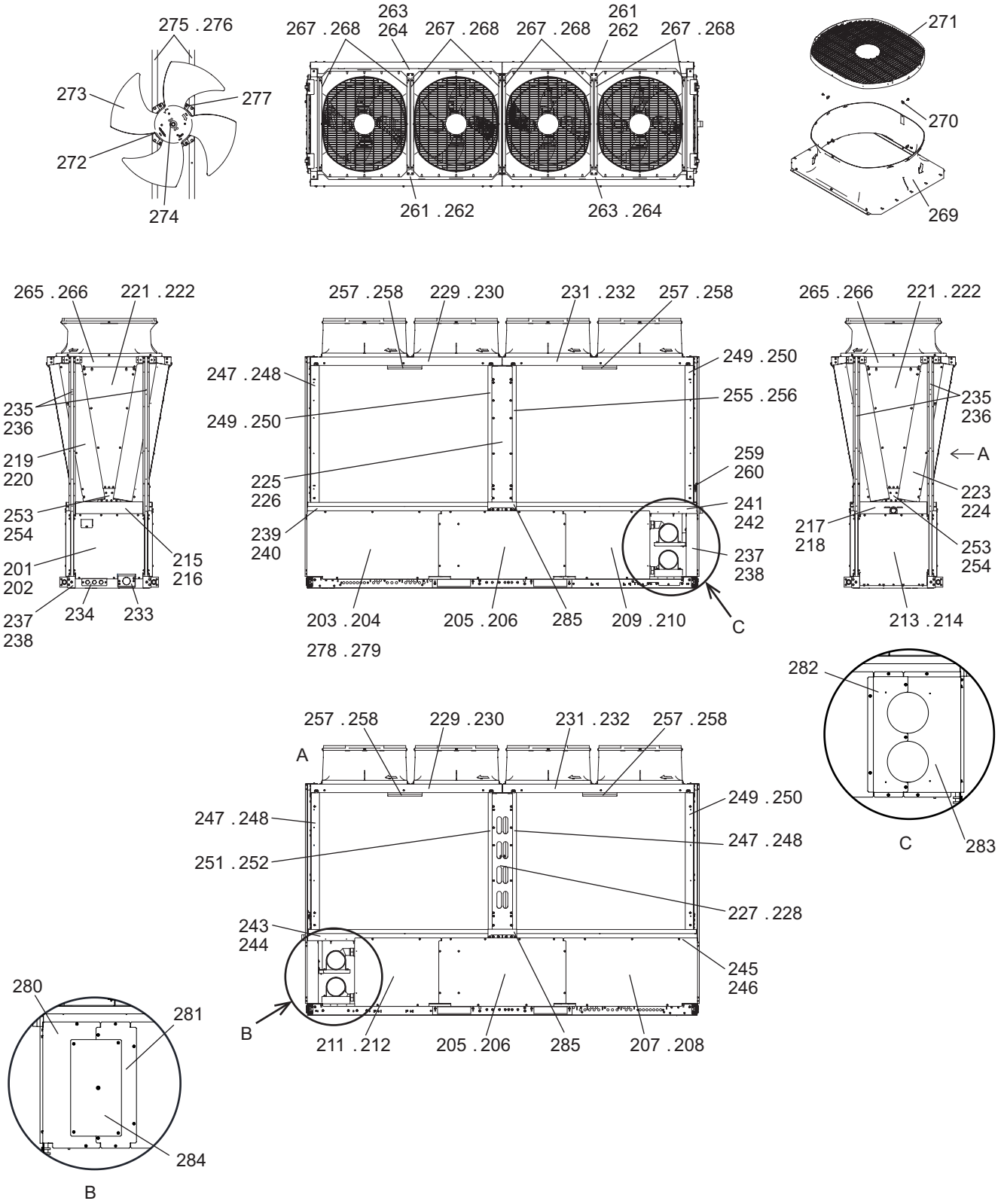
275 . 276
273
277
272
274
263
264
267 . 268
267 . 268
267 . 268
261
262
267 . 268
261 . 262
263 . 264
271
270
269
265 . 266
221 . 222
235
236
219
220
253
254
201
202
237
238
234
233
215
216
257 . 258
229 . 230
231 . 232
257 . 258
247 . 248
249 . 250
249 . 250
255 . 256
225
226
239
240
259
260
241
242
237
238
203 . 204
278 . 279
205 . 206
285
209 . 210
C
265 . 266
221 . 222
235
236
A
223
224
217
218
253
254
213 . 214
282
C
283
257 . 258
229 . 230
231 . 232
257 . 258
A
247 . 248
249 . 250
251 . 252
247 . 248
227 . 228
243
244
245
246
B
211 . 212
205 . 206
285
207 . 208
280
281
284
B

No.	Part No.	Part Name	Spec.	EAHV-M040YCLU-N	EAHV-M040YCLU-N-BS	EAHV-M050YCLU-N	EAHV-M050YCLU-N-BS			Dwg. No.	Notes for the models	Revision info.
201	R15 293 661	Panel assy MF		1		1				KC00J839G03		Chg.
202	R15 294 661	Panel assy MF	BS		1		1			KC00J839G04		Chg.
203	R15 194 661	Panel assy SRL 1		1		1				KW00G747G03		
204	R15 195 661	Panel assy SRL 1	BS		1		1			KW00G747G04		
205	R15 196 661	Panel assy SM		2		2				KW00G749G03		
206	R15 197 661	Panel assy SM	BS		2		2			KW00G749G04		
207	R15 198 661	Panel assy SRL 2		1		1				KW00G748G03		
208	R15 199 661	Panel assy SRL 2	BS		1		1			KW00G748G04		
209	R15 186 661	Panel assy SR H		1		1				KW00G826G01		
210	R15 187 661	Panel assy SR H	BS		1		1			KW00G826G02		
211	R15 188 661	Panel assy SL H		1		1				KW00G827G01		
212	R15 189 661	Panel assy SL H	BS		1		1			KW00G827G02		
213	R15 190 661	Panel assy B H		1		1				KW00G828G01		
214	R15 191 661	Panel assy B H	BS		1		1			KW00G828G02		
215	R15 208 661	Panel assy FT		1		1				KC00U802G01		
216	R15 209 661	Panel assy FT	BS		1		1			KC00U802G02		
217	R15 210 661	Panel assy BT		1		1				KC00U798G01		
218	R15 211 661	Panel assy BT	BS		1		1			KC00U798G02		
219	R15 279 661	Panel assy FL		1		1				KW00F762G01		
220	R15 280 661	Panel assy FL	BS		1		1			KW00F762G02		
221	R15 214 661	Panel assy F		2		2				KW00G679G03		
222	R15 215 661	Panel assy F	BS		2		2			KW00G679G04		
223	R15 281 661	Panel assy FR		1		1				KW00F763G01		
224	R15 282 661	Panel assy FR	BS		1		1			KW00F763G02		
225	R15 228 661	Panel assy SL		1		1				KW00D177G01		
226	R15 229 661	Panel assy SL	BS		1		1			KW00D177G02		
227	R15 230 661	Panel assy SR		1		1				KW00D176G01		
228	R15 231 661	Panel assy SR	BS		1		1			KW00D176G02		
229	R15 222 661	Panel UL		2		2				KC00U984G01		
230	R15 223 661	Panel UL	BS		2		2			KC00U984G02		
231	R15 224 661	Panel UR		2		2				KC00U985G01		
232	R15 225 661	Panel UR	BS		2		2			KC00U985G02		
233	R15 226 661	Base panel	CNT1	1	1	1	1			KC02U341G02		
234	R15 227 661	Base panel	CNT2	1	1	1	1			KC02U364G03		
235	R15 035 626	Pillar		4		4				KW02C132G05		
236	R15 036 626	Pillar	BS		4		4			KW02C132G06		
237	R15 037 626	Pillar MF		2		2				KC02J793G13		
238	R15 038 626	Pillar MF	BS		2		2			KC02J793G14		
239	R15 021 215	Frame MS 1		1		1				KW00G821G03		
240	R15 022 215	Frame MS 1	BS		1		1			KW00G821G04		
241	R15 029 215	Frame MS 2		1		1				KW00G822G05		
242	R15 030 215	Frame MS 2	BS		1		1			KW00G822G06		
243	R15 031 215	Frame MS 3		1		1				KW00G864G07		
244	R15 032 215	Frame MS 3	BS		1		1			KW00G864G08		
245	R15 033 215	Frame MS 4		1		1				KW00G865G05		

No.	Part No.	Part Name	Spec.	EAHV-M040YCLU-N	EAHV-M040YCLU-N-BS	EAHV-M050YCLU-N	EAHV-M050YCLU-N-BS			Dwg. No.	Notes for the models	Revision info.
246	R15 034 215	Frame MS 4	BS		1		1			KW00G865G06		
247	R15 041 626	Pillar L		3		3				KW02B019G05		
248	R15 042 626	Pillar L	BS		3		3			KW02B019G06		
249	R15 045 626	Pillar R		3		3				KW02B019G07		
250	R15 046 626	Pillar R	BS		3		3			KW02B019G08		
251	R15 047 626	Pillar MR		1		1				KW00G855G01		
252	R15 048 626	Pillar MR	BS		1		1			KW00G855G02		
253	R15 012 318	Frame FB		2		2				KW02G476G02		
254	R15 013 318	Frame FB	BS		2		2			KW02G476G03		
255	R15 049 626	Pillar ML		1		1				KW00G513G05		
256	R15 034 626	Pillar ML	BS		1		1			KW00G513G06		
257	R15 009 383	Stopper assy		4		4				KC00U920G05		
258	R15 010 383	Stopper assy	BS		4		4			KC00U920G06		
259	R15 010 318	Thermistor base assy		1		1				KC00U863G03		
260	R15 011 318	Thermistor base assy	BS		1		1			KC00U863G04		
261	R15 015 215	Fan frame R		2		2				KC02J824G03		
262	R15 016 215	Fan frame R	BS		2		2			KC02J824G04		
263	R15 017 215	Fan frame L		2		2				KC02J825G03		
264	R15 018 215	Fan frame L	BS		2		2			KC02J825G04		
265	R15 019 215	Frame TF		2		2				KW00G507G04		
266	R15 020 215	Frame TF	BS		2		2			KW00G507G05		
267	R18 001 118	Bell mouth support		8		8				KC00S660G03		
268	R18 002 118	Bell mouth support	BS		8		8			KC00S660G02		
269	R61 004 119	Bell mouth		4	4	4	4			KB25A368H04		
270	R61 009 669	Plate fan guard		16	16	16	16			KD02D205H03		
271	R11 003 009	Fan guard		4	4	4	4			KB25V019H04		
272	R15 026 941	Motor	10P 920W 400V	4	4	4	4			KC61J833G02		Chg.
273	R61 047 114	Fan		4	4	4	4			KB25A993H02		
274	R63 4H6 122	Box nut	M12 CH	4	4	4	4			P552000X01		
275	R15 007 318	Base fan		8		8				KW02C337H01		
276	R15 008 318	Base fan	BS		8		8			KW02C337G02		
277	R63 014 087	Upset screw	M6×10	16	16	16	16			P516047X01		
278	R63 006 087	WFT screw	5×12 (30 pieces)	1	1	1	1			KB00H418G01		
279	R61 A45 010	Maintenance coating		1	1	1	1			W872894G05	Not included in the shipment	
280	R15 232 661	Panel SL H 2 assy		1	1	1	1			KW00G846G02		
281	R15 233 661	Panel SL H 3 assy		1	1	1	1			KW00D215G01		
282	R15 234 661	Panel SR H 3 assy		1	1	1	1			KW00G843G02		
283	R15 235 661	Panel SL H 4 assy		1	1	1	1			KW00D216G01		
284	R15 236 661	Panel side N assy		1	1	1	1			KW00G901G02		
285	R15 013 671	Frame attachment		2	2	2	2			KW02D214G01		

FUNCTIONAL PARTS

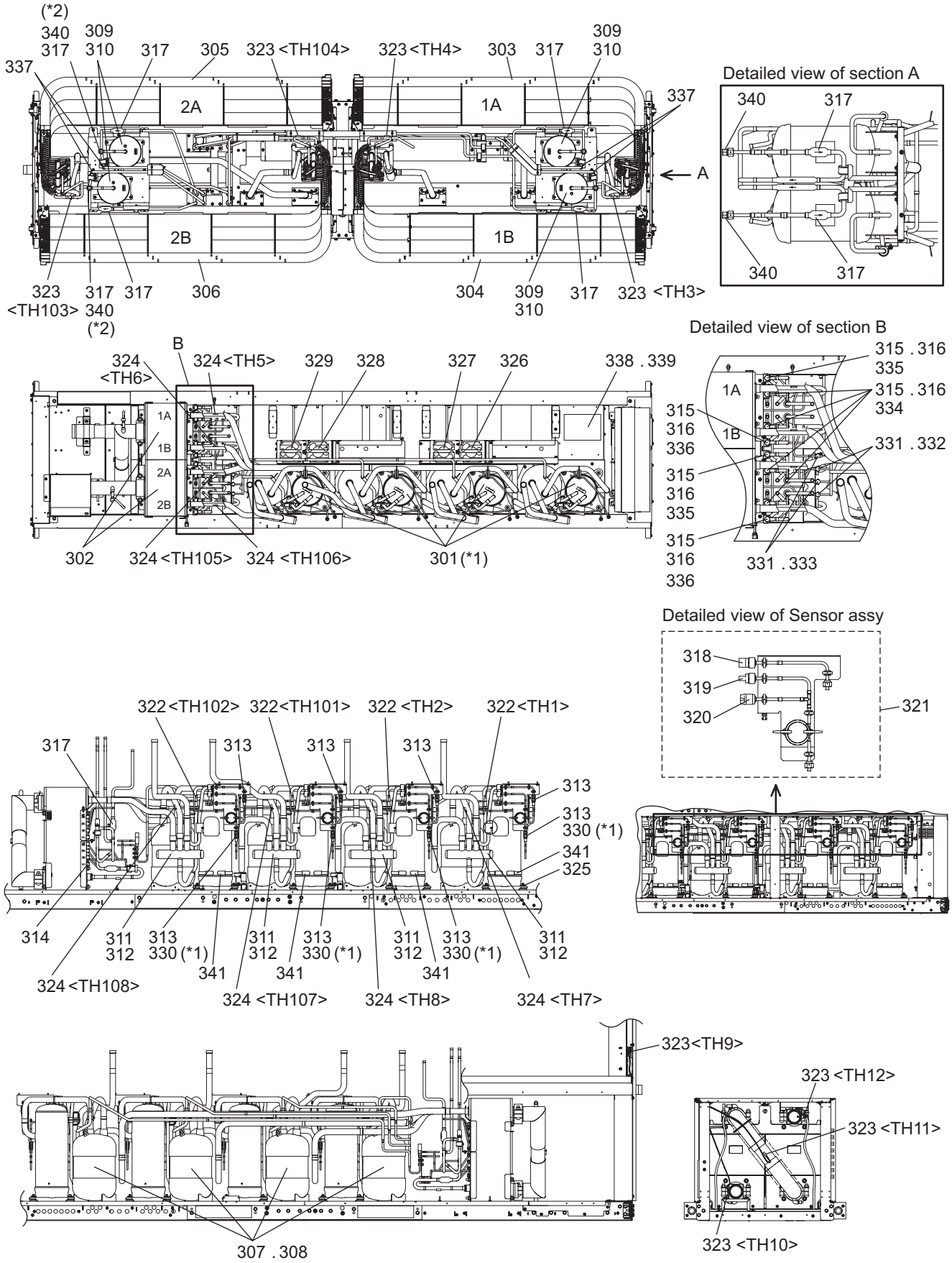

*1 When replacing part 301 (Compressor), also replace part 330 (Pipe check joint).
*2 For details, see Section A.

EAHV-M040,M050YCLU(-BS)
EAHV-M040,M050YCLU-N(-BS)

FUNCTIONAL PARTS

No.	Part No.	Part Name	Spec.	EAHV-M040YCLU	EAHV-M040YCLU-BS	EAHV-M050YCLU	EAHV-M050YCLU-BS	EAHV-M040YCLU-N	EAHV-M040YCLU-N-BS	Dwg. No.	Notes for the models	Revision info.
301	R15 017 478	Compressor	HVK94FC-YEN	4	4	4	4	4	4	EP10218B11	*1	
302	R15 034 105	Water side HEX assy		2	2	2	2	2	2	KW00G911G01		
303	R15 037 105	Heat exchanger	1A	1	1	1	1	1	1	KW00G779G05		
304	R15 038 105	Heat exchanger	1B	1	1	1	1	1	1	KW00G780G04		
305	R15 039 105	Heat exchanger	2A	1	1	1	1	1	1	KW00G781G05		
306	R15 040 105	Heat exchanger	2B	1	1	1	1	1	1	KW00G782G04		
307	R15 035 110	Accumulator	40-60HP	4		4		4		KC00J795G33		
308	R15 036 110	Accumulator	40-60HP BS		4		4		4	KC00J795G34		
309	R15 023 110	Receiver		4		4		4		KC00J780G15		
310	R15 024 110	Receiver	BS		4		4		4	KC00J780G16		
311	R15 007 150	Four way valve		4	4	4	4	4	4	P631347X01		
312	R15 002 920	Four way valve coil		4	4	4	4	4	4	KC50L674H01		
313	R15 002 904	Check joint S		8	8	8	8	8	8	P666014X01		
314	R15 005 904	Check joint		8	8	8	8	8	8	P666025X01		
315	R63 045 401	Linear expansion valve		8	8	8	8	8	8	P632540X01		
316	R15 017 920	Linear expansion valve coil		8	8	8	8	8	8	P472104X02		
317	R15 001 454	Strainer		16	16	16	16	16	16	W882827G02	*2	
318	R15 015 936	Low pressure sensor		4	4	4	4	4	4	KC78P281G02		
319	R15 016 936	High pressure sensor		4	4	4	4	4	4	P418181X01		
320	R15 006 935	Pressure switch		4	4	4	4	4	4	P426337X02		
321	R15 017 936	Sensor assy		4	4	4	4	4	4	KW80G913G03		
322	R61 396 200	Thermistor		4	4	4	4	4	4	P425416X02	<TH1,2,101,102>	
323	R15 002 200	Thermistor		8	8	8	8	8	8	P418177X01	<TH3,4,9～12,103,104>	
324	R61 280 200	Thermistor		8	8	8	8	8	8	P418144X01	<TH5～8,105～108>	
325	R63 852 860	Rubber mount		16	16	16	16	16	16	W897574H01		
326	R15 019 941	Fan motor 1		1	1	1	1	1	1	KC78U983G07		
327	R15 020 941	Fan motor 2		1	1	1	1	1	1	KC78U983G08		
328	R15 021 941	Fan motor 3		1	1	1	1	1	1	KC78U983G09		
329	R15 022 941	Fan motor 4		1	1	1	1	1	1	KC78U983G10		
330	R15 004 904	Pipe check joint		4	4	4	4	4	4	KW00D174G01	*1	
331	R15 010 920	Linear expansion valve		4	4	4	4	4	4	P631348X01	For injection	
332	R61 120 401	Linear expansion valve coil	CAM L2500 BLACK	2	2	2	2	2	2	P472131X01	INJ1A,2A	
333	R61 131 401	Linear expansion valve coil	CAM L2500 GREEN	2	2	2	2	2	2	P472114X01	INJ1B,2B	
334	R15 013 675	LEV pipe assy		4	4	4	4	4	4	KW00D200G01		
335	R15 014 675	LEV pipe assy		2	2	2	2	2	2	KW00D201G01		
336	R15 015 675	LEV pipe assy		2	2	2	2	2	2	KW00D202G01		
337	R11 008 904	Check valve	YCV8-4GMD-1	4	4	4	4	4	4	P639212X01		
338	R15 009 938	Transformer box		1		1		1		KW00C134G28		
339	R15 010 938	Transformer box	BS		1		1		1	KW00C134G29		
340	R12 001 902	Fusible plug		4	4	4	4	4	4	P649027X01	*2	
341	R63 Y07 237	Belt heater	240V 45W	4	4	4	4	4	4	P493781X02		

FUNCTIONAL PARTS

No.	Part No.	Part Name	Spec.	EAHV-M050YCLU-N	EAHV-M050YCLU-N-BS					Dwg. No.	Notes for the models	Revision info.
301	R15 017 478	Compressor	HVK94FC-YEN	4	4					EP10218B11	*1	
302	R15 034 105	Water side HEX assy		2	2					KW00G911G01		
303	R15 037 105	Heat exchanger	1A	1	1					KW00G779G05		
304	R15 038 105	Heat exchanger	1B	1	1					KW00G780G04		
305	R15 039 105	Heat exchanger	2A	1	1					KW00G781G05		
306	R15 040 105	Heat exchanger	2B	1	1					KW00G782G04		
307	R15 035 110	Accumulator	40-60HP	4						KC00J795G33		
308	R15 036 110	Accumulator	40-60HP BS		4					KC00J795G34		
309	R15 023 110	Receiver		4						KC00J780G15		
310	R15 024 110	Receiver	BS		4					KC00J780G16		
311	R15 007 150	Four way valve		4	4					P631347X01		
312	R15 002 920	Four way valve coil		4	4					KC50L674H01		
313	R15 002 904	Check joint S		8	8					P666014X01		
314	R15 005 904	Check joint		8	8					P666025X01		
315	R63 045 401	Linear expansion valve		8	8					P632540X01		
316	R15 017 920	Linear expansion valve coil		8	8					P472104X02		
317	R15 001 454	Strainer		16	16					W882827G02	*2	
318	R15 015 936	Low pressure sensor		4	4					KC78P281G02		
319	R15 016 936	High pressure sensor		4	4					P418181X01		
320	R15 006 935	Pressure switch		4	4					P426337X02		
321	R15 017 936	Sensor assy		4	4					KW80G913G03		
322	R61 396 200	Thermistor		4	4					P425416X02	<TH1,2,101,102>	
323	R15 002 200	Thermistor		8	8					P418177X01	<TH3,4,9～12,103,104>	
324	R61 280 200	Thermistor		8	8					P418144X01	<TH5～8,105～108>	
325	R63 852 860	Rubber mount		16	16					W897574H01		
326	R15 019 941	Fan motor 1		1	1					KC78U983G07		
327	R15 020 941	Fan motor 2		1	1					KC78U983G08		
328	R15 021 941	Fan motor 3		1	1					KC78U983G09		
329	R15 022 941	Fan motor 4		1	1					KC78U983G10		
330	R15 004 904	Pipe check joint		4	4					KW00D174G01	*1	
331	R15 010 920	Linear expansion valve		4	4					P631348X01	For injection	
332	R61 120 401	Linear expansion valve coil	CAM L2500 BLACK	2	2					P472131X01	INJ1A,2A	
333	R61 131 401	Linear expansion valve coil	CAM L2500 GREEN	2	2					P472114X01	INJ1B,2B	
334	R15 013 675	LEV pipe assy		4	4					KW00D200G01		
335	R15 014 675	LEV pipe assy		2	2					KW00D201G01		
336	R15 015 675	LEV pipe assy		2	2					KW00D202G01		
337	R11 008 904	Check valve	YCV8-4GMD-1	4	4					P639212X01		
338	R15 009 938	Transformer box		1						KW00C134G28		
339	R15 010 938	Transformer box	BS		1					KW00C134G29		
340	R12 001 902	Fusible plug		4	4					P649027X01	*2	
341	R63 Y07 237	Belt heater	240V 45W	4	4					P493781X02		

WATER PIPE PARTS (1)

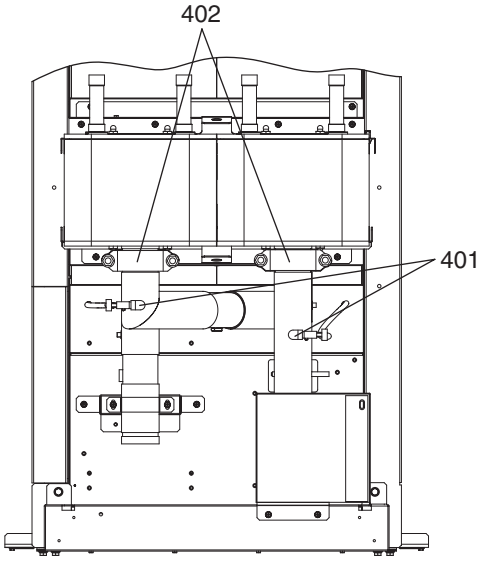

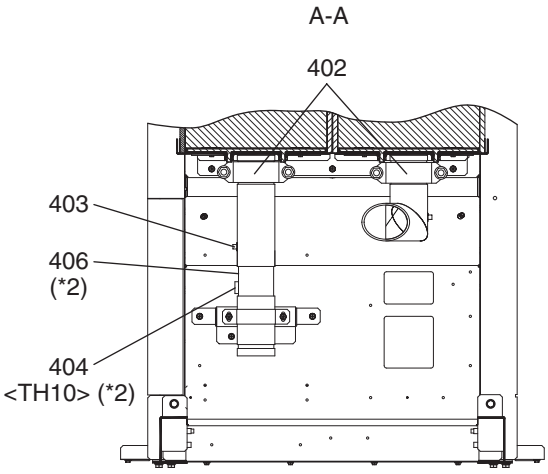

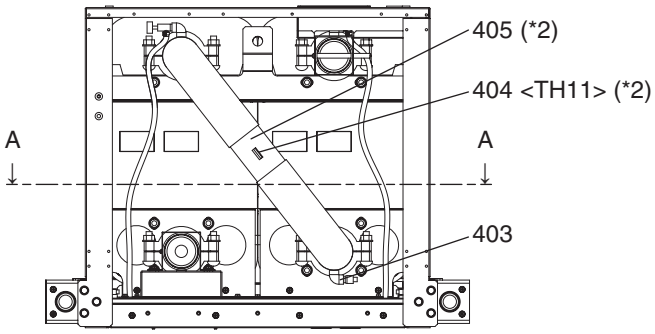

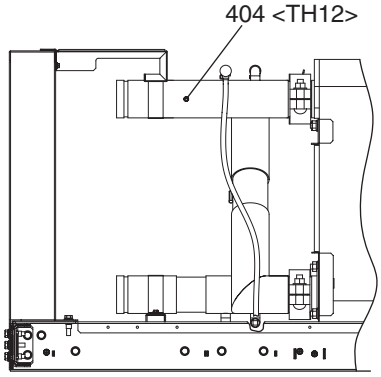

*2 When replacing part 404 (Thermistor <TH10>), also replace part 406 (Insulator).
When replacing part 404 (Thermistor <TH11>), also replace part 405 (Insulator).

EAHV-M040,M050YCLU(-BS) WATER PIPE PARTS (1)

No.	Part No.	Part Name	Spec.	EAHV-M040YCLU	EAHV-M040YCLU-BS	EAHV-M050YCLU	EAHV-M050YCLU-BS			Dwg. No.	Notes for the models	Revision info.
401	R15 002 171	Air purge valve		2	2	2	2			KC11L644H01		
402	R15 007 040	Housing joint	65A	4	4	4	4			P669007X03		
403	R15 004 468	Plug	1/4	2	2	2	2			KC11U818H01		
404	R15 002 200	Thermistor	PXM-41E-M105-02Y	3	3	3	3			P418177X01	<TH10～12>*2	
405	R15 002 014	Insulator		1	1	1	1			KC33U954H02	*2	
406	R15 006 014	Insulator		1	1	1	1			KC33U954H03	*2	

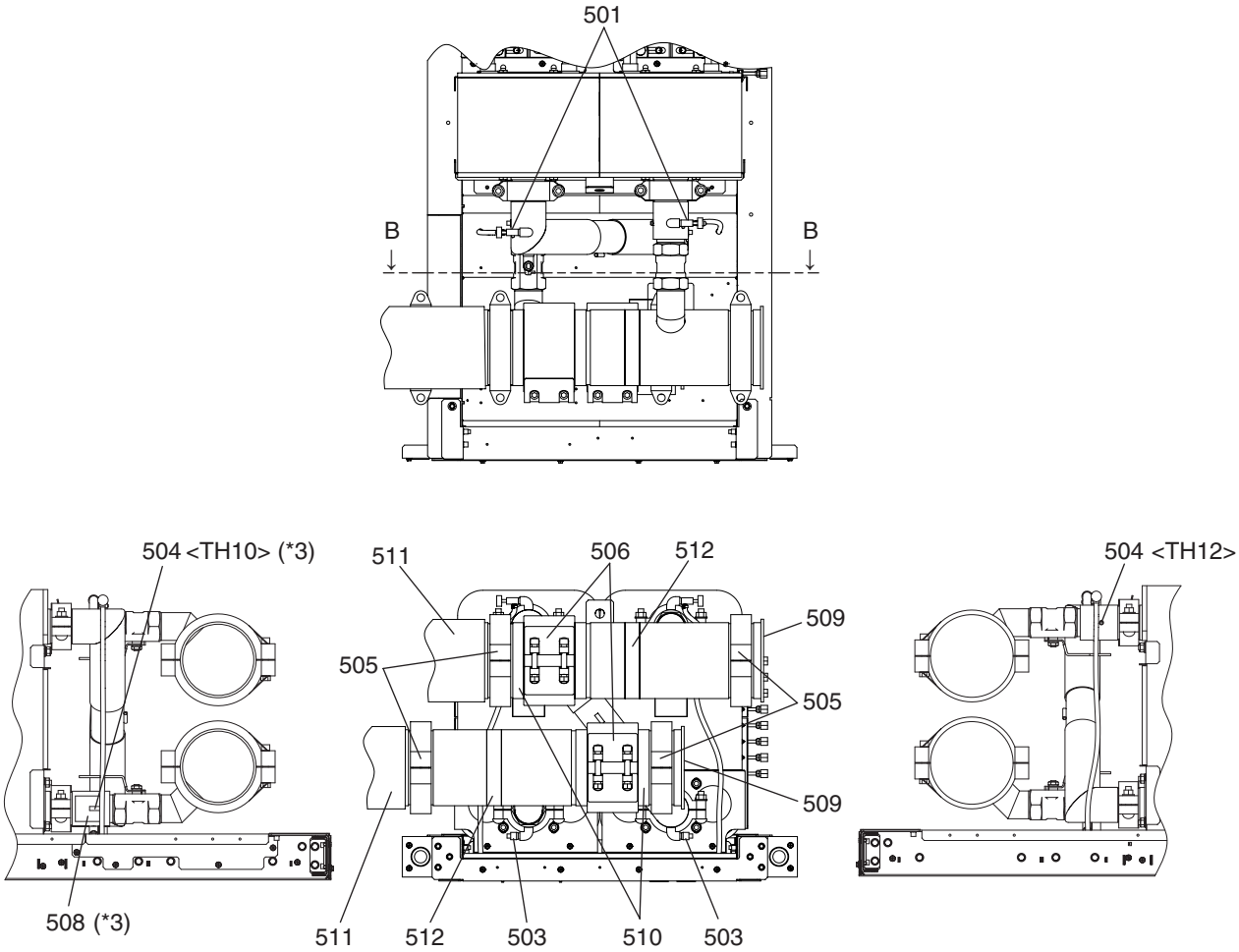

B-B

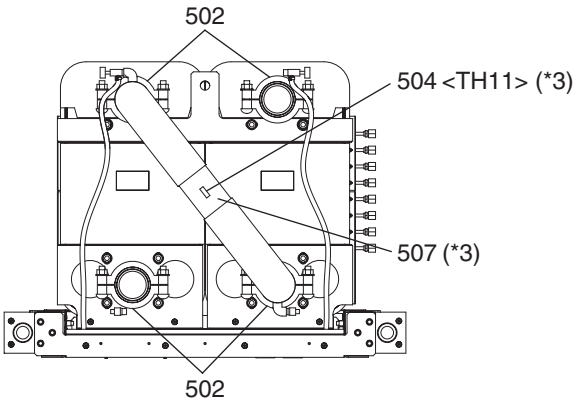

*3 When replacing part 504 (Thermistor <TH10>), also replace part 508 (Insulator).
When replacing part 504 (Thermistor <TH11>), also replace part 507 (Insulator).

No.	Part No.	Part Name	Spec.	EAHV-M040YCLU-N	EAHV-M040YCLU-N-BS	EAHV-M050YCLU-N	EAHV-M050YCLU-N-BS			Dwg. No.	Notes for the models	Revision info.
501	R15 002 171	Air purge valve		2	2	2	2			KC11L644H01		
502	R15 007 040	Housing joint	65A	4	4	4	4			P669007X03		
503	R15 004 468	Plug	1/4	2	2	2	2			KC11U818H01		
504	R15 002 200	Thermistor	PXM-41E-M105-02Y	3	3	3	3			P418177X01	<TH10～12> *3	
505	R15 008 040	Housing joint	G-0-150A	4	4	4	4			P669008X02		
506	R15 009 040	Housing joint	GXB-150E	2	2	2	2			P669009X01		
507	R15 002 014	Insulator		1	1	1	1			KC33U954H02	*3	
508	R15 007 014	Insulator		1	1	1	1			KW00D655G01	*3	
509	R15 012 486	Pipe W assy end		2	2	2	2			KC00P677G01		
510	R15 013 486	Pipe W head con 1		2	2	2	2			KC16P674H02		
511	R15 014 486	Pipe W assy		2	2	2	2			KW00D163G01		
512	R15 003 223	Saddle	150A SUS	2	2	2	2			KC05P853H03		

CONTROL BOX PARTS

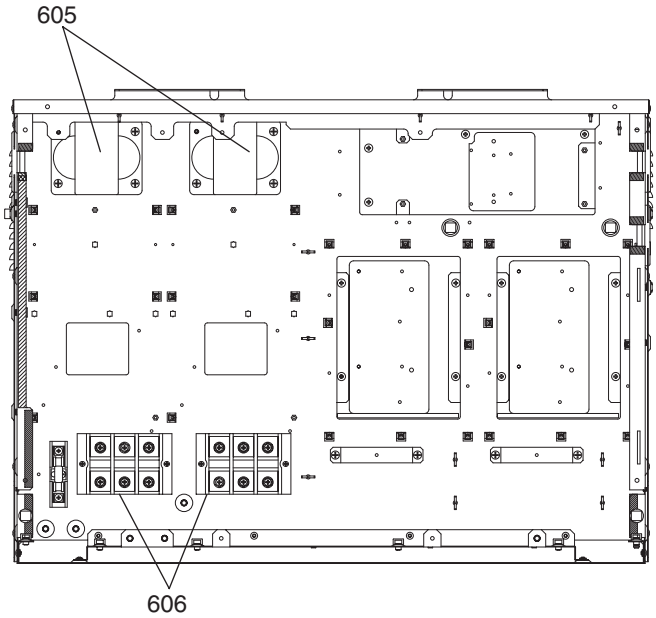

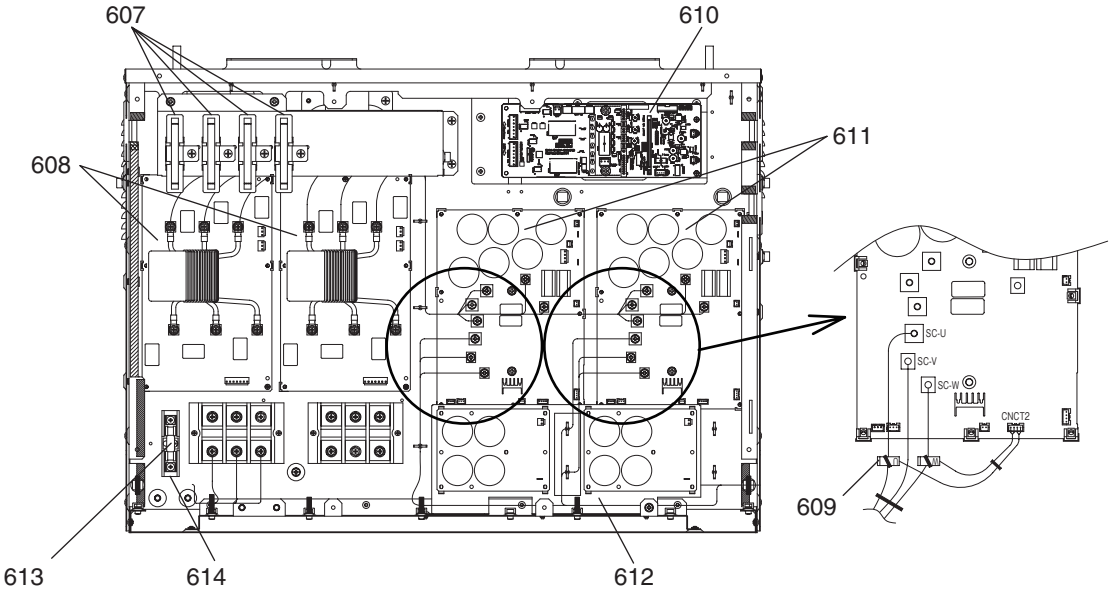

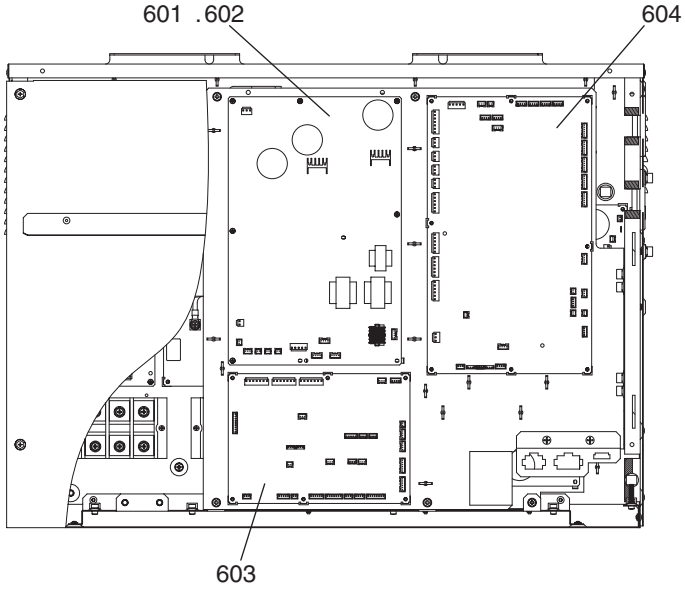

CONTROL BOX PARTS

No.	Part No.	Part Name	Spec.	EAHV-M040YCLU	EAHV-M040YCLU-BS	EAHV-M050YCLU	EAHV-M050YCLU-BS	EAHV-M040YCLU-N	EAHV-M040YCLU-N-BS	Dwg. No.	Notes for the models	Revision info.
601	R15 077 937	Transmission board	PS APPA-150A3 B	1	1	1	1	1	1	KE80G590G08		
602	R15 078 937	Transmission board	PS APPA-150A3 F	1	1	1	1	1	1	KE80G590G09		
603	R15 053 937	Expansion board	IO-CONT	2	2	2	2	2	2	KE80L096G01		
604	R15 054 937	Control board	M12-DB	2	2	2	2	2	2	KE80L095G01		
605	R15 009 966	Reactor	REACTOR 34A 2.2MH	4	4	4	4	4	4	KR65C240H03		
606	R61 N22 246	Terminal table	TB HP-T3013-10-3P	4	4	4	4	4	4	S436005H02		
607	R61 001 234	Resistor	MFS40A220KI	8	8	8	8	8	8	P411151X01		
608	R15 085 937	Noise filter		4	4	4	4	4	4	KE80G598G12		
609	R61 015 287	Current sensor	13KMD	4	4	4	4	4	4	P418087X01		
610	R15 086 937	Fan inverter board	INV/S29	2	2	2	2	2	2	KE80L097G08		
611	R15 087 937	Inverter board	INV42Y	4	4	4	4	4	4	KE80G592G13		
612	R15 065 937	Capacitor board	CAP06Y	4	4	4	4	4	4	KE80G594G05		
613	R61 035 239	Fuse	K6F	2	2	2	2	2	2	KR75C706H01		
614	R61 007 241	Fuse holder	HP-F2028-1	2	2	2	2	2	2	KR75C634H01		

CONTROL BOX PARTS

No.	Part No.	Part Name	Spec.	EAHV-M050YCLU-N	EAHV-M050YCLU-N-BS					Dwg. No.	Notes for the models	Revision info.
601	R15 077 937	Transmission board	PS APPA-150A3 B	1	1					KE80G590G08		
602	R15 078 937	Transmission board	PS APPA-150A3 F	1	1					KE80G590G09		
603	R15 053 937	Expansion board	IO-CONT	2	2					KE80L096G01		
604	R15 054 937	Control board	M12-DB	2	2					KE80L095G01		
605	R15 009 966	Reactor	REACTOR 34A 2.2MH	4	4					KR65C240H03		
606	R61 N22 246	Terminal table	TB HP-T3013-10-3P	4	4					S436005H02		
607	R61 001 234	Resistor	MFS40A220KI	8	8					P411151X01		
608	R15 085 937	Noise filter		4	4					KE80G598G12		
609	R61 015 287	Current sensor	13KMD	4	4					P418087X01		
610	R15 086 937	Fan inverter board	INV/S29	2	2					KE80L097G08		
611	R15 087 937	Inverter board	INV42Y	4	4					KE80G592G13		
612	R15 065 937	Capacitor board	CAP06Y	4	4					KE80G594G05		
613	R61 035 239	Fuse	K6F	2	2					KR75C706H01		
614	R61 007 241	Fuse holder	HP-F2028-1	2	2					KR75C634H01		

ELECTRIC BOX PARTS

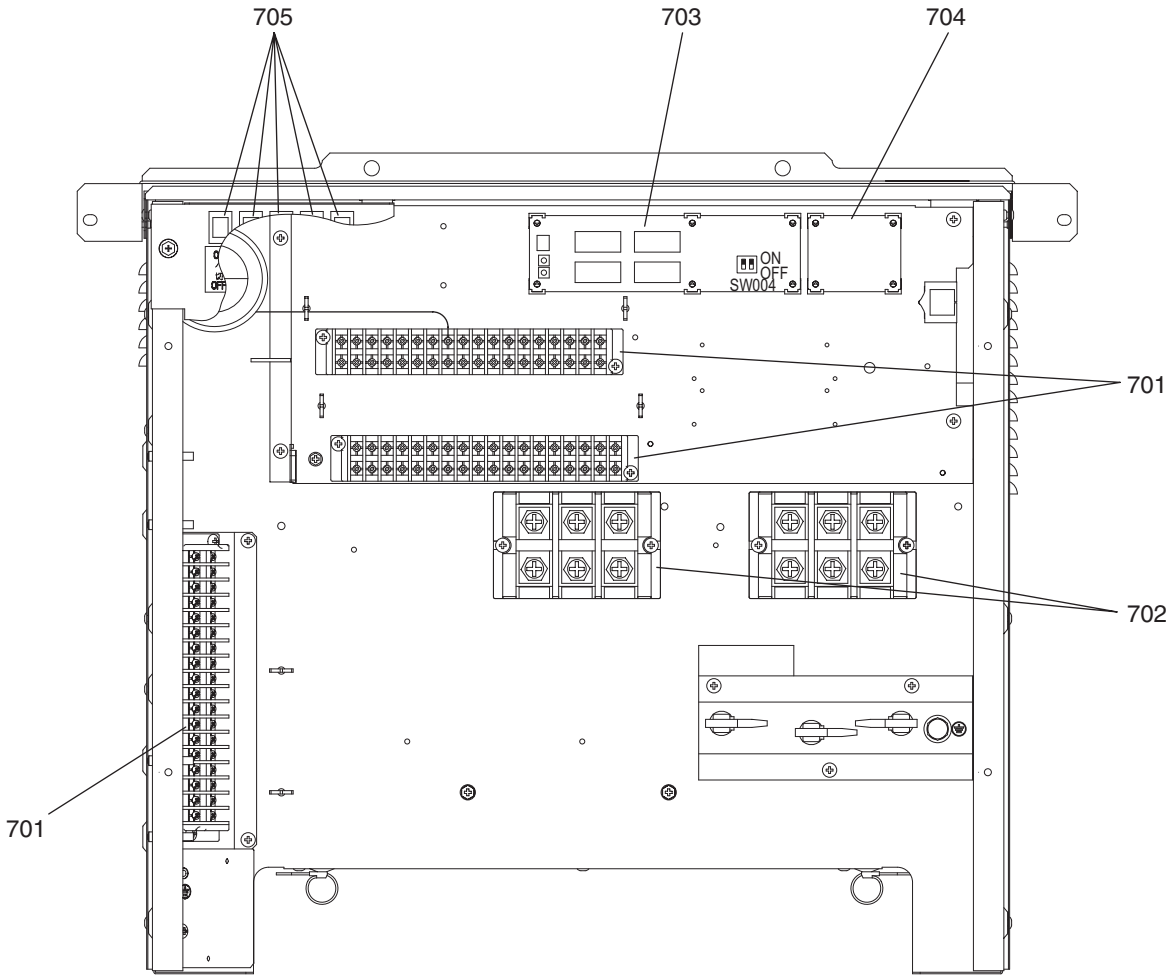

ELECTRIC BOX PARTS

No.	Part No.	Part Name	Spec.	EAHV-M040YCLU	EAHV-M040YCLU-BS	EAHV-M050YCLU	EAHV-M050YCLU-BS	EAHV-M040YCLU-N	EAHV-M040YCLU-N-BS	Dwg. No.	Notes for the models	Revision info.
701	R12 002 587	Terminal block	HP-T3020-31-18PL0	3	3	3	3	3	3	S436005H16		
702	R15 014 587	Terminal block	JX0-T3013-3P CSET	2	2	2	2	2	2	S436007H03		
703	R15 076 937	DSP board	CC-DSP	1	1	1	1	1	1	KE80G854G02		
704	R15 048 937	CONV board	CC-CONV	1	1	1	1	1	1	KE80G853G01		
705	R15 001 965	Switch	SLE10A2-6-32	5	5	5	5	5	5	P422878X01		

ELECTRIC BOX PARTS

No.	Part No.	Part Name	Spec.	EAHV-M050YCLU-N	EAHV-M050YCLU-N-BS					Dwg. No.	Notes for the models	Revision info.
701	R12 002 587	Terminal block	HP-T3020-31-18PL0	3	3					S436005H16		
702	R15 014 587	Terminal block	JX0-T3013-3P CSET	2	2					S436007H03		
703	R15 076 937	DSP board	CC-DSP	1	1					KE80G854G02		
704	R15 048 937	CONV board	CC-CONV	1	1					KE80G853G01		
705	R15 001 965	Switch	SLE10A2-6-32	5	5					P422878X01		

MITSUBISHI ELECTRIC CORPORATION

BWE02602A(20260630)