SERVICE PARTS LIST FOR MITSUBISHI ELECTRIC PACKAGED AIR-CONDITIONERS

Series : PQRY-M•TXU-A
PQRY-M•YXU-A

For use with the R32

REVISED
June 2026
BWE02547A

INDEX
PQRY-M72TXU-A
PQRY-M96TXU-A
PQRY-M120TXU-A
PQRY-M144TXU-A
PQRY-M168TXU-A
PQRY-M192TXU-A
PQRY-M216TXU-A
PQRY-M240TXU-A
PQRY-M72YXU-A
PQRY-M96YXU-A
PQRY-M120YXU-A
PQRY-M144YXU-A
PQRY-M168YXU-A
PQRY-M192YXU-A
PQRY-M216YXU-A
PQRY-M240YXU-A

MITSUBISHI ELECTRIC

Part information update day : **2026-06-11**

Please change the old catalog (issued Dec. 2025, No.BWE025470) to this new catalog.
Content of revision : Some of parts are changed.

The Package name list

PQRY-M144TSXU-A【PQRY-M72TXU-A＋PQRY-M72TXU-A】
PQRY-M168TSXU-A【PQRY-M72TXU-A＋PQRY-M96TXU-A】
PQRY-M192TSXU-A【PQRY-M96TXU-A＋PQRY-M96TXU-A】
PQRY-M216TSXU-A【PQRY-M96TXU-A＋PQRY-M120TXU-A】
PQRY-M240TSXU-A【PQRY-M120TXU-A＋PQRY-M120TXU-A】
PQRY-M288TSXU-A【PQRY-M144TXU-A＋PQRY-M144TXU-A】
PQRY-M312TSXU-A【PQRY-M144TXU-A＋PQRY-M168TXU-A】
PQRY-M336TSXU-A【PQRY-M168TXU-A＋PQRY-M168TXU-A】
PQRY-M144YSXU-A【PQRY-M72YXU-A＋PQRY-M72YXU-A】
PQRY-M168YSXU-A【PQRY-M72YXU-A＋PQRY-M96YXU-A】
PQRY-M192YSXU-A【PQRY-M96YXU-A＋PQRY-M96YXU-A】
PQRY-M216YSXU-A【PQRY-M96YXU-A＋PQRY-M120YXU-A】
PQRY-M240YSXU-A【PQRY-M120YXU-A＋PQRY-M120YXU-A】
PQRY-M288YSXU-A【PQRY-M144YXU-A＋PQRY-M144YXU-A】
PQRY-M312YSXU-A【PQRY-M144YXU-A＋PQRY-M168YXU-A】
PQRY-M336YSXU-A【PQRY-M168YXU-A＋PQRY-M168YXU-A】

EXTERNAL PARTS

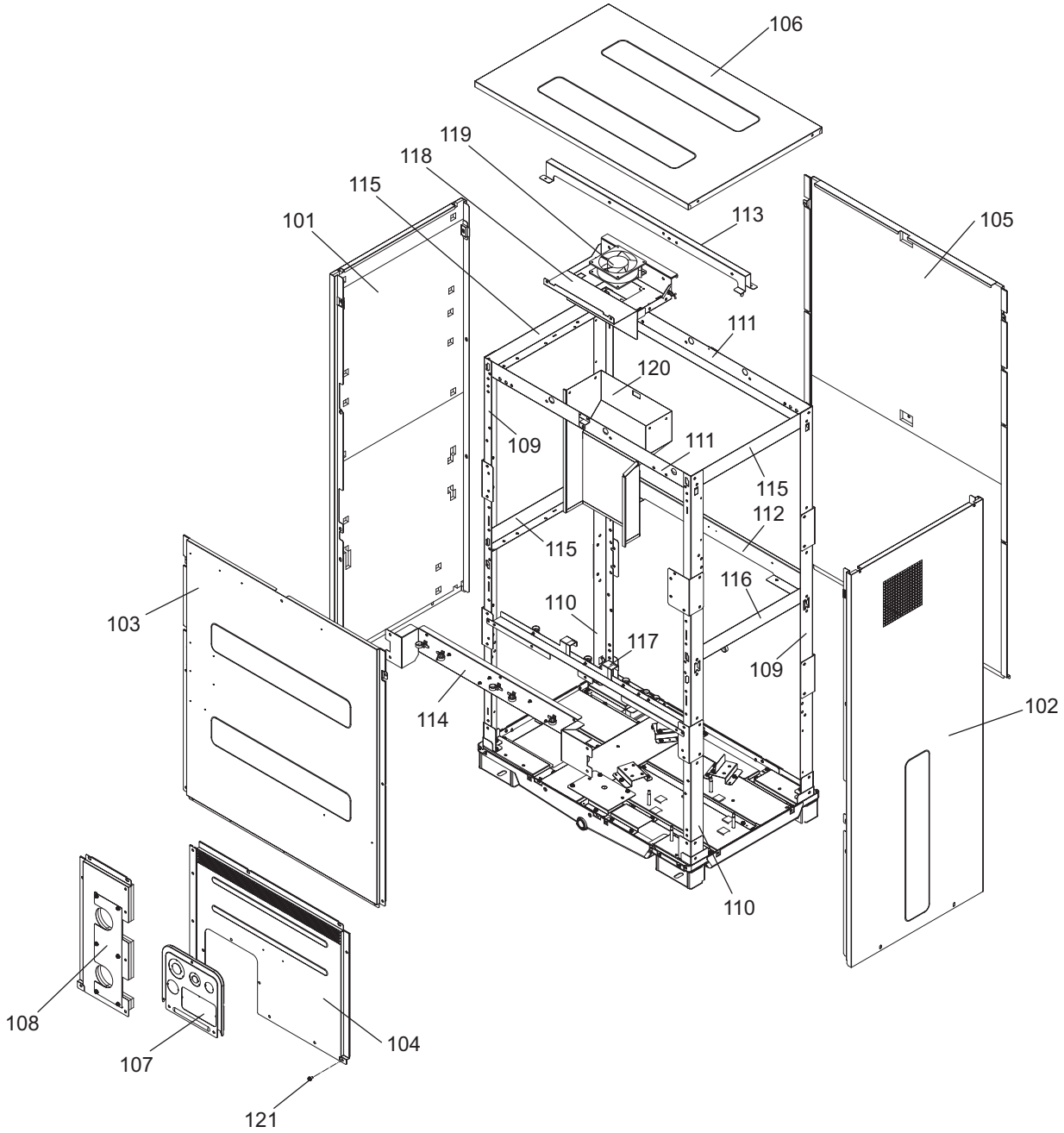

EXTERNAL PARTS

No.	Part No.	Part Name	Spec.	PQRY-M72TXU-A	PQRY-M96TXU-A	PQRY-M120TXU-A	PQRY-M144TXU-A	PQRY-M168TXU-A	PQRY-M192TXU-A	Dwg. No.	Notes for the models	Revision info.
101	R61 301 662	Panel assy L		1	1	1	1	1	1	KB00C9RPG01		
102	R61 302 662	Panel assy R		1	1	1	1	1	1	KB00C9VHG01		
103	R61 303 662	Panel assy FU		1	1	1	1	1	1	KB00C9RMG01		
104	R61 304 662	Panel assy FB		1	1	1	1	1	1	KB00C9RNG01		
105	R61 305 662	Panel assy B		1	1	1	1	1	1	KB00C9RQG01		
106	R61 306 662	Panel assy T		1	1	1	1	1	1	KB00CA7GG01		
107	R61 328 690	Piping cover		1	1	1	1	1	1	KD00M400G12		
108	R61 307 662	Panel assy W		1	1	1	1	1	1	KJ00S815G01		
109	R61 088 626	Pillar assy	Main	2	2	2	2	2	2	KB00CADBG01		
110	R61 089 626	Pillar assy	Main	2	2	2	2	2	2	KB00CAD5G01		
111	R61 191 162	Frame assy H		2	2	2	2	2	2	KB00C9BLG01		
112	R61 192 162	Frame assy HB		1	1	1	1	1	1	KB00C9BMG01		
113	R61 193 162	Frame	Duct support	1	1	1	1	1	1	KD02V972H01		
114	R61 194 162	Frame assy M		1	1	1	1	1	1	KJ00S914G01		
115	R61 195 162	Frame side		3	3	3	3	3	3	KJ02B095H01		
116	R61 196 162	Frame side assy		1	1	1	1	1	1	KJ00U019G01		
117	R61 197 162	Frame assy HF		1	1	1	1	1	1	KJ00S927G01		
118	R61 066 128	Attachment fan		1	1	1	1	1	1	KB00C9BSG01		
119	R61 003 300	Fan	109S025UL	1	1	1	1	1	1	P712360X01		
120	R61 081 457	Duct		1	1	1	1	1	1	KB00C9VEG01		
121	R61 048 087	H Screw	5×10 KNURLED (30pcs)	3	3	3	3	3	3	KB00H418G14		

EXTERNAL PARTS

No.	Part No.	Part Name	Spec.	PQRY-M216TXU-A	PQRY-M240TXU-A	PQRY-M72YXU-A	PQRY-M96YXU-A	PQRY-M120YXU-A	PQRY-M144YXU-A	Dwg. No.	Notes for the models	Revision info.
101	R61 301 662	Panel assy L		1	1	1	1	1	1	KB00C9RPG01		
102	R61 302 662	Panel assy R		1	1	1	1	1	1	KB00C9VHG01		
103	R61 303 662	Panel assy FU		1	1	1	1	1	1	KB00C9RMG01		
104	R61 304 662	Panel assy FB		1	1	1	1	1	1	KB00C9RNG01		
105	R61 305 662	Panel assy B		1	1	1	1	1	1	KB00C9RQG01		
106	R61 306 662	Panel assy T		1	1	1	1	1	1	KB00CA7GG01		
107	R61 328 690	Piping cover		1	1	1	1	1	1	KD00M400G12		
108	R61 307 662	Panel assy W		1	1	1	1	1	1	KJ00S815G01		
109	R61 088 626	Pillar assy	Main	2	2	2	2	2	2	KB00CADBG01		
110	R61 089 626	Pillar assy	Main	2	2	2	2	2	2	KB00CAD5G01		
111	R61 191 162	Frame assy H		2	2	2	2	2	2	KB00C9BLG01		
112	R61 192 162	Frame assy HB		1	1	1	1	1	1	KB00C9BMG01		
113	R61 193 162	Frame	Duct support	1	1	1	1	1	1	KD02V972H01		
114	R61 194 162	Frame assy M		1	1	1	1	1	1	KJ00S914G01		
115	R61 195 162	Frame side		3	3	3	3	3	3	KJ02B095H01		
116	R61 196 162	Frame side assy		1	1	1	1	1	1	KJ00U019G01		
117	R61 197 162	Frame assy HF		1	1	1	1	1	1	KJ00S927G01		
118	R61 066 128	Attachment fan		1	1	1	1	1	1	KB00C9BSG01		
119	R61 003 300	Fan	109S025UL	1	1	1	1	1	1	P712360X01		
120	R61 081 457	Duct		1	1	1	1	1	1	KB00C9VEG01		
121	R61 048 087	H Screw	5×10 KNURLED (30pcs)	3	3	3	3	3	3	KB00H418G14		

EXTERNAL PARTS

No.	Part No.	Part Name	Spec.	PQRY-M168YXU-A	PQRY-M192YXU-A	PQRY-M216YXU-A	PQRY-M240YXU-A			Dwg. No.	Notes for the models	Revision info.
101	R61 301 662	Panel assy L		1	1	1	1			KB00C9RPG01		
102	R61 302 662	Panel assy R		1	1	1	1			KB00C9VHG01		
103	R61 303 662	Panel assy FU		1	1	1	1			KB00C9RMG01		
104	R61 304 662	Panel assy FB		1	1	1	1			KB00C9RNG01		
105	R61 305 662	Panel assy B		1	1	1	1			KB00C9RQG01		
106	R61 306 662	Panel assy T		1	1	1	1			KB00CA7GG01		
107	R61 328 690	Piping cover		1	1	1	1			KD00M400G12		
108	R61 307 662	Panel assy W		1	1	1	1			KJ00S815G01		
109	R61 088 626	Pillar assy	Main	2	2	2	2			KB00CADBG01		
110	R61 089 626	Pillar assy	Main	2	2	2	2			KB00CAD5G01		
111	R61 191 162	Frame assy H		2	2	2	2			KB00C9BLG01		
112	R61 192 162	Frame assy HB		1	1	1	1			KB00C9BMG01		
113	R61 193 162	Frame	Duct support	1	1	1	1			KD02V972H01		
114	R61 194 162	Frame assy M		1	1	1	1			KJ00S914G01		
115	R61 195 162	Frame side		3	3	3	3			KJ02B095H01		
116	R61 196 162	Frame side assy		1	1	1	1			KJ00U019G01		
117	R61 197 162	Frame assy HF		1	1	1	1			KJ00S927G01		
118	R61 066 128	Attachment fan		1	1	1	1			KB00C9BSG01		
119	R61 003 300	Fan	109S025UL	1	1	1	1			P712360X01		
120	R61 081 457	Duct		1	1	1	1			KB00C9VEG01		
121	R61 048 087	H Screw	5×10 KNURLED (30pcs)	3	3	3	3			KB00H418G14		

FUNCTIONAL PARTS

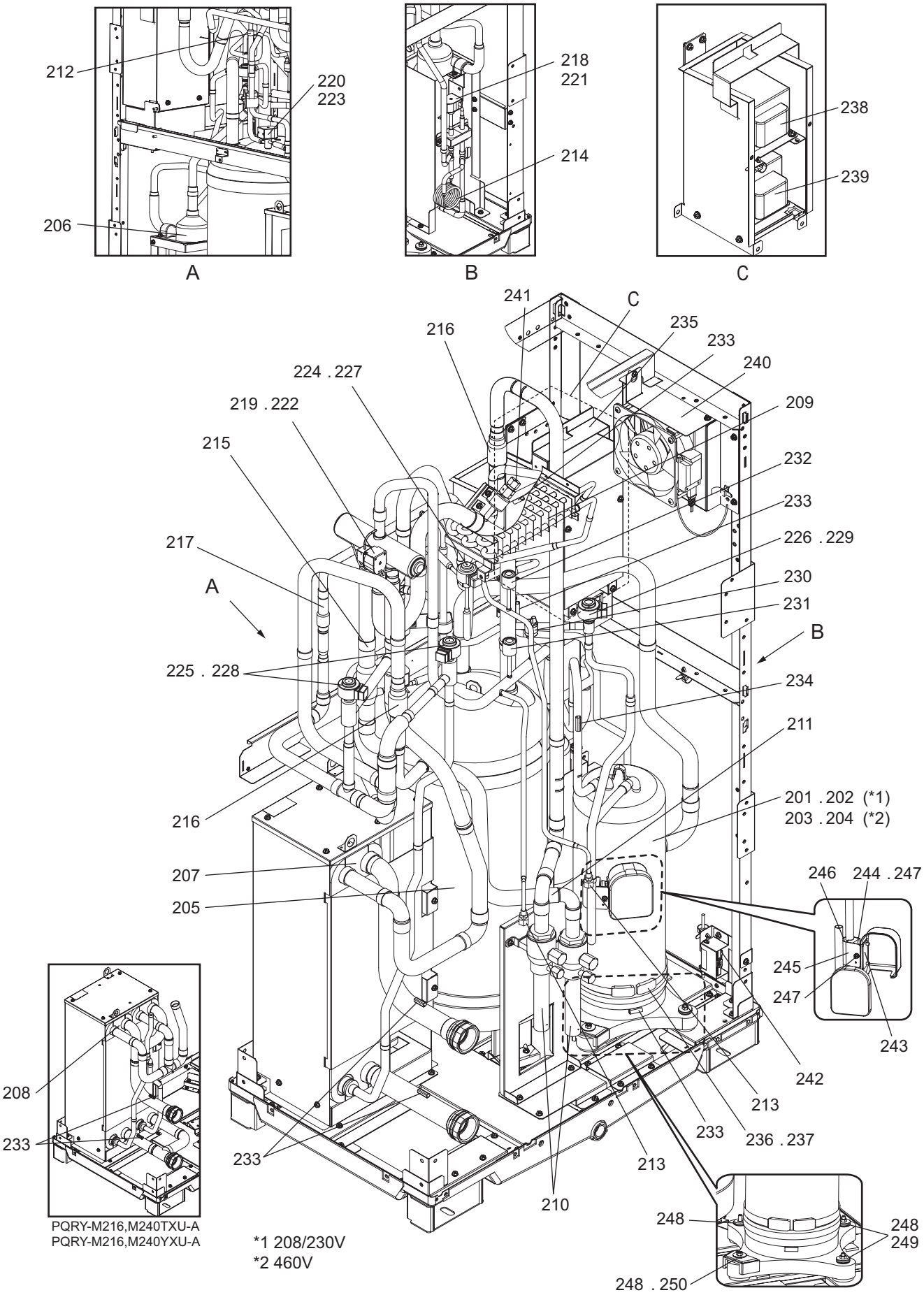

FUNCTIONAL PARTS

No.	Part No.	Part Name	Spec.	PQRY-M72TXU-A	PQRY-M96TXU-A	PQRY-M120TXU-A	PQRY-M144TXU-A	PQRY-M168TXU-A	PQRY-M192TXU-A	Dwg. No.	Notes for the models	Revision info.
201	R69 249 478	Scroll compressor	HVK85FB-U	1	1	1	1	1	1	EP10235B02	*1 208/230V	
202	R69 251 478	Scroll compressor	HVK107FA							EP10249B01	*1 208/230V	
203	R69 250 478	Scroll compressor	HVK85FB-YE							EP10235B03	*2 460V	
204	R69 252 478	Scroll compressor	HVK107FA-Y							EP10249B02	*2 460V	
205	R61 226 484	Accumulator assy		1	1	1	1	1	1	KJ00U079G01		
206	R61 075 487	Oil separator assy		1	1	1	1	1	1	KB00CA14G02		
207	R61 N90 480	Heat exchanger assy		1	1	1	1	1	1	KJ00U080G01		
208	R61 N91 480	Heat exchanger assy								KJ00U081G01		
209	R61 K80 480	INV heat exchanger assy		1	1	1	1	1	1	KJ00T636G01		
210	R61 034 410	Ball valve	SBV10-002	2	2	2	2	2	2	KJ00S007G03	<BV1,2>	
211	R61 022 454	Strainer	25.4D	1	1	1	1	1	1	KJ00P967G01	<ST1>	
212	R61 012 454	Strainer	12.5D	1	1	1	1	1	1	KB48S298G01	<ST18>	
213	R61 010 413	Check joint		2	2	2	2	2	2	P666028X01	<CJ1,2>	
214	R61 027 425	Capillary tube assy		1	1	1	1	1	1	KD49U675G01	<CP1>	
215	R61 065 418	Check valve	YBV-22Y9GMD-4	1	1	1	1	1	1	P639196X01	<CV2a>	
216	R61 072 418	Check valve	BCV-1807DYQ2	2	2	2	2	2	2	P639218X02	<CV3a,5a>	
217	R63 R43 418	Check valve	BCV-1005DYQ82	1	1	1	1	1	1	P639165X01	<CV6a>	
218	R63 046 232	Solenoid valve	FDF2A77	1	1	1	1	1	1	P631312X01	<SV1a>	
219	R61 013 403	Four way valve	STF-H0731	1	1	1	1	1	1	P633130X01	<21S4a>	
220	R63 027 232	Solenoid valve	VPV-L202D	1	1	1	1	1	1	P631296X01	<SV9>	
221	R61 029 243	Solenoid valve coil	FQ-D808	1	1	1	1	1	1	P472086X01	<SV1a>	
222	R61 040 243	Solenoid valve coil	STF-H01AQ1969UA1	1	1	1	1	1	1	P472095X01	<21S4a>	
223	R61 011 243	Solenoid valve coil	VPV-MOAQ540UA1	1	1	1	1	1	1	P472047X01	<SV9>	
224	R63 R34 401	Linear expansion valve	CAM-B35YGMD-2	1	1	1	1	1	1	P632416X01	<LEVINV>	
225	R61 112 401	Linear expansion valve	PDM-BD130MD-1	2	2	2	2	2	2	P632630X01	<LEV7,8>	
226	R61 107 401	Linear expansion valve	PAM-BB0YGMD-2	1	1	1	1	1	1	KR50C486H01	<LEV4>	
227	R61 131 401	Linear expansion valve coil	CAM-MD12MD-126	1	1	1	1	1	1	P472114X01	<LEVINV>	
228	R61 179 401	Linear expansion valve coil	PAM-MD12MD-35	2	2	2	2	2	2	P472176X01	<LEV7,8>	
229	R61 170 401	Linear expansion valve coil	PAM-MD12MD-30	1	1	1	1	1	1	KR50G080H01	<LEV4>	
230	R61 056 208	Pressure switch	ACB-1UB28W	1	1	1	1	1	1	P426320X02	<63H1>	
231	R61 169 288	Pressure sensor	HP D497	1	1	1	1	1	1	KJ00U082G01	<63HS1>	
232	R61 170 288	Pressure sensor	LP D503	1	1	1	1	1	1	KJ00U083G01	<63LS>	
233	R61 060 200	Thermistor	150-522-96001	5	5	5	5	5	5	P418065X01	<TH5,7,8,15,INV>	
234	R61 396 200	Thermistor	158-204-97484	1	1	1	1	1	1	P425416X02	<TH4>	
235	R61 076 260	Transformer assy								KJ00U084G01		
236	R61 029 237	Belt heater	240V 45W	1	1	1	1	1	1	KJ78S823G01	<CH11>	
237	R61 030 237	Belt heater	240V 48W							KJ78S819G01	<CH11>	
238	R12 010 938	Transformer	T460/230V 0.8AL							KR65C594H01	<T02>	Chg.
239	R12 011 938	Transformer	T460/230V 0.8AS							KR65C595H01	<T03>	Chg.
240	R61 004 300	Fan	109-603	1	1	1	1	1	1	KJ00U085G01	<MF3>	
241	R12 001 902	Fusible plug		1	1	1	1	1	1	P649027X01		
242	R61 171 288	Sensor assy R32		1	1	1	1	1	1	KJ00U086G01		
243	R61 001 132	Attachment		1	1	1	1	1	1	KB02K008H01		
244	R61 005 609	Attachment Saddle		1	1	1	1	1	1	KL00L214G03		
245	R61 003 456	Saddle		1	1	1	1	1	1	KJ02K540H01		

FUNCTIONAL PARTS

No.	Part No.	Part Name	Spec.	PQRY-M72TXU-A	PQRY-M96TXU-A	PQRY-M120TXU-A	PQRY-M144TXU-A	PQRY-M168TXU-A	PQRY-M192TXU-A	Dwg. No.	Notes for the models	Revision info.
246	R11 934 905	Packing		2	2	2	2	2	2	W483653G03		
247	R61 010 087	Screw upset	M5×12	3	3	3	3	3	3	S516322H01		
248	R63 852 860	Rubber mount		4	4	4	4	4	4	W897574H01		
249	R61 G95 122	Nut special		2	2	2	2	2	2	W818749G01		
250	R61 007 447	Attachment(HH) Set	Attachment(HH),Nut,Washer	1	1	1	1	1	1	KK00H943G01		

FUNCTIONAL PARTS

No.	Part No.	Part Name	Spec.	PQRY-M216TXU-A	PQRY-M240TXU-A	PQRY-M72YXU-A	PQRY-M96YXU-A	PQRY-M120YXU-A	PQRY-M144YXU-A	Dwg. No.	Notes for the models	Revision info.
201	R69 249 478	Scroll compressor	HVK85FB-U							EP10235B02	*1 208/230V	
202	R69 251 478	Scroll compressor	HVK107FA	1	1					EP10249B01	*1 208/230V	
203	R69 250 478	Scroll compressor	HVK85FB-YE			1	1	1	1	EP10235B03	*2 460V	
204	R69 252 478	Scroll compressor	HVK107FA-Y							EP10249B02	*2 460V	
205	R61 226 484	Accumulator assy		1	1	1	1	1	1	KJ00U079G01		
206	R61 075 487	Oil separator assy		1	1	1	1	1	1	KB00CA14G02		
207	R61 N90 480	Heat exchanger assy				1	1	1	1	KJ00U080G01		
208	R61 N91 480	Heat exchanger assy		1	1					KJ00U081G01		
209	R61 K80 480	INV heat exchanger assy		1	1	1	1	1	1	KJ00T636G01		
210	R61 034 410	Ball valve	SBV10-002	2	2	2	2	2	2	KJ00S007G03	<BV1,2>	
211	R61 022 454	Strainer	25.4D	1	1	1	1	1	1	KJ00P967G01	<ST1>	
212	R61 012 454	Strainer	12.5D	1	1	1	1	1	1	KB48S298G01	<ST18>	
213	R61 010 413	Check joint		2	2	2	2	2	2	P666028X01	<CJ1,2>	
214	R61 027 425	Capillary tube assy		1	1	1	1	1	1	KD49U675G01	<CP1>	
215	R61 065 418	Check valve	YBV-22Y9GMD-4	1	1	1	1	1	1	P639196X01	<CV2a>	
216	R61 072 418	Check valve	BCV-1807DYQ2	2	2	2	2	2	2	P639218X02	<CV3a,5a>	
217	R63 R43 418	Check valve	BCV-1005DYQ82	1	1	1	1	1	1	P639165X01	<CV6a>	
218	R63 046 232	Solenoid valve	FDF2A77	1	1	1	1	1	1	P631312X01	<SV1a>	
219	R61 013 403	Four way valve	STF-H0731	1	1	1	1	1	1	P633130X01	<21S4a>	
220	R63 027 232	Solenoid valve	VPV-L202D	1	1	1	1	1	1	P631296X01	<SV9>	
221	R61 029 243	Solenoid valve coil	FQ-D808	1	1	1	1	1	1	P472086X01	<SV1a>	
222	R61 040 243	Solenoid valve coil	STF-H01AQ1969UA1	1	1	1	1	1	1	P472095X01	<21S4a>	
223	R61 011 243	Solenoid valve coil	VPV-MOAQ540UA1	1	1	1	1	1	1	P472047X01	<SV9>	
224	R63 R34 401	Linear expansion valve	CAM-B35YGMD-2	1	1	1	1	1	1	P632416X01	<LEVINV>	
225	R61 112 401	Linear expansion valve	PDM-BD130MD-1	2	2	2	2	2	2	P632630X01	<LEV7,8>	
226	R61 107 401	Linear expansion valve	PAM-BB0YGMD-2	1	1	1	1	1	1	KR50C486H01	<LEV4>	
227	R61 131 401	Linear expansion valve coil	CAM-MD12MD-126	1	1	1	1	1	1	P472114X01	<LEVINV>	
228	R61 179 401	Linear expansion valve coil	PAM-MD12MD-35	2	2	2	2	2	2	P472176X01	<LEV7,8>	
229	R61 170 401	Linear expansion valve coil	PAM-MD12MD-30	1	1	1	1	1	1	KR50G080H01	<LEV4>	
230	R61 056 208	Pressure switch	ACB-1UB28W	1	1	1	1	1	1	P426320X02	<63H1>	
231	R61 169 288	Pressure sensor	HP D497	1	1	1	1	1	1	KJ00U082G01	<63HS1>	
232	R61 170 288	Pressure sensor	LP D503	1	1	1	1	1	1	KJ00U083G01	<63LS>	
233	R61 060 200	Thermistor	150-522-96001	5	5	5	5	5	5	P418065X01	<TH5,7,8,15,INV>	
234	R61 396 200	Thermistor	158-204-97484	1	1	1	1	1	1	P425416X02	<TH4>	
235	R61 076 260	Transformer assy				1	1	1	1	KJ00U084G01		
236	R61 029 237	Belt heater	240V 45W			1	1	1	1	KJ78S823G01	<CH11>	
237	R61 030 237	Belt heater	240V 48W	1	1					KJ78S819G01	<CH11>	
238	R12 010 938	Transformer	T460/230V 0.8AL			1	1	1	1	KR65C594H01	<T02>	Chg.
239	R12 011 938	Transformer	T460/230V 0.8AS			1	1	1	1	KR65C595H01	<T03>	Chg.
240	R61 004 300	Fan	109-603	1	1	1	1	1	1	KJ00U085G01	<MF3>	
241	R12 001 902	Fusible plug		1	1	1	1	1	1	P649027X01		
242	R61 171 288	Sensor assy R32		1	1	1	1	1	1	KJ00U086G01		
243	R61 001 132	Attachment		1	1	1	1	1	1	KB02K008H01		
244	R61 005 609	Attachment Saddle		1	1	1	1	1	1	KL00L214G03		
245	R61 003 456	Saddle		1	1	1	1	1	1	KJ02K540H01		

FUNCTIONAL PARTS

No.	Part No.	Part Name	Spec.	PQRY-M216TXU-A	PQRY-M240TXU-A	PQRY-M72YXU-A	PQRY-M96YXU-A	PQRY-M120YXU-A	PQRY-M144YXU-A	Dwg. No.	Notes for the models	Revision info.
246	R11 934 905	Packing		2	2	2	2	2	2	W483653G03		
247	R61 010 087	Screw upset	M5×12	3	3	3	3	3	3	S516322H01		
248	R63 852 860	Rubber mount		4	4	4	4	4	4	W897574H01		
249	R61 G95 122	Nut special		2	2	2	2	2	2	W818749G01		
250	R61 007 447	Attachment(HH) Set	Attachment(HH),Nut,Washer	1	1	1	1	1	1	KK00H943G01		

FUNCTIONAL PARTS

No.	Part No.	Part Name	Spec.	PQRY-M168YXU-A	PQRY-M192YXU-A	PQRY-M216YXU-A	PQRY-M240YXU-A			Dwg. No.	Notes for the models	Revision info.
201	R69 249 478	Scroll compressor	HVK85FB-U							EP10235B02	*1 208/230V	
202	R69 251 478	Scroll compressor	HVK107FA							EP10249B01	*1 208/230V	
203	R69 250 478	Scroll compressor	HVK85FB-YE	1	1					EP10235B03	*2 460V	
204	R69 252 478	Scroll compressor	HVK107FA-Y			1	1			EP10249B02	*2 460V	
205	R61 226 484	Accumulator assy		1	1	1	1			KJ00U079G01		
206	R61 075 487	Oil separator assy		1	1	1	1			KB00CA14G02		
207	R61 N90 480	Heat exchanger assy		1	1					KJ00U080G01		
208	R61 N91 480	Heat exchanger assy				1	1			KJ00U081G01		
209	R61 K80 480	INV heat exchanger assy		1	1	1	1			KJ00T636G01		
210	R61 034 410	Ball valve	SBV10-002	2	2	2	2			KJ00S007G03	<BV1,2>	
211	R61 022 454	Strainer	25.4D	1	1	1	1			KJ00P967G01	<ST1>	
212	R61 012 454	Strainer	12.5D	1	1	1	1			KB48S298G01	<ST18>	
213	R61 010 413	Check joint		2	2	2	2			P666028X01	<CJ1,2>	
214	R61 027 425	Capillary tube assy		1	1	1	1			KD49U675G01	<CP1>	
215	R61 065 418	Check valve	YBV-22Y9GMD-4	1	1	1	1			P639196X01	<CV2a>	
216	R61 072 418	Check valve	BCV-1807DYQ2	2	2	2	2			P639218X02	<CV3a,5a>	
217	R63 R43 418	Check valve	BCV-1005DYQ82	1	1	1	1			P639165X01	<CV6a>	
218	R63 046 232	Solenoid valve	FDF2A77	1	1	1	1			P631312X01	<SV1a>	
219	R61 013 403	Four way valve	STF-H0731	1	1	1	1			P633130X01	<21S4a>	
220	R63 027 232	Solenoid valve	VPV-L202D	1	1	1	1			P631296X01	<SV9>	
221	R61 029 243	Solenoid valve coil	FQ-D808	1	1	1	1			P472086X01	<SV1a>	
222	R61 040 243	Solenoid valve coil	STF-H01AQ1969UA1	1	1	1	1			P472095X01	<21S4a>	
223	R61 011 243	Solenoid valve coil	VPV-MOAQ540UA1	1	1	1	1			P472047X01	<SV9>	
224	R63 R34 401	Linear expansion valve	CAM-B35YGMD-2	1	1	1	1			P632416X01	<LEVINV>	
225	R61 112 401	Linear expansion valve	PDM-BD130MD-1	2	2	2	2			P632630X01	<LEV7,8>	
226	R61 107 401	Linear expansion valve	PAM-BB0YGMD-2	1	1	1	1			KR50C486H01	<LEV4>	
227	R61 131 401	Linear expansion valve coil	CAM-MD12MD-126	1	1	1	1			P472114X01	<LEVINV>	
228	R61 179 401	Linear expansion valve coil	PAM-MD12MD-35	2	2	2	2			P472176X01	<LEV7,8>	
229	R61 170 401	Linear expansion valve coil	PAM-MD12MD-30	1	1	1	1			KR50G080H01	<LEV4>	
230	R61 056 208	Pressure switch	ACB-1UB28W	1	1	1	1			P426320X02	<63H1>	
231	R61 169 288	Pressure sensor	HP D497	1	1	1	1			KJ00U082G01	<63HS1>	
232	R61 170 288	Pressure sensor	LP D503	1	1	1	1			KJ00U083G01	<63LS>	
233	R61 060 200	Thermistor	150-522-96001	5	5	5	5			P418065X01	<TH5,7,8,15,INV>	
234	R61 396 200	Thermistor	158-204-97484	1	1	1	1			P425416X02	<TH4>	
235	R61 076 260	Transformer assy		1	1	1	1			KJ00U084G01		
236	R61 029 237	Belt heater	240V 45W	1	1					KJ78S823G01	<CH11>	
237	R61 030 237	Belt heater	240V 48W			1	1			KJ78S819G01	<CH11>	
238	R12 010 938	Transformer	T460/230V 0.8AL	1	1	1	1			KR65C594H01	<T02>	Chg.
239	R12 011 938	Transformer	T460/230V 0.8AS	1	1	1	1			KR65C595H01	<T03>	Chg.
240	R61 004 300	Fan	109-603	1	1	1	1			KJ00U085G01	<MF3>	
241	R12 001 902	Fusible plug		1	1	1	1			P649027X01		
242	R61 171 288	Sensor assy R32		1	1	1	1			KJ00U086G01		
243	R61 001 132	Attachment		1	1	1	1			KB02K008H01		
244	R61 005 609	Attachment Saddle		1	1	1	1			KL00L214G03		
245	R61 003 456	Saddle		1	1	1	1			KJ02K540H01		

FUNCTIONAL PARTS

No.	Part No.	Part Name	Spec.	PQRY-M168YXU-A	PQRY-M192YXU-A	PQRY-M216YXU-A	PQRY-M240YXU-A			Dwg. No.	Notes for the models	Revision info.
246	R11 934 905	Packing		2	2	2	2			W483653G03		
247	R61 010 087	Screw upset	M5×12	3	3	3	3			S516322H01		
248	R63 852 860	Rubber mount		4	4	4	4			W897574H01		
249	R61 G95 122	Nut special		2	2	2	2			W818749G01		
250	R61 007 447	Attachment(HH) Set	Attachment(HH),Nut,Washer	1	1	1	1			KK00H943G01		

CONTROL BOX PARTS (1)

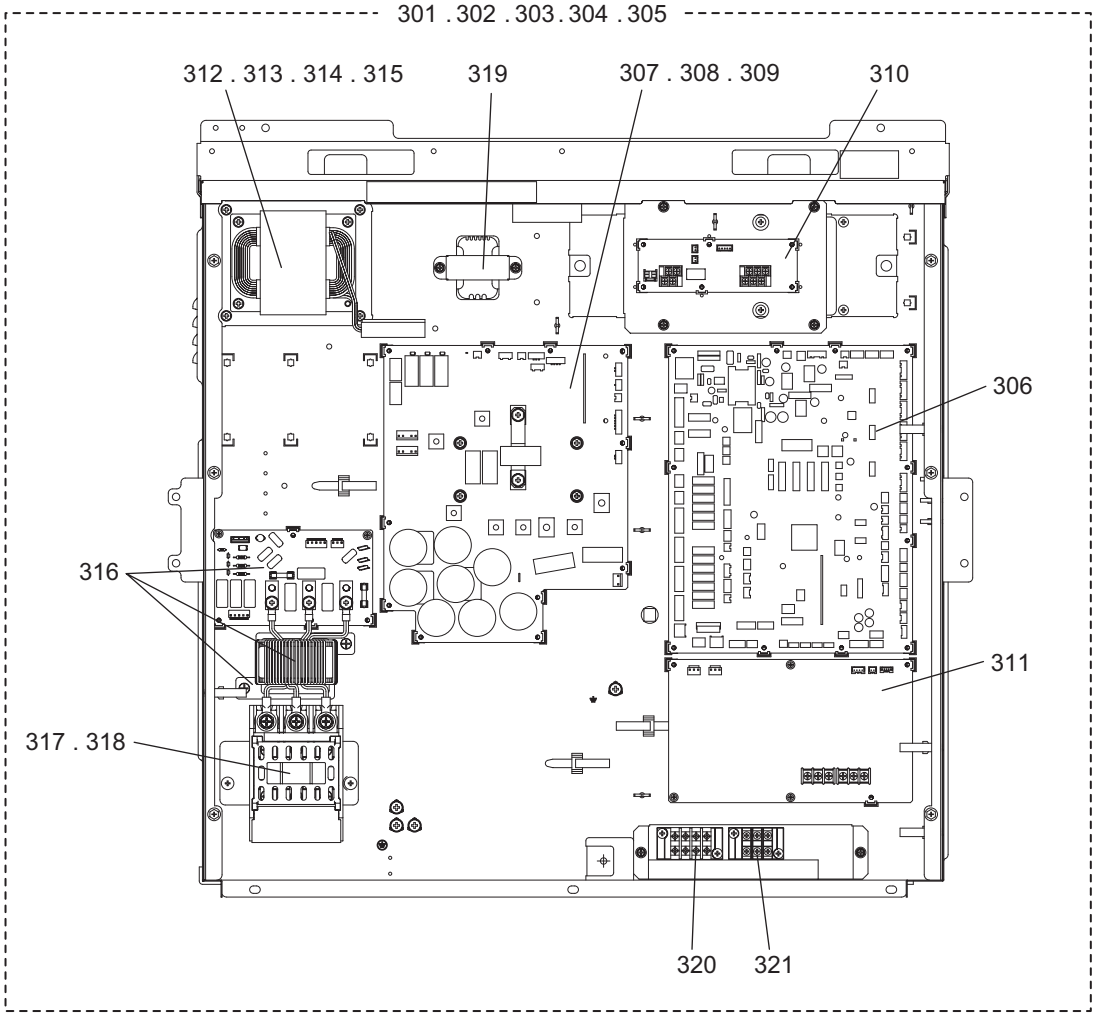

CONTROL BOX PARTS (1)

No.	Part No.	Part Name	Spec.	PQRY-M72TXU-A	PQRY-M96TXU-A	PQRY-M120TXU-A	PQRY-M144TXU-A	PQRY-M168TXU-A	PQRY-M192TXU-A	Dwg. No.	Notes for the models	Revision info.
301	R61 P50 305	Control box	WR-M72TXU	1						KE80L605G01		
302	R61 P51 305	Control box	WR-M96/120TXU		1	1				KE80L605G02		
303	R61 P52 305	Control box	WR-M144/168TXU				1	1		KE80L605G03		
304	R61 P53 305	Control box	WR-M192TXU						1	KE80L605G04		
305	R61 P54 305	Control box	WR-M216/240TXU							KE80L605G05		
306	R61 A01 280	Control board	MAIN13	1	1	1	1	1	1	KE80L211G05	<MAIN13/WR2>	
307	R61 824 280	INV board	INV43	1	1	1				KE80L461G03	<INV43>	
308	R61 823 280	INV board	INV43				1	1	1	KE80L461G02	<INV43>	
309	R61 826 280	INV board	INV43							KE80L461G01	<INV43>	
310	R61 A02 280	I/O board	W-IO-2	1	1	1	1	1	1	KE80C912G03	<W-IO-2>	
311	R61 984 280	M-NET board	PS-MNET-YS	1	1	1	1	1	1	KE80C055G30	<PS-MNET-YS>	
312	R61 097 259	Reactor		1						KR65C808H01	<DCL>	
313	R61 098 259	Reactor			1	1				KR65C812H01	<DCL>	
314	R61 099 259	Reactor					1	1		KR65C810H01	<DCL>	
315	R61 100 259	Reactor							1	KR65C811H01	<DCL>	
316	R61 063 293	Noise filter	board,coil,plate	1	1	1	1	1	1	KE80C892G10	<Noise filter>	
317	R61 092 246	Terminal block		1	1	1	1	1	1	KR73G209H01	<TB1>	
318	R61 093 246	Terminal block								KR73G209H02	<TB1>	
319	R61 052 260	Transformer	240V23.5V	1	1	1	1	1	1	P715563X01	<T04>	
320	R61 019 246	Terminal block		1	1	1	1	1	1	S436005H15	<TB08>	
321	R11 002 782	Terminal block		1	1	1	1	1	1	S436005H13	<TB09>	

PQRY-M72,M96,M120,M144TXU-A PQRY-M168,M192,M216,M240TXU-A CONTROL BOX PARTS (1)

No.	Part No.	Part Name	Spec.	PQRY-M216TXU-A	PQRY-M240TXU-A					Dwg. No.	Notes for the models	Revision info.
301	R61 P50 305	Control box	WR-M72TXU							KE80L605G01		
302	R61 P51 305	Control box	WR-M96/120TXU							KE80L605G02		
303	R61 P52 305	Control box	WR-M144/168TXU							KE80L605G03		
304	R61 P53 305	Control box	WR-M192TXU							KE80L605G04		
305	R61 P54 305	Control box	WR-M216/240TXU	1	1					KE80L605G05		
306	R61 A01 280	Control board	MAIN13	1	1					KE80L211G05	<MAIN13/WR2>	
307	R61 824 280	INV board	INV43							KE80L461G03	<INV43>	
308	R61 823 280	INV board	INV43							KE80L461G02	<INV43>	
309	R61 826 280	INV board	INV43	1	1					KE80L461G01	<INV43>	
310	R61 A02 280	I/O board	W-IO-2	1	1					KE80C912G03	<W-IO-2>	
311	R61 984 280	M-NET board	PS-MNET-YS	1	1					KE80C055G30	<PS-MNET-YS>	
312	R61 097 259	Reactor								KR65C808H01	<DCL>	
313	R61 098 259	Reactor								KR65C812H01	<DCL>	
314	R61 099 259	Reactor								KR65C810H01	<DCL>	
315	R61 100 259	Reactor		1	1					KR65C811H01	<DCL>	
316	R61 063 293	Noise filter	board,coil,plate	1	1					KE80C892G10	<Noise filter>	
317	R61 092 246	Terminal block								KR73G209H01	<TB1>	
318	R61 093 246	Terminal block		1	1					KR73G209H02	<TB1>	
319	R61 052 260	Transformer	240V23.5V	1	1					P715563X01	<T04>	
320	R61 019 246	Terminal block		1	1					S436005H15	<TB08>	
321	R11 002 782	Terminal block		1	1					S436005H13	<TB09>	

CONTROL BOX PARTS (2)

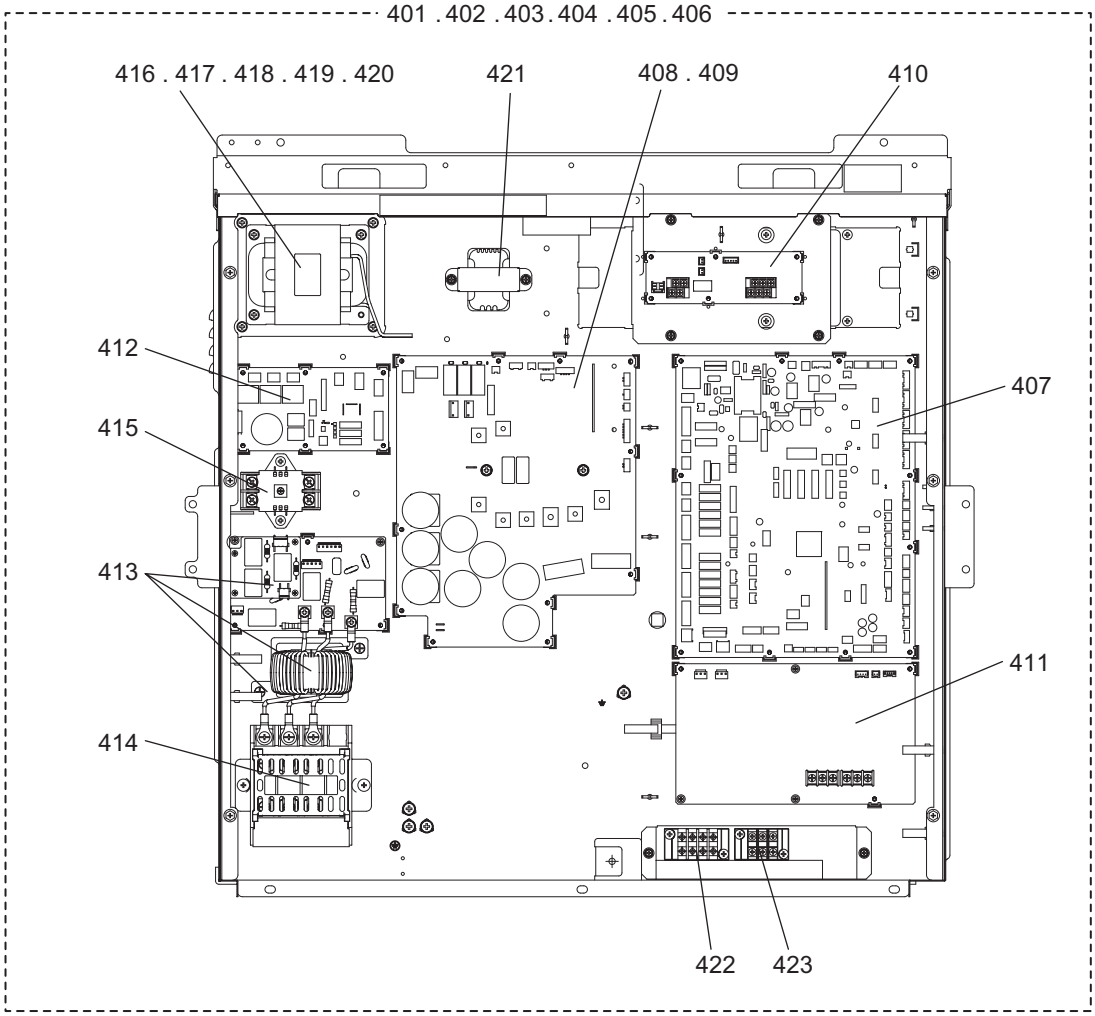

CONTROL BOX PARTS (2)

No.	Part No.	Part Name	Spec.	PQRY-M72YXU-A	PQRY-M96YXU-A	PQRY-M120YXU-A	PQRY-M144YXU-A	PQRY-M168YXU-A	PQRY-M192YXU-A	Dwg. No.	Notes for the models	Revision info.
401	R61 P55 305	Control box	WR-M72/96YXU	1	1					KE80L605G06		
402	R61 P56 305	Control box	WR-M120YXU			1				KE80L605G07		
403	R61 P57 305	Control box	WR-M144YXU				1			KE80L605G08		
404	R61 P58 305	Control box	WR-M168YXU					1		KE80L605G09		
405	R61 P59 305	Control box	WR-M192YXU						1	KE80L605G10		
406	R61 P60 305	Control box	WR-M216/240YXU							KE80L605G11		
407	R61 A01 280	Control board	MAIN13	1	1	1	1	1	1	KE80L211G05	<MAIN13/WR2>	
408	R61 987 280	INV board	INV46Y	1	1	1				KE80L461G06	<INV46Y>	
409	R61 988 280	INV board	INV46Y				1	1	1	KE80L461G05	<INV46Y>	
410	R61 A02 280	I/O board	W-IO-2	1	1	1	1	1	1	KE80C912G03	<W-IO-2>	
411	R61 990 280	M-NET board	PS-MNET-YS	1	1	1	1	1	1	KE80C055G31	<PS-MNET-YS>	
412	R61 991 280	REC board	REC01Y	1	1	1	1	1	1	KE80L212G03	<REC01Y>	
413	R61 064 293	Noise filter	board,coil,plate	1	1	1	1	1	1	KE80C892G11	<Noise filter>	
414	R61 094 246	Terminal block		1	1	1	1	1	1	KR73G210H01	<TB1>	
415	R61 097 246	Terminal block		1	1	1	1	1	1	KR75G213H01	<TB2>	
416	R61 109 259	Reactor		1	1					KR65G207H01	<DCL>	
417	R61 105 259	Reactor				1	1			KR65G158H01	<DCL>	
418	R61 106 259	Reactor						1		KR65G159H01	<DCL>	
419	R61 107 259	Reactor							1	KR65G160H01	<DCL>	
420	R61 108 259	Reactor								KR65G161H01	<DCL>	
421	R61 052 260	Transformer	240V23.5V	1	1	1	1	1	1	P715563X01	<T04>	
422	R61 019 246	Terminal block		1	1	1	1	1	1	S436005H15	<TB08>	
423	R11 002 782	Terminal block		1	1	1	1	1	1	S436005H13	<TB09>	

CONTROL BOX PARTS (2)

No.	Part No.	Part Name	Spec.	PQRY-M216YXU-A	PQRY-M240YXU-A					Dwg. No.	Notes for the models	Revision info.
401	R61 P55 305	Control box	WR-M72/96YXU							KE80L605G06		
402	R61 P56 305	Control box	WR-M120YXU							KE80L605G07		
403	R61 P57 305	Control box	WR-M144YXU							KE80L605G08		
404	R61 P58 305	Control box	WR-M168YXU							KE80L605G09		
405	R61 P59 305	Control box	WR-M192YXU							KE80L605G10		
406	R61 P60 305	Control box	WR-M216/240YXU	1	1					KE80L605G11		
407	R61 A01 280	Control board	MAIN13	1	1					KE80L211G05	<MAIN13/WR2>	
408	R61 987 280	INV board	INV46Y							KE80L461G06	<INV46Y>	
409	R61 988 280	INV board	INV46Y	1	1					KE80L461G05	<INV46Y>	
410	R61 A02 280	I/O board	W-IO-2	1	1					KE80C912G03	<W-IO-2>	
411	R61 990 280	M-NET board	PS-MNET-YS	1	1					KE80C055G31	<PS-MNET-YS>	
412	R61 991 280	REC board	REC01Y	1	1					KE80L212G03	<REC01Y>	
413	R61 064 293	Noise filter	board,coil,plate	1	1					KE80C892G11	<Noise filter>	
414	R61 094 246	Terminal block		1	1					KR73G210H01	<TB1>	
415	R61 097 246	Terminal block		1	1					KR75G213H01	<TB2>	
416	R61 109 259	Reactor								KR65G207H01	<DCL>	
417	R61 105 259	Reactor								KR65G158H01	<DCL>	
418	R61 106 259	Reactor								KR65G159H01	<DCL>	
419	R61 107 259	Reactor								KR65G160H01	<DCL>	
420	R61 108 259	Reactor		1	1					KR65G161H01	<DCL>	
421	R61 052 260	Transformer	240V23.5V	1	1					P715563X01	<T04>	
422	R61 019 246	Terminal block		1	1					S436005H15	<TB08>	
423	R11 002 782	Terminal block		1	1					S436005H13	<TB09>	

MITSUBISHI ELECTRIC CORPORATION

BWE02547A (20260630)