MITSUBISHI ELECTRIC

SPLIT-TYPE, HEAT PUMP AIR CONDITIONERS

March 2024

No. OCD764

TECHNICAL DATA R410A

[Model Name]	[Service Ref.]
PUZ-A12NKA8	PUZ-A12NKA8
PUZ-A18NKA8	PUZ-A18NKA8
PUZ-A24NHA8	PUZ-A24NHA8
PUZ-A30NHA8	PUZ-A30NHA8
PUZ-A36NKA8	PUZ-A36NKA8
PUZ-A42NKA8	PUZ-A42NKA8
PUY-A12NKA8	PUY-A12NKA8
PUY-A18NKA8	PUY-A18NKA8
PUY-A24NHA8	PUY-A24NHA8
PUY-A30NHA8	PUY-A30NHA8
PUY-A36NKA8	PUY-A36NKA8
PUY-A42NKA8	PUY-A42NKA8

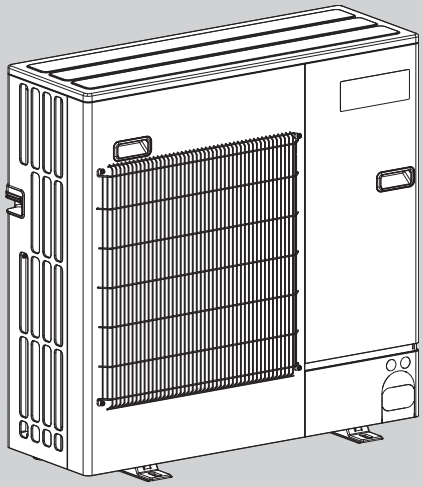

PUZ-A24/30NHA8
PUY-A24/30NHA8

CONTENTS

1. SPECIFICATION ····· 2
2. POSITION OF THE CENTER OF GRAVITY· 12
3. PERFORMANCE CURVES ····· 13
4. CORRECTION FACTORS ····· 16
5. PART LOAD CAPACITY CHART····· 18

1 SPECIFICATION

Model name	Indoor unit		PLA-A12EA8	PLA-A18EA8	PLA-A24EA8	PLA-A30EA8	PLA-A36EA8	PLA-A42EA8
	Outdoor unit		PUZ-A12NKA8	PUZ-A18NKA8	PUZ-A24NHA8	PUZ-A30NHA8	PUZ-A36NKA8	PUZ-A42NKA8
Cooling	Max. Capacity	Btu/h	12,000	18,000	24,000	30,000	36,000	42,000
	Rated Capacity	Btu/h	12,000	18,000	24,000	30,000	36,000	42,000
	Min. Capacity	Btu/h	5,900	8,000	10,000	9,000	16,000	16,000
	Total Input	W	730	1,250	1,670	2,540	2,780	3,590
	EER2	Btu/h	16.4	14.4	14.3	11.8	12.9	11.6
	SEER2	Btu/h	26.9	25.0	24.7	23.4	22.0	21.5
	Moisture Removal	Pints/h	1.2	2.4	3.0	5.4	4.5	7.9
	SHF		0.89	0.85	0.86	0.80	0.86	0.79
	Power factor	%	93.4	95.3	94.3	95.2	93.7	94.6
Heating	Max. Capacity	Btu/h	20,000	23,000	29,000	33,000	42,000	48,000
	Rated Capacity	Btu/h	14,000	19,000	26,000	32,000	38,000	45,000
	Min. Capacity	Btu/h	5,500	8,000	9,000	9,000	17,800	18,000
	Total Input	W	830	1,300	1,750	2,400	2,540	3,290
	COP	W/W	4.94	4.28	4.35	3.90	4.30	4.00
	HSPF2(IV/V)	Btu/h/W	10.9/8.0	9.2/7.0	9.3/7.3	9.5/7.6	9.3/7.3	9.4/7.6
	Power factor	%	95.0	95.8	95.1	95.7	93.6	94.1
Heating at low ambient	Rated Capacity	Btu/h	10,100	11,000	14,900	18,100	22,000	28,000
	Total Input	W	1,170	1,300	1,600	1,880	2,490	3,070
	COP	W/W	2.50	2.40	2.70	2.80	2.50	2.60
Power supply	Phase,Cycle,Voltage		1 phase, 60 Hz, 208/230 V					
	Breaker size	A	20		25		30	
Voltage	Indoor - Outdoor S1-S2		AC208 V / 230 V					
	Indoor - Outdoor S2-S3		DC24 V					
	Indoor - Remote controller		DC12 V					
Indoor unit	MCA	A	1					
	MOCP	A	15					
	Fan Motor Output	W	50		120			
	Air flow (Lo-M2-M1-Hi)	DRY(CFM)	370-460-490-530	460-490-570-600	530-640-710-810	570-670-780-880	670-850-1020-1200	740-920-1060-1200
		WET(CFM)	330-420-450-490	420-450-530-560	490-600-670-770	530-630-740-840	630-810-980-1160	700-880-1020-1160
	External Pressure	in. WG [Pa]	0					
	Sound Level (Lo-M2-M1-Hi)	dB (A)	26-27-29-30	28-29-31-32	28-30-33-36	28-32-35-38	32-37-41-44	34-38-42-45
	External Finish		White Munsell 1.0Y 9.2/0.2				White Munsell 6.4Y 8.9/0.4	
	Dimensions	W: mm [inch]	840 (950) [33-1/16 (37-13/32)]					
		D: mm [inch]	840 (950) [33-1/16 (37-13/32)]					
		H: mm [inch]	258 (40) [10-3/16 (1-9/16)]		298 (40) [11-3/4 (1-9/16)]			
	Weight	kg	21		25			
	Unit	lbs	46		56			
	Field Drain pipe size	mm [inch]	32 [1-1/4]					
Remote Controller			Attached in indoor unit					
Outdoor unit	MCA	A	17		23		29	
	MOCP	A	28		37		47	
	Fan Motor Output	W	46		74			
	Compressor	Type	SNB092FQCMC	SNB130FACMC-L1	SNB172FWHM1		MNB33FBRMC-L	
	Air flow	CFM	1,590		1,940		3,880	
	Refrigerant Control		Electronic Expansion Valve					
	Defrost Method		Reverse Cycle					
	Sound level at cooling	dB (A)	44		47		52	
	Sound level at heating	dB (A)	46		48		53	
	External finish		Ivory Munsell 3Y 7.8/1.1					
	Dimension	W: mm [inch]	809+62 [31-27/32 + 2-7/16]		950 [37-13/32]		1,050 [41-11/32]	
		D: mm [inch]	300 [11-13/16]		330 + 25 [12-63/64+63/64]			
		H: mm [inch]	630 [24-51/64]		943 [37-1/8]		1,346 [52-63/64]	
	Weight	kg [lbs]	42 [93]	45 [100]	69 [153]		99 [218]	
Refrigerant	Type		R410A					
	Charge	kg [lbs,oz]	2.0 [4 lbs 7 oz]	2.2 [4 lbs 14 oz]	3.5 [7 lbs 11 oz]		4.7 [10 lbs 6 oz]	
	Oil	L [oz]	0.35 (FV50S) [12]	0.50 (FV50S) [16]	0.70 (FV50S) [23]		1.40 (FV50S) [45]	
Refrigerant Pipe	Gas side O.D.	mm [inch]	12.7 [1/2F]		15.88 [5/8F]			
	Liquid side O.D.	mm [inch]	6.35 [1/4F]		9.52 [3/8F]			
Refrigerant pipe length	Height difference		Max. 30 m [Max.100 ft]					
	Length		Max. 30 m [Max.100 ft]		Max. 50 m [Max.165 ft]			
Refrigerant piping			Not Supplied					
Connection Method			Flared					

Notes: 1. Rating conditions (cooling)-Indoor: D.B. 26.7°C (80°F), W.B. 19.4°C (67°F) Outdoor : D.B. 35°C (95°F), W.B. 23.9°C (75°F)
(heating)-Indoor: D.B. 21.1°C (70°F), W.B. 15.6°C (60°F) Outdoor : D.B. 8.3°C (47°F), W.B. 6.1°C (43°F)
2. Rating conditions (heating)-Indoor: D.B. 21.1°C (70°F), W.B. 15.6°C (60°F) Outdoor : D.B. -8.3°C (17°F), W.B. -9.4°C (15°F)

Operating range

		Indoor intake air temperature	Outdoor intake air temperature
Cooling	Maximum	D.B. 32°C (90°F), W.B. 23°C (73°F)	D.B. 46ºC (115ºF)
	Minimum	D.B. 19ºC (66ºF), W.B. 15ºC (59ºF)	D.B. -5ºC (23ºF) / -18ºC (0ºF)*
Heating	Maximum	D.B. 28ºC (82ºF)	D.B. 21ºC (70ºF), W.B. 15ºC (59ºF)
	Minimum	D.B. 10ºC (50ºF)	D.B. -20ºC (-4ºF), W.B. -20ºC (-4ºF)

* In case that the wind baffle is installed. (In case that the wind baffle is not installed, the minimum temperature will be -5°C (23°F) DB.)

Model name	Indoor unit		PLA-A12EA8	PLA-A18EA8	PLA-A24EA8	PLA-A30EA8	PLA-A36EA8	PLA-A42EA8
	Outdoor unit		PUY-A12NKA8	PUY-A18NKA8	PUY-A24NHA8	PUY-A30NHA8	PUY-A36NKA8	PUY-A42NKA8
Cooling	Max. Capacity	Btu/h	12,000	18,000	24,000	30,000	36,000	42,000
	Rated Capacity	Btu/h	12,000	18,000	24,000	30,000	36,000	42,000
	Min. Capacity	Btu/h	5,900	8,000	10,000	9,000	16,000	16,000
	Total Input	W	730	1,250	1,670	2,540	2,780	3,590
	EER2	Btu/h	16.4	14.4	14.3	11.8	12.9	11.6
	SEER2	Btu/h	26.9	25.0	24.7	23.4	22.0	21.5
	Moisture Removal	Pints/h	1.2	2.4	3.0	5.4	4.5	7.9
	SHF		0.89	0.85	0.86	0.80	0.86	0.79
	Power factor	%	93.4	95.3	94.3	95.2	93.7	94.6
Heating	Max. Capacity	Btu/h	-	-	-	-	-	-
	Rated Capacity	Btu/h	-	-	-	-	-	-
	Min. Capacity	Btu/h	-	-	-	-	-	-
	Total Input	W	-	-	-	-	-	-
	COP	W/W	-	-	-	-	-	-
	HSPF2(IV/V)	Btu/h/W	-	-	-	-	-	-
	Power factor	%	-	-	-	-	-	-
Heating at low ambient	Rated Capacity	Btu/h	-	-	-	-	-	-
	Total Input	W	-	-	-	-	-	-
	COP	W/W	-	-	-	-	-	-
Power supply	Phase,Cycle,Voltage		1 phase, 60 Hz, 208/230 V					
	Breaker size	A	20		25		30	
Voltage	Indoor - Outdoor S1-S2		AC208 V / 230 V					
	Indoor - Outdoor S2-S3		DC24 V					
	Indoor - Remote controller		DC12 V					
Indoor unit	MCA	A	1					
	MOCP	A	15					
	Fan Motor Output	W	50		120			
	Air flow (Lo-M2-M1-Hi)	DRY (CFM)	370-460-490-530	460-490-570-600	530-640-710-810	570-670-780-880	670-850-1020-1200	740-920-1060-1200
		WET (CFM)	330-420-450-490	420-450-530-560	490-600-670-770	530-630-740-840	630-810-980-1160	700-880-1020-1160
	External Pressure	in. WG [Pa]	0					
	Sound Level (Lo-M2-M1-Hi)	dB (A)	26-27-29-30	28-29-31-32	28-30-33-36	28-32-35-38	32-37-41-44	34-38-42-45
	External Finish		White Munsell 1.0Y 9.2/0.2				White Munsell 6.4Y 8.9/0.4	
	Dimensions	W: mm [inch]	840 (950) [33-1/16 (37-13/32)]					
		D: mm [inch]	840 (950) [33-1/16 (37-13/32)]					
		H: mm [inch]	258 (40) [10-3/16 (1-9/16)]		298 (40) [11-3/4 (1-9/16)]			
	Weight	kg	21		25			
	Unit	lbs	46		56			
	Field Drain pipe size	mm [inch]	32 [1-1/4]					
Remote Controller			Attached in indoor unit					
Outdoor unit	MCA	A	17		23		29	
	MOCP	A	28		37		47	
	Fan Motor Output	W	46		74			
	Compressor	Type	SNB092FQCMC	SNB130FACMC-L1	SNB172FWHM1		MNB33FBRMC-L	
	Air flow	CFM	1,590		1,940		3,880	
	Refrigerant Control		Electronic Expansion Valve					
	Defrost Method		-					
	Sound level at cooling	dB (A)	44		47		52	
	Sound level at heating	dB (A)	-		-		-	
	External finish		Ivory Munsell 3Y 7.8/1.1					
	Dimension	W: mm [inch]	809+62 [31-27/32 + 2-7/16]		950 [37-13/32]		1,050 [41-11/32]	
		D: mm [inch]	300 [11-13/16]		330 + 25 [12-63/64+63/64]			
		H: mm [inch]	630 [24-51/64]		943 [37-1/8]		1,346 [52-63/64]	
	Weight	kg [lbs]	41 [92]	44 [99]	68 [151]		99 [218]	
Refrigerant	Type		R410A					
	Charge	kg [lbs,oz]	2.0 [4 lbs 7 oz]	2.2 [4 lbs 14 oz]	3.5 [7 lbs 11 oz]		4.7 [10 lbs 6 oz]	
	Oil	L [oz]	0.35 (FV50S) [12]	0.50 (FV50S) [16]	0.70 (FV50S) [23]		1.40 (FV50S) [45]	
Refrigerant Pipe	Gas side O.D.	mm [inch]	12.7 [1/2]		15.88 [5/8F]			
	Liquid side O.D.	mm [inch]	6.35 [1/4]		9.52 [3/8F]			
Refrigerant pipe length	Height difference		Max. 30 m [Max.100 ft]					
	Length		Max. 50 m [Max.165 ft]		Max. 69 m [Max.225 ft]		Max. 50 m [Max.165 ft]	
Refrigerant piping			Not Supplied					
Connection Method			Flared					

Notes: 1.Rating conditions (cooling)-Indoor: D.B. 26.7°C (80°F), W.B. 19.4°C (67°F) Outdoor : D.B. 35°C (95°F), W.B. 23.9°C (75°F)

Operating range

		Indoor intake air temperature	Outdoor intake air temperature
Cooling	Maximum	D.B. 32°C (90°F), W.B. 23°C (73°F)	D.B. 46°C (115°F)
	Minimum	D.B. 19°C (66°F), W.B. 15°C (59°F)	D.B.-5°C (23°F) / -28.9°C (-20°F)*

* In case that the wind baffle is installed. (In case that the wind baffle is not installed, the minimum temperature will be -5°C (23°F) DB.)

Model name	Indoor unit		PKA-A12LA1	PKA-A18LA1	PKA-A24KA8	PKA-A30KA8	PKA-A36KA8
	Outdoor unit		PUZ-A12NKA8	PUZ-A18NKA8	PUZ-A24NHA8	PUZ-A30NHA8	PUZ-A36NKA8
Cooling	Max. Capacity	Btu/h	12,000	18,000	24,000	30,000	36,000
	Rated Capacity	Btu/h	12,000	18,000	24,000	30,000	36,000
	Min. Capacity	Btu/h	4,400	5,600	10,000	9,000	16,000
	Total Input	W	900	1,680	1,960	3,150	3,330
	EER2	Btu/h	13.3	10.7	12.2	9.5	10.8
	SEER2	Btu/h	21.3	20.2	21.3	20.0	19.4
	Moisture Removal	Pints/h	2.7	5.8	5.0	8.1	9.7
	SHF		0.75	0.64	0.77	0.70	0.70
	Power factor	%	94.5	95.3	95.7	96.4	96.5
Heating	Max. Capacity	Btu/h	18,000	22,000	28,000	34,000	40,000
	Rated Capacity	Btu/h	14,000	19,000	26,000	32,000	38,000
	Min. Capacity	Btu/h	4,400	5,400	9,000	8,900	17,000
	Total Input	W	1,030	1,640	1,750	2,460	2,460
	COP	W/W	3.90	3.40	4.35	3.81	4.50
	HSPF2(IV/V)	Btu/h/W	10.2/8.3	9.2/7.7	9.3/7.5	8.8/7.1	8.4/7.0
	Power factor	%	93.9	94.2	96.3	96.4	95.5
Heating at low ambient	Rated Capacity	Btu/h	10,600	13,600	15,700	18,300	22,300
	Total Input	W	1,200	1,580	1,810	2,020	2,820
	COP	W/W	2.50	2.50	2.50	2.60	2.30
Power supply	Phase,Cycle,Voltage		1 phase, 60 Hz, 208/230 V				
	Breaker size	A	15		25		30
Voltage	Indoor - Outdoor S1-S2		AC208 V / 230 V				
	Indoor - Outdoor S2-S3		DC24 V				
	Indoor - Remote controller		DC12 V				
Indoor unit	MCA	A	1				
	MOCP	A	15				
	Fan Motor Output	W	30		56		69
	Air flow (Lo-M2-M1-Hi) / (Lo-Mid-Hi)	DRY(CFM)	265 - 290 - 325 - 385	265 - 310 - 375 - 450	635 - 705 - 775		705 - 810 - 920
		WET(CFM)	215 - 255 - 320 - 375	215 - 255 - 320 - 375	570 - 635 - 700		635 - 730 - 830
	External Pressure	in. WG [Pa]	0				
	Sound Level (Lo-M2-M1-Hi) / (Lo-Mid-Hi)	DRY dB (A)	34 - 37 - 40 - 43	34 - 39 - 44 - 48	39 - 42 - 45		43 - 46 - 49
		WET dB (A)	34 - 39 - 44 - 48	34 - 39 - 44 - 48			
	External Finish		White Munsell 0.7PB 9.2/0.4		White Munsell 1.0Y 9.2/0.2		White Munsell 6.4Y 8.9/0.4
	Dimensions	W: mm [inch]	898 [35-23/64]		1,170 [46-1/16]		
		D: mm [inch]	237 [9-11/32]		295 [11-5/8]		
		H: mm [inch]	299 [11-25/32]		365 [14-3/8]		
	Weight	kg [lbs]	12.7 [28]		21 [46]		
	Field Drain pipe size	mm [inch]	16 [5/8]		16 [5/8]		
Remote Controller			Attached in indoor unit				
Outdoor unit	MCA	A	17		23		29
	MOCP	A	28		37		47
	Fan Motor Output	W	46		74		
	Compressor	Type	SNB092FQCMC	SNB130FACMC-L1	SNB172FWHM1		MNB33FBRMC-L
	Air flow	CFM	1,590		1,940		3,880
	Refrigerant Control		Electronic Expansion Valve				
	Defrost Method		Reverse Cycle				
	Sound level at cooling	dB (A)	44		47		52
	Sound level at heating	dB (A)	46		48		53
	External finish		Ivory Munsell 3Y 7.8/1.1				
	Dimension	W: mm [inch]	809+62 [31-27/32 + 2-7/16]		950 [37-13/32]		1,050 [41-11/32]
		D: mm [inch]	300 [11-13/16]		330 + 25 [12-63/64+63/64]		
		H: mm [inch]	630 [24-51/64]		943 [37-1/8]		1,346 [52-63/64]
	Weight	kg [lbs]	42 [93]	45 [100]	69 [153]		99 [218]
Refrigerant	Type		R410A				
	Charge	kg [lbs,oz]	2.0 [4 lbs 7 oz]	2.2 [4 lbs 14 oz]	3.5 [7 lbs 11 oz]		4.7 [10 lbs 6 oz]
	Oil	L [oz]	0.35 (FV50S) [12]	0.50 (FV50S) [16]	0.70 (FV50S) [23]		1.40 (FV50S) [45]
Refrigerant Pipe	Gas side O.D.	mm [inch]	12.7 [1/2F]		15.88 [5/8F]		
	Liquid side O.D.	mm [inch]	6.35 [1/4F]		9.52 [3/8F]		
Refrigerant pipe length	Height difference		Max. 30 m [Max.100 ft]				
	Length		Max. 30 m [Max.100 ft]		Max. 50 m [Max.165 ft]		
Refrigerant piping			Not Supplied				
Connection Method			Flared				

Notes: 1 Rating conditions (cooling)-Indoor: D.B. 26.7°C(80°F), W.B. 19.4°C(67°F) Outdoor : D.B. 35°C(95°F), W.B. 23.9°C(75°F)
(heating)-Indoor: D.B. 21.1°C(70°F), W.B. 15.6°C(60°F) Outdoor : D.B. 8.3°C(47°F), W.B. 6.1°C(43°F)
2 Rating conditions (heating)-Indoor: D.B. 21.1°C(70°F), W.B. 15.6°C(60°F) Outdoor : D.B. -8.3°C(17°F), W.B. -9.4°C(15°F)

Operating range

		Indoor intake air temperature	Outdoor intake air temperature
Cooling	Maximum	D.B. 32°C (90°F), W.B. 23°C (73°F)	D.B. 46ºC (115ºF)
	Minimum	D.B. 19ºC (66ºF), W.B. 15ºC (59ºF)	D.B. -5ºC (23ºF) / -18ºC (0ºF)*
Heating	Maximum	D.B. 28ºC (82ºF)	D.B. 21ºC (70ºF), W.B. 15ºC (59ºF)
	Minimum	D.B. 10ºC (50ºF)	D.B. -20ºC (-4ºF), W.B. -20ºC (-4ºF)

* In case that the wind baffle is installed. (In case that the wind baffle is not installed, the minimum temperature will be -5°C (23°F) DB.)

Model name	Indoor unit		PKA-A12LA1	PKA-A18LA1	PKA-A24KA8	PKA-A30KA8	PKA-A36KA8
	Outdoor unit		PUY-A12NKA8	PUY-A18NKA8	PUY-A24NHA8	PUY-A30NHA8	PUY-A36NKA8
Cooling	Max. Capacity	Btu/h	12,000	18,000	24,000	30,000	36,000
	Rated Capacity	Btu/h	12,000	18,000	24,000	30,000	36,000
	Min. Capacity	Btu/h	4,400	5,600	10,000	9,000	16,000
	Total Input	W	900	1,680	1,960	3,150	3,330
	EER2	Btu/h	13.3	10.7	12.2	9.5	10.8
	SEER2	Btu/h	21.3	20.2	21.3	20.0	19.4
	Moisture Removal	Pints/h	2.7	5.8	5.0	8.1	9.7
	SHF		0.75	0.64	0.77	0.70	0.70
	Power factor	%	94.5	95.3	95.7	96.4	96.5
Heating	Max. Capacity	Btu/h	-	-	-	-	-
	Rated Capacity	Btu/h	-	-	-	-	-
	Min. Capacity	Btu/h	-	-	-	-	-
	Total Input	W	-	-	-	-	-
	COP	W/W	-	-	-	-	-
	HSPF2(IV/V)	Btu/h/W	-	-	-	-	-
	Power factor	%	-	-	-	-	-
Heating at low ambient	Rated Capacity	Btu/h	-	-	-	-	-
	Total Input	W	-	-	-	-	-
	COP	W/W	-	-	-	-	-
Power supply	Phase,Cycle,Voltage		1 phase, 60 Hz, 208/230 V				
	Breaker size	A	15		25		30
Voltage	Indoor - Outdoor S1-S2		AC208 V / 230 V				
	Indoor - Outdoor S2-S3		DC24 V				
	Indoor - Remote controller		DC12 V				
Indoor unit	MCA	A	1				
	MOCP	A	15				
	Fan Motor Output	W	30		56		69
	Air flow (Lo-M2-M1-Hi) / (Lo-Mid-Hi)	DRY(CFM)	265 - 290 - 325 - 385	265 - 310 - 375 - 450	635 - 705 - 775		705 - 810 - 920
		WET(CFM)	215 - 255 - 320 - 375	215 - 255 - 320 - 375	570 - 635 - 700		635 - 730 - 830
	External Pressure	in. WG [Pa]	0				
	Sound Level (Lo-M2-M1-Hi) / (Lo-Mid-Hi)	DRY dB (A)	34 - 37 - 40 - 43	34 - 39 - 44 - 48	39 - 42 - 45		43 - 46 - 49
		WET dB (A)	34 - 39 - 44 - 48	34 - 39 - 44 - 48			
	External Finish		White Munsell 0.7PB 9.2/0.4		White Munsell 1.0Y 9.2/0.2		White Munsell 6.4Y 8.9/0.4
	Dimensions	W: mm [inch]	898 [35-23/64]		1,170 [46-1/16]		
		D: mm [inch]	237 [9-11/32]		295 [11-5/8]		
		H: mm [inch]	299 [11-25/32]		365 [14-3/8]		
	Weight	kg [lbs]	12.7 [28]		21 [46]		
	Field Drain pipe size	mm [inch]	16 [5/8]		16 [5/8]		
Remote Controller			Attached in indoor unit				
Outdoor unit	MCA	A	11		19		29
	MOCP	A	28		26		47
	Fan Motor Output	W	46		86		
	Compressor	Type	SNB092FNCM	SNB130FNCM2	SNB172FWHM1		MNB33FBRMC-L
	Air flow	CFM	1,590		1,940		3,880
	Refrigerant Control		Electronic Expansion Valve				
	Defrost Method		-				
	Sound level at cooling	dB (A)	44		47		52
	Sound level at heating	dB (A)	-		-		-
	External finish		Ivory Munsell 3Y 7.8/1.1				
	Dimension	W: mm [inch]	809+62 [31-27/32 + 2-7/16]		950 [37-13/32]		1,050 [41-11/32]
		D: mm [inch]	300 [11-13/16]		330 + 25 [12-63/64+63/64]		
		H: mm [inch]	630 [24-51/64]		943 [37-1/8]		1,346 [52-63/64]
	Weight	kg [lbs]	41 [92]	44 [99]	68 [151]		99 [218]
Refrigerant	Type		R410A				
	Charge	kg [lbs,oz]	2.0 [4 lbs 7 oz]	2.2 [4 lbs 14 oz]	3.5 [7 lbs 11 oz]		4.7 [10 lbs 6 oz]
	Oil	L [oz]	0.35 (FV50S) [12]	0.50 (FV50S) [16]	0.70 (FV50S) [23]		1.40 (FV50S) [45]
Refrigerant Pipe	Gas side O.D.	mm [inch]	12.7 [1/2F]		15.88 [5/8F]		
	Liquid side O.D.	mm [inch]	6.35 [1/4F]		9.52 [3/8F]		
Refrigerant pipe length	Height difference		Max. 30 m [Max.100 ft]				
	Length		Max. 50 m [Max.165 ft]		Max. 69 m [Max.225 ft]		Max. 50 m [Max.165 ft]
Refrigerant piping			Not Supplied				
Connection Method			Flared				

Notes: 1 Rating conditions (cooling)-Indoor: D.B. 26.7°C(80°F), W.B. 19.4°C(67°F) Outdoor : D.B. 35°C(95°F), W.B. 23.9°C(75°F)

Operating range

		Indoor intake air temperature	Outdoor intake air temperature
Cooling	Maximum	D.B. 32°C (90°F), W.B. 23°C (73°F)	D.B. 46°C(115°F)
	Minimum	D.B. 19°C (66°F), W.B. 15°C (59°F)	D.B.-5°C (23°F) / -28.9°C (-20°F)*

* In case that the wind baffle is installed. (In case that the wind baffle is not installed, the minimum temperature will be -5°C (23°F) DB.)

Model name	Indoor unit		PCA-A24KA8	PCA-A30KA8	PCA-A36KA8	PCA-A42KA8
	Outdoor unit		PUZ-A24NHA8	PUZ-A30NHA8	PUZ-A36NKA8	PUZ-A42NKA8
Cooling	Max. Capacity	Btu/h	24,000	30,000	36,000	42,000
	Rated Capacity	Btu/h	24,000	30,000	36,000	42,000
	Min. Capacity	Btu/h	10,000	9,000	16,000	16,000
	Total Input	W	1,960	3,190	3,270	4,180
	EER2	Btu/h	12.2	9.4	11.0	10.0
	SEER2	Btu/h	21.0	19.8	19.5	17.7
	Moisture Removal	Pints/h	5.8	8.3	8.7	11.7
	SHF		0.73	0.69	0.73	0.69
	Power factor	%	94.7	96.3	94.2	95.6
Heating	Max. Capacity	Btu/h	28,000	34,000	40,000	48,000
	Rated Capacity	Btu/h	26,000	32,000	38,000	45,000
	Min. Capacity	Btu/h	8,800	8,600	18,000	15,700
	Total Input	W	1,800	2,520	2,410	3,480
	COP	W/W	4.23	3.72	4.60	3.80
	HSPF2(IV/V)	Btu/h/W	9.2/7.3	9.2/7.5	8.9/7.2	9.4/7.8
	Power factor	%	94.3	96.1	92.7	94.6
Heating at low ambient	Rated Capacity	Btu/h	15,400	18,800	21,200	28,200
	Total Input	W	1,730	2,100	2,440	3,080
	COP	W/W	2.60	2.60	2.50	2.60
Power supply	Phase,Cycle,Voltage		1 phase, 60 Hz, 208/230 V			
	Breaker size	A	15		30	
Voltage	Indoor - Outdoor S1-S2		AC208 V / 230 V			
	Indoor - Outdoor S2-S3		DC24 V			
	Indoor - Remote controller		DC12 V			
Indoor unit	MCA	A	1		2	
	MOCP	A	15			
	Fan Motor Output	W	95		160	
	Air flow (Lo-M2-M1-Hi)	DRY(CFM)	530 - 565 - 600 - 670	565 - 600 - 635 - 705	775 - 850 - 920 - 990	810 - 885 - 955 - 1025
		WET(CFM)	495 - 530 - 565 - 635	530 - 565 - 600 - 670	705 - 775 - 850 - 920	740 - 810 - 885 - 955
	External Pressure	in. WG [Pa]	0			
	Sound Level (Lo-M2-M1-Hi)	dB (A)	33 - 35 - 37 - 40	35 - 37 - 39 - 41	37 - 39 - 41 - 43	39 - 41 - 43 - 45
	External Finish		White Munsell 6.4Y 8.9/0.4			
	Dimensions	W: mm [inch]	1,280 [50-3/8]		1,600 [63]	
		D: mm [inch]	680 [26-3/4]			
		H: mm [inch]	230 [9-1/16]			
	Weight	kg [lbs]	32 [71]		36 [79]	39 [86]
	Field Drain pipe size	mm [inch]	26 [1-1/32]			
Remote Controller			Attached in Indoor Unit			
Outdoor unit	MCA	A	23		29	
	MOCP	A	37		47	
	Fan Motor Output	W	74			
	Compressor	Type	SNB172FWHM1		MNB33FBRMC-L	
	Air flow	CFM	1,940		3,880	
	Refrigerant Control		Electronic Expansion Valve			
	Defrost Method		Reverse Cycle			
	Sound level at cooling	dB (A)	47		52	
	Sound level at heating	dB (A)	48		53	
	External finish		Ivory Munsell 3Y 7.8/1.1			
	Dimension	W: mm [inch]	950 [37-13/32]		1,050 [41-11/32]	
		D: mm [inch]	330 + 25 [12-63/64+63/64]			
		H: mm [inch]	943 [37-1/8]		1,346 [52-63/64]	
	Weight	kg [lbs]	69 [153]		99 [218]	
Refrigerant	Type		R410A			
	Charge	kg [lbs,oz]	3.5 [7 lbs 11 oz]		4.7 [10 lbs 6 oz]	
	Oil	L [oz]	0.70 (FV50S) [23]		1.40 (FV50S) [45]	
Refrigerant Pipe	Gas side O.D.	mm [inch]	15.88 [5/8F]			
	Liquid side O.D.	mm [inch]	9.52 [3/8F]			
Refrigerant pipe length	Height difference		Max. 30 m [Max.100 ft]			
	Length		Max. 50 m [Max.165 ft]			
Refrigerant piping			Not Supplied			
Connection Method			Flared			

Notes: 1.Rating conditions (cooling)-Indoor: D.B. 26.7°C(80°F), W.B. 19.4°C(67°F) Outdoor : D.B. 35°C(95°F), W.B. 23.9°C(75°F)
(heating)-Indoor: D.B. 21.1°C(70°F), W.B. 15.6°C(60°F) Outdoor : D.B. 8.3°C(47°F), W.B. 6.1°C(43°F)
2.Rating conditions (heating)-Indoor: D.B. 21.1°C(70°F), W.B. 15.6°C(60°F) Outdoor : D.B. -8.3°C(17°F), W.B. -9.4°C(15°F)

Operating range

		Indoor intake air temperature	Outdoor intake air temperature
Cooling	Maximum	D.B. 32°C (90°F), W.B. 23°C (73°F)	D.B. 46ºC (115ºF)
	Minimum	D.B. 19ºC (66ºF), W.B. 15ºC (59ºF)	D.B. -5ºC (23ºF) / -18ºC (0ºF)*
Heating	Maximum	D.B. 28ºC (82ºF)	D.B. 21ºC (70ºF), W.B. 15ºC (59ºF)
	Minimum	D.B. 10ºC (50ºF)	D.B. -20ºC (-4ºF), W.B. -20ºC (-4ºF)

* In case that the wind baffle is installed. (In case that the wind baffle is not installed, the minimum temperature will be -5°C (23°F) DB.)

Model name	Indoor unit		PCA-A24KA8	PCA-A30KA8	PCA-A36KA8	PCA-A42KA8
	Outdoor unit		PUY-A24NHA8	PUY-A30NHA8	PUY-A36NKA8	PUY-A42NKA8
Cooling	Max. Capacity	Btu/h	24,000	30,000	36,000	42,000
	Rated Capacity	Btu/h	24,000	30,000	36,000	42,000
	Min. Capacity	Btu/h	10,000	9,000	16,000	16,000
	Total Input	W	1,960	3,190	3,270	4,180
	EER2	Btu/h	12.2	9.4	11.0	10.0
	SEER2	Btu/h	21.0	19.8	19.5	17.7
	Moisture Removal	Pints/h	5.8	8.3	8.7	11.7
	SHF		0.73	0.69	0.73	0.69
	Power factor	%	94.7	96.3	94.2	95.6
Heating	Max. Capacity	Btu/h	-	-	-	-
	Rated Capacity	Btu/h	-	-	-	-
	Min. Capacity	Btu/h	-	-	-	-
	Total Input	W	-	-	-	-
	COP	W/W	-	-	-	-
	HSPF2(IV/V)	Btu/h/W	-	-	-	-
	Power factor	%	-	-	-	-
Heating at low ambient	Rated Capacity	Btu/h	-	-	-	-
	Total Input	W	-	-	-	-
	COP	W/W	-	-	-	-
Power supply	Phase,Cycle,Voltage		1 phase, 60 Hz, 208/230 V			
	Breaker size	A	15		30	
Voltage	Indoor - Outdoor S1-S2		AC208 V / 230 V			
	Indoor - Outdoor S2-S3		DC24 V			
	Indoor - Remote controller		DC12 V			
Indoor unit	MCA	A	1		2	
	MOCP	A	15			
	Fan Motor Output	W	95		160	
	Air flow (Lo-M2-M1-Hi)	DRY(CFM)	530 - 565 - 600 - 670	565 - 600 - 635 - 705	775 - 850 - 920 - 990	810 - 885 - 955 - 1025
		WET(CFM)	495 - 530 - 565 - 635	530 - 565 - 600 - 670	705 - 775 - 850 - 920	740 - 810 - 885 - 955
	External Pressure	in. WG [Pa]	0			
	Sound Level (Lo-M2-M1-Hi)	dB (A)	33 - 35 - 37 - 40	35 - 37 - 39 - 41	37 - 39 - 41 - 43	39 - 41 - 43 - 45
	External Finish		White Munsell 6.4Y 8.9/0.4			
	Dimensions	W: mm [inch]	1,280 [50-3/8]		1,600 [63]	
		D: mm [inch]	680 [26-3/4]			
		H: mm [inch]	230 [9-1/16]			
	Weight	kg [lbs]	32 [71]		36 [79]	39 [86]
	Field Drain pipe size	mm [inch]	26 [1-1/32]			
Remote Controller			Attached in Indoor Unit			
Outdoor unit	MCA	A	23		29	
	MOCP	A	37		47	
	Fan Motor Output	W	74			
	Compressor	Type	SNB172FWHM1		MNB33FBRMC-L	
	Air flow	CFM	1,940		3,880	
	Refrigerant Control		Electronic Expansion Valve			
	Defrost Method		-			
	Sound level at cooling	dB (A)	47		52	
	Sound level at heating	dB (A)	-		-	
	External finish		Ivory Munsell 3Y 7.8/1.1			
	Dimension	W: mm [inch]	950 [37-13/32]		1,050 [41-11/32]	
		D: mm [inch]	330 + 25 [12-63/64+63/64]			
		H: mm [inch]	943 [37-1/8]		1,346 [52-63/64]	
	Weight	kg [lbs]	68 [151]		99 [218]	
Refrigerant	Type		R410A			
	Charge	kg [lbs,oz]	3.5 [7 lbs 11 oz]		4.7 [10 lbs 6 oz]	
	Oil	L [oz]	0.70 (FV50S) [23]		1.40 (FV50S) [45]	
Refrigerant Pipe	Gas side O.D.	mm [inch]	15.88 [5/8F]			
	Liquid side O.D.	mm [inch]	9.52 [3/8F]			
Refrigerant pipe length	Height difference		Max. 30 m [Max.100 ft]			
	Length		Max. 69 m [Max.225 ft]		Max. 50 m [Max.165 ft]	
Refrigerant piping			Not Supplied			
Connection Method			Flared			

Notes: 1. Rating conditions (cooling)-Indoor: D.B. 26.7°C (80°F), W.B. 19.4°C (67°F) Outdoor : D.B. 35°C (95°F), W.B. 23.9°C (75°F)
Operating range

		Indoor intake air temperature	Outdoor intake air temperature
Cooling	Maximum	D.B. 32°C (90°F), W.B. 23°C (73°F)	D.B. 46°C (115°F)
	Minimum	D.B. 19°C (66°F), W.B. 15°C (59°F)	D.B.-5°C (23°F) / -28.9°C (-20°F)*

* In case that the wind baffle is installed. (In case that the wind baffle is not installed, the minimum temperature will be -5°C (23°F) DB.)

Model name	Indoor unit		PEAD-A12AA8	PEAD-A18AA8	PEAD-A24AA8	PEAD-A30AA8	PEAD-A36AA9	PEAD-A42AA9
	Outdoor unit		PUZ-A12NKA8	PUZ-A18NKA8	PUZ-A24NHA8	PUZ-A30NHA8	PUZ-A36NKA8	PUZ-A42NKA8
Cooling	Max. Capacity	Btu/h	12,000	18,000	24,000	30,000	36,000	42,000
	Rated Capacity	Btu/h	12,000	18,000	24,000	30,000	36,000	42,000
	Min. Capacity	Btu/h	4,700	7,700	9,600	8,700	15,600	16,000
	Total Input	W	890	1,670	1,960	2,960	2,910	4,110
	EER2	Btu/h	13.4	10.7	12.2	10.1	12.3	10.7
	SEER2	Btu/h	21.3	19.6	20.0	19.2	20.0	18.6
	Moisture Removal	Pints/h	1.8	3.7	6.9	8.6	8.1	9.0
	SHF		0.83	0.77	0.68	0.68	0.75	0.76
	Power factor	%	90.9	91.4	92.8	93.8	93.0	93.0
Heating	Max. Capacity	Btu/h	18,000	22,000	28,000	34,000	40,000	48,000
	Rated Capacity	Btu/h	14,000	19,000	26,000	31,000	38,000	45,000
	Min. Capacity	Btu/h	5,500	7,600	9,600	9,200	18,800	15,300
	Total Input	W	1,090	1,460	1,790	2,550	2,440	3,340
	COP	W/W	3.70	3.80	4.20	3.60	4.50	3.90
	HSPF2(IV/V)	Btu/h/W	9.8/7.9	9.0/7.1	9.2/7.4	9.3/7.6	9.0/7.1	9.3/7.6
	Power factor	%	91.4	92.0	92.8	93.3	92.0	93.0
Heating at low ambient	Rated Capacity	Btu/h	9,000	11,500	15,800	19,000	21,200	27,600
	Total Input	W	840	1,370	1,730	2,010	2,350	3,040
	COP	W/W	2.80	2.40	2.50	2.60	2.60	2.60
Power supply	Phase,Cycle,Voltage		1 phase, 60 Hz, 208/230 V					
	Breaker size	A	20		25		30	
Voltage	Indoor - Outdoor S1-S2		AC208 V / 230 V					
	Indoor - Outdoor S2-S3		DC24 V					
	Indoor - Remote controller		DC12 V					
Indoor unit	MCA	A	1.45	1.69	2.63	2.73	3.50	4.25
	MOCP	A	15					
	Fan Motor Output	W	85		121		300	
	Air flow (Lo-Mid-Hi)	DRY(CFM)	353 - 424 - 494	424 - 512 - 600	512 - 635 - 741	618 - 742 - 883	848-936-1024-1201	1042-1148-1254-1483
		WET(CFM)	313 - 384 - 454	384 - 472 - 560	472 - 595 - 701	578 - 702 - 843		
	External Pressure	in. WG [Pa]	0.14 - 0.20 - 0.28 - 0.40 - 0.60 [35 - 50 - 70 - 100 - 150]					
	Sound Level (Lo-Mid-Hi)	dB (A)	28 - 30 - 34	30 - 33 - 37	30 - 33 - 37	30 - 34 - 39	34 - 36 - 38 - 42	37 - 39 - 41 - 45
	External Finish		Galvanized					
	Dimensions	W: mm [inch]	900 [35-7/16]		1,100 [43-5/16]		1,400 [55-1/8]	
		D: mm [inch]	732 [28-7/8]					
		H: mm [inch]	250 [9-7/8]					
	Weight	kg [lbs]	26 [58]	28 [62]	31 [69]		37 [82]	39 [86]
	Field Drain pipe size	mm [inch]	OD. φ32 [1-1/4]					
Remote Controller			Attached in Indoor Unit					
Outdoor unit	MCA	A	17		23		29	
	MOCP	A	28		37		47	
	Fan Motor Output	W	46		74			
	Compressor	Type	SNB092FQCMC	SNB130FACMC-L1	SNB172FWHM1		MNB33FBRMC-L	
	Air flow	CFM	1,590		1,940		3,880	
	Refrigerant Control		Electronic Expansion Valve					
	Defrost Method		Reverse Cycle					
	Sound level at cooling	dB (A)	44		47		52	
	Sound level at heating	dB (A)	46		48		53	
	External finish		Ivory Munsell 3Y 7.8/1.1					
	Dimension	W: mm [inch]	809+62 [31-27/32 + 2-7/16]		950 [37-13/32]		1,050 [41-11/32]	
		D: mm [inch]	300 [11-13/16]		330 + 25 [12-63/64+63/64]			
		H: mm [inch]	630 [24-51/64]		943 [37-1/8]		1,346 [52-63/64]	
	Weight	kg [lbs]	42 [93]	45 [100]	69 [153]		99 [218]	
Refrigerant	Type		R410A					
	Charge	kg [lbs,oz]	2.0 [4 lbs 7 oz]	2.2 [4 lbs 14 oz]	3.5 [7 lbs 11 oz]		4.7 [10 lbs 6 oz]	
	Oil	L [oz]	0.35 (FV50S) [12]	0.50 (FV50S) [16]	0.70 (FV50S) [23]		1.40 (FV50S) [45]	
Refrigerant Pipe	Gas side O.D.	mm [inch]	12.7 [1/2F]		15.88 [5/8F]			
	Liquid side O.D.	mm [inch]	6.35 [1/4F]		9.52 [3/8F]			
Refrigerant pipe length	Height difference		Max. 30 m [Max.100 ft]					
	Length		Max. 30 m [Max.100 ft]		Max. 50 m [Max.165 ft]			
Refrigerant piping			Not Supplied					
Connection Method			Flared					

Notes: 1. Rating conditions (cooling)-Indoor: D.B. 26.7°C (80°F), W.B. 19.4°C (67°F) Outdoor: D.B. 35°C (95°F), W.B. 23.9°C (75°F)
(heating)-Indoor: D.B. 21.1°C (70°F), W.B. 15.6°C (60°F) Outdoor: D.B. 8.3°C (47°F), W.B. 6.1°C (43°F)
2. Rating conditions (heating)-Indoor: D.B. 21.1°C (70°F), W.B. 15.6°C (60°F) Outdoor: D.B. -8.3°C (17°F), W.B. -9.4°C (15°F)

Operating range

		Indoor intake air temperature	Outdoor intake air temperature
Cooling	Maximum	D.B. 32°C (90°F), W.B. 23°C (73°F)	D.B. 46ºC (115ºF)
	Minimum	D.B. 19ºC (66ºF), W.B. 15ºC (59ºF)	D.B. -5ºC (23ºF) / -18ºC (0ºF)*
Heating	Maximum	D.B. 28ºC (82ºF)	D.B. 21ºC (70ºF), W.B. 15ºC (59ºF)
	Minimum	D.B. 10ºC (50ºF)	D.B. -20ºC (-4ºF), W.B. -20ºC (-4ºF)

* In case that the wind baffle is installed. (In case that the wind baffle is not installed, the minimum temperature will be -5°C (23°F) DB.)

Model name	Indoor unit		PEAD-A12AA8	PEAD-A18AA8	PEAD-A24AA8	PEAD-A30AA8	PEAD-A36AA9	PEAD-A42AA9
	Outdoor unit		PUY-A12NKA8	PUY-A18NKA8	PUY-A24NHA8	PUY-A30NHA8	PUY-A36NKA8	PUY-A42NKA8
Cooling	Max. Capacity	Btu/h	12,000	18,000	24,000	30,000	36,000	42,000
	Rated Capacity	Btu/h	12,000	18,000	24,000	30,000	36,000	42,000
	Min. Capacity	Btu/h	4,700	7,700	9,600	8,700	15,600	16,000
	Total Input	W	890	1,670	1,960	2,960	2,910	4,110
	EER2	Btu/h	13.4	10.7	12.2	10.1	12.3	10.7
	SEER2	Btu/h	21.3	19.6	20.0	19.2	20.0	18.6
	Moisture Removal	Pints/h	1.8	3.7	6.9	8.6	8.1	9.0
	SHF		0.83	0.77	0.68	0.68	0.75	0.76
	Power factor	%	90.9	91.4	92.8	93.8	93.0	93.0
Heating	Max. Capacity	Btu/h	-	-	-	-	-	-
	Rated Capacity	Btu/h	-	-	-	-	-	-
	Min. Capacity	Btu/h	-	-	-	-	-	-
	Total Input	W	-	-	-	-	-	-
	COP	W/W	-	-	-	-	-	-
	HSPF2(IV/V)	Btu/h/W	-	-	-	-	-	-
	Power factor	%	-	-	-	-	-	-
Heating at low ambient	Rated Capacity	Btu/h	-	-	-	-	-	-
	Total Input	W	-	-	-	-	-	-
	COP	W/W	-	-	-	-	-	-
Power supply	Phase,Cycle,Voltage		1 phase, 60 Hz, 208/230 V					
	Breaker size	A	15		25		30	
Voltage	Indoor - Outdoor S1-S2		AC208 V / 230 V					
	Indoor - Outdoor S2-S3		DC24 V					
	Indoor - Remote controller		DC12 V					
Indoor unit	MCA	A	1.45	1.69	2.63	2.73	3.50	4.25
	MOCP	A	15					
	Fan Motor Output	W	85		121		300	
	Air flow (Lo-Mid-Hi)	DRY(CFM)	353 - 424 - 494	424 - 512 - 600	512 - 635 - 741	618 - 742 - 883	848-936-1024-1201	1042-1148-1254-1483
		WET(CFM)	313 - 384 - 454	384 - 472 - 560	472 - 595 - 701	578 - 702 - 843		
	External Pressure	in. WG [Pa]	0.14 - 0.20 - 0.28 - 0.40 - 0.60 [35 - 50 - 70 - 100 - 150]					
	Sound Level (Lo-Mid-Hi)	dB (A)	28 - 30 - 34	30 - 33 - 37	30 - 33 - 37	30 - 34 - 39	34 - 36 - 38 - 42	37 - 39 - 41 - 45
	External Finish		Galvanized					
	Dimensions	W: mm [inch]	900 [35-7/16]		1,100 [43-5/16]		1,400 [55-1/8]	
		D: mm [inch]	732 [28-7/8]					
		H: mm [inch]	250 [9-7/8]					
	Weight	kg [lbs]	26 [58]	28 [62]	31 [69]		37 [82]	39 [86]
	Field Drain pipe size	mm [inch]	OD. φ32 [1-1/4]					
Remote Controller			Attached in Indoor Unit					
Outdoor unit	MCA	A	17		23		29	
	MOCP	A	28		37		47	
	Fan Motor Output	W	46		74			
	Compressor	Type	SNB092FQCMC	SNB130FACMC-L1	SNB172FWHM1		MNB33FBRMC-L	
	Air flow	CFM	1,590		1,940		3,880	
	Refrigerant Control		Electronic Expansion Valve					
	Defrost Method		Reverse Cycle				-	
	Sound level at cooling	dB (A)	44		47		52	
	Sound level at heating	dB (A)	-		-		-	
	External finish		Ivory Munsell 3Y 7.8/1.1					
	Dimension	W: mm [inch]	809+62 [31-27/32 + 2-7/16]		950 [37-13/32]		1,050 [41-11/32]	
		D: mm [inch]	300 [11-13/16]		330 + 25 [12-63/64+63/64]			
		H: mm [inch]	630 [24-51/64]		943 [37-1/8]		1,346 [52-63/64]	
	Weight	kg [lbs]	41 [92]	44 [99]	68 [151]		99 [218]	
Refrigerant	Type		R410A					
	Charge	kg [lbs,oz]	2.0 [4 lbs 7 oz]	2.2 [4 lbs 14 oz]	3.5 [7 lbs 11 oz]		4.7 [10 lbs 6 oz]	
	Oil	L [oz]	0.35 (FV50S) [12]	0.50 (FV50S) [16]	0.70 (FV50S) [23]		1.40 (FV50S) [45]	
Refrigerant Pipe	Gas side O.D.	mm [inch]	12.7 [1/2F]		15.88 [5/8F]			
	Liquid side O.D.	mm [inch]	6.35 [1/4F]		9.52 [3/8F]			
Refrigerant pipe length	Height difference		Max. 30 m [Max.100 ft]					
	Length		Max. 50 m [Max.165 ft]		Max. 69 m [Max.225 ft]		Max. 50 m [Max.165 ft]	
Refrigerant piping			Not Supplied					
Connection Method			Flared					

Notes: 1. Rating conditions (cooling)-Indoor: D.B. 26.7°C (80°F), W.B. 19.4°C (67°F) Outdoor: D.B. 35°C (95°F), W.B. 23.9°C (75°F)

Operating range

		Indoor intake air temperature	Outdoor intake air temperature
Cooling	Maximum	D.B. 32°C (90°F), W.B. 23°C (73°F)	D.B. 46°C (115°F)
	Minimum	D.B. 19°C (66°F), W.B. 15°C (59°F)	D.B.-5°C (23°F) / -28.9°C (-20°F)*

* In case that the wind baffle is installed. (In case that the wind baffle is not installed, the minimum temperature will be -5°C (23°F) DB.)

Model name	Indoor unit		PVA-A12AA8	PVA-A18AA8	PVA-A24AA8	PVA-A30AA8	PVA-A36AA7	PVA-A42AA7
	Outdoor unit		PUZ-A12NKA8	PUZ-A18NKA8	PUZ-A24NHA8	PUZ-A30NHA8	PUZ-A36NKA8	PUZ-A42NKA8
Cooling	Max. Capacity	Btu/h	12,000	18,000	24,000	30,000	36,000	42,000
	Rated Capacity	Btu/h	12,000	18,000	24,000	30,000	36,000	42,000
	Min. Capacity	Btu/h	4,800	7,000	10,000	10,000	14,600	15,000
	Total Input	W	890	1,570	1,970	3,020	3,250	4,150
	EER2	Btu/h	13.4	11.4	12.1	9.9	11.0	10.1
	SEER2	Btu/h	22.0	20.3	20.5	19.4	19.8	18.7
	Moisture Removal	Pints/h	2.5	3.9	3.7	7.0	4.5	7.9
	SHF		0.77	0.76	0.83	0.74	0.77	0.81
	Power factor	%	87.9	89.8	89.7	93.2	88.3	87.6
Heating	Max. Capacity	Btu/h	19,000	23,000	28,000	34,000	42,000	48,000
	Rated Capacity	Btu/h	14,000	19,000	26,000	32,000	38,000	46,000
	Min. Capacity	Btu/h	5,600	7,800	11,900	11,900	17,800	18,200
	Total Input	W	1,070	1,470	1,920	2,640	3,030	3,900
	COP	W/W	3.83	3.78	3.96	3.55	3.70	3.50
	HSPF2(IV/V)	Btu/h/W	8.9/6.9	9.0/7.1	9.0/6.7	8.9/7.2	8.7/7.1	8.8/7.2
	Power factor	%	96.4	96.2	96.6	96.8	96.0	95.4
Heating at low ambient	Rated Capacity	Btu/h	9,900	12,000	15,000	18,000	24,000	28,400
	Total Input	W	1,400	1,520	1,760	2,110	2,990	3,440
	COP	W/W	2.00	2.30	2.40	2.50	2.30	2.40
Power supply	Phase,Cycle,Voltage		1 phase, 60 Hz, 208/230 V					
	Breaker size	A	15		25		30	
Voltage	Indoor - Outdoor S1-S2		AC208 V / 230 V					
	Indoor - Outdoor S2-S3		DC24 V					
	Indoor - Remote controller		DC12 V					
Indoor unit	MCA	A	3.00		4.13		5.50	5.63
	MOCP	A	15					
	Fan Motor Output	W	121	121	244	121	430	
	Air flow (Lo-Mid-Hi)	DRY(CFM)	280 - 340 - 400	515 - 625 - 735	613 - 744 - 875	613 - 744 - 875	788 - 956 - 1125	1040 - 1262 - 1485
		WET(CFM)	-	-	-	-	-	-
	External Pressure	in. WG [Pa]	0.30 - 0.50 - 0.80 [75 - 125 - 200]					
	Sound Level (Lo-Mid-Hi)	75Pa (0.30 in.WG)	24 - 28 - 32	28 - 33 - 36	30 - 34 - 38	30 - 34 - 38	32 - 36 - 40	36 - 40 - 44
		125Pa (0.50 in.WG)	27 - 31 - 35	30 - 34 - 38	32 - 36 - 40	32 - 36 - 40		
		200Pa (0.80 in.WG)	32 - 36 - 41	34 - 38 - 42	35 - 39 - 43	35 - 39 - 43		
	External Finish		Galvanized steel cabinet - Powder coated Slate Gray					
	Dimensions	W: mm [inch]	432 [17]		534 [21]		635 [25]	
		D: mm [inch]	548 [21-5/8]		548 [21-5/8]			
		H: mm [inch]	1,275 [50-1/4]		1,378 [54-1/4]		1,511 [59-1/2]	
	Weight	kg [lbs]	51 [113]		64 [141]		78 [172]	
	Field Drain pipe size	mm [inch]	19.05 [3/4] FPT					
Remote Controller			Attached in Indoor Unit					
Outdoor unit	MCA	A	17		23		29	
	MOCP	A	28		37		47	
	Fan Motor Output	W	46		74			
	Compressor	Type	SNB092FQCMC	SNB130FACMC-L1	SNB172FWHM1		MNB33FBRMC-L	
	Air flow	CFM	1,590		1,940		3,880	
	Refrigerant Control		Electronic Expansion Valve					
	Defrost Method		Reverse Cycle					
	Sound level at cooling	dB (A)	44		47		52	
	Sound level at heating	dB (A)	46		48		53	
	External finish		Ivory Munsell 3Y 7.8/1.1					
	Dimension	W: mm [inch]	809+62 [31-27/32 + 2-7/16]		950 [37-13/32]		1,050 [41-11/32]	
		D: mm [inch]	300 [11-13/16]		330 + 25 [12-63/64+63/64]			
		H: mm [inch]	630 [24-51/64]		943 [37-1/8]		1,346 [52-63/64]	
	Weight	kg [lbs]	42 [93]	45 [100]	69 [153]		99 [218]	
Refrigerant	Type		R410A					
	Charge	kg [lbs,oz]	2.0 [4 lbs 7 oz]	2.2 [4 lbs 14 oz]	3.5 [7 lbs 11 oz]		4.7 [10 lbs 6 oz]	
	Oil	L [oz]	0.35 (FV50S) [12]	0.50 (FV50S) [16]	0.70 (FV50S) [23]		1.40 (FV50S) [45]	
Refrigerant Pipe	Gas side O.D.	mm [inch]	12.7 [1/2F]		15.88 [5/8F]			
	Liquid side O.D.	mm [inch]	6.35 [1/4F]		9.52 [3/8F]			
Refrigerant pipe length	Height difference		Max. 30 m [Max.100 ft]					
	Length		Max. 30 m [Max.100 ft]		Max. 50 m [Max.165 ft]			
Refrigerant piping			Not Supplied					
Connection Method			Flared					

Notes: 1. Rating conditions (cooling)-Indoor: D.B. 26.7°C (80°F), W.B. 19.4°C (67°F) Outdoor: D.B. 35°C (95°F), W.B. 23.9°C (75°F)
(heating)-Indoor: D.B. 21.1°C (70°F), W.B. 15.6°C (60°F) Outdoor: D.B. 8.3°C (47°F), W.B. 6.1°C (43°F)
2. Rating conditions (heating)-Indoor: D.B. 21.1°C (70°F), W.B. 15.6°C (60°F) Outdoor: D.B. -8.3°C (17°F), W.B. -9.4°C (15°F)

Operating range

		Indoor intake air temperature	Outdoor intake air temperature
Cooling	Maximum	D.B. 32°C (90°F), W.B. 23°C (73°F)	D.B. 46°C (115°F)
	Minimum	D.B. 19°C (66°F), W.B. 15°C (59°F)	D.B. -5°C (23°F) / -18°C (0°F)*
Heating	Maximum	D.B. 28°C (83°F)	D.B. 21.1°C (70°F), W.B. 15°C (59°F)
	Minimum	D.B. 10°C (50°F)	D.B. -25°C (-13°F), W.B. -25°C (-13°F)

* In case that the wind baffle is installed. (In case that the wind baffle is not installed, the minimum temperature will be -5°C (23°F) DB.)

Model name	Indoor unit		PVA-A12AA8	PVA-A18AA8	PVA-A24AA8	PVA-A30AA8	PVA-A36AA7	PVA-A42AA7
	Outdoor unit		PUY-A12NKA8	PUY-A18NKA8	PUY-A24NHA8	PUY-A30NHA8	PUY-A36NKA8	PUY-A42NKA8
Cooling	Max. Capacity	Btu/h	12,000	18,000	24,000	30,000	36,000	42,000
	Rated Capacity	Btu/h	12,000	18,000	24,000	30,000	36,000	42,000
	Min. Capacity	Btu/h	4,800	7,000	10,000	10,000	14,600	15,000
	Total Input	W	890	1,570	1,970	3,020	3,250	4,150
	EER2	Btu/h	13.4	11.4	12.1	9.9	11.0	10.1
	SEER2	Btu/h	22.0	20.3	20.5	19.4	19.8	18.7
	Moisture Removal	Pints/h	2.5	3.9	3.7	7.0	4.5	7.9
	SHF		0.77	0.76	0.83	0.74	0.77	0.81
	Power factor	%	87.9	89.8	89.7	93.2	88.3	87.6
Heating	Max. Capacity	Btu/h	-	-	-	-	-	-
	Rated Capacity	Btu/h	-	-	-	-	-	-
	Min. Capacity	Btu/h	-	-	-	-	-	-
	Total Input	W	-	-	-	-	-	-
	COP	W/W	-	-	-	-	-	-
	HSPF2(IV/V)	Btu/h/W	-	-	-	-	-	-
	Power factor	%	-	-	-	-	-	-
Heating at low ambient	Rated Capacity	Btu/h	-	-	-	-	-	-
	Total Input	W	-	-	-	-	-	-
	COP	W/W	-	-	-	-	-	-
Power supply	Phase,Cycle,Voltage		1 phase, 60 Hz, 208/230 V					
	Breaker size	A	15		25		30	
Voltage	Indoor - Outdoor S1-S2		AC208 V / 230 V					
	Indoor - Outdoor S2-S3		DC24 V					
	Indoor - Remote controller		DC12 V					
Indoor unit	MCA	A	3.00		4.13		5.50	5.63
	MOCP	A	15					
	Fan Motor Output	W	121	121	244	121	430	
	Air flow (Lo-Mid-Hi)	DRY(CFM)	280 - 340 - 400	515 - 625 - 735	613 - 744 - 875	613 - 744 - 875	788 - 956 - 1,125	1,040 - 1,262 - 1,485
		WET(CFM)	-	-	-	-	-	-
	External Pressure	in. WG [Pa]	0.30 - 0.50 - 0.80 [75 - 125 - 200]					
	Sound Level (Lo-Mid-Hi)	75Pa (0.30 in.WG)	24 - 28 - 32	28 - 33 - 36	30 - 34 - 38	30 - 34 - 38	32 - 36 - 40	36 - 40 - 44
		125Pa (0.50 in.WG)	27 - 31 - 35	30 - 34 - 38	32 - 36 - 40	32 - 36 - 40		
		200Pa (0.80 in.WG)	32 - 36 - 41	34 - 38 - 42	35 - 39 - 43	35 - 39 - 43		
	External Finish		Galvanized steel cabinet - Powder coated Slate Gray					
	Dimensions	W: mm [inch]	432 [17]		534 [21]		635 [25]	
		D: mm [inch]	548 [21-5/8]		548 [21-5/8]			
		H: mm [inch]	1,275 [50-1/4]		1,378 [54-1/4]		1,511 [59-1/2]	
	Weight	kg [lbs]	51 [113]		64 [141]		78 [172]	
	Field Drain pipe size	mm [inch]	19.05 [3/4] FPT					
Remote Controller			Attached in Indoor Unit					
Outdoor unit	MCA	A	11		19		29	
	MOCP	A	28		26		47	
	Fan Motor Output	W	46		86			
	Compressor	Type	SNB092FNCM	SNB130FNCM2	SNB172FWHM1		MNB33FBRMC-L	
	Air flow	CFM	1,590		1,940		3,880	
	Refrigerant Control		Electronic Expansion Valve					
	Defrost Method		-					
	Sound level at cooling	dB (A)	44		47		52	
	Sound level at heating	dB (A)	-		-		-	
	External finish		Ivory Munsell 3Y 7.8/1.1					
	Dimension	W: mm [inch]	809+62 [31-27/32 + 2-7/16]		950 [37-13/32]		1,050 [41-11/32]	
		D: mm [inch]	300 [11-13/16]		330 + 25 [12-63/64+63/64]			
		H: mm [inch]	630 [24-51/64]		943 [37-1/8]		1,346 [52-63/64]	
	Weight	kg [lbs]	41 [92]	44 [99]	68 [151]		99 [218]	
Refrigerant	Type		R410A					
	Charge	kg [lbs,oz]	2.0 [4 lbs 7 oz]	2.2 [4 lbs 14 oz]	3.5 [7 lbs 11 oz]		4.7 [10 lbs 6 oz]	
	Oil	L [oz]	0.35 (FV50S) [12]	0.50 (FV50S) [16]	0.70 (FV50S) [23]		1.40 (FV50S) [45]	
Refrigerant Pipe	Gas side O.D.	mm [inch]	12.7 [1/2F]		15.88 [5/8F]			
	Liquid side O.D.	mm [inch]	6.35 [1/4F]		9.52 [3/8F]			
Refrigerant pipe length	Height difference		Max. 30 m [Max.100 ft]					
	Length		Max. 50 m [Max.165 ft]		Max. 69 m [Max.225 ft]		Max. 50 m [Max.165 ft]	
Refrigerant piping			Not Supplied					
Connection Method			Flared					

Notes: 1. Rating conditions (cooling)-Indoor: D.B. 26.7°C (80°F), W.B. 19.4°C (67°F) Outdoor: D.B. 35°C (95°F), W.B. 23.9°C (75°F)

Operating range

		Indoor intake air temperature	Outdoor intake air temperature
Cooling	Maximum	D.B. 32°C (90°F), W.B. 23°C (73°F)	D.B. 46°C (115°F)
	Minimum	D.B. 19°C (66°F), W.B. 15°C (59°F)	D.B. -5°C (23°F) / -18°C (0°F)*

* In case that the wind baffle is installed. (In case that the wind baffle is not installed, the minimum temperature will be -5°C (23°F) DB.)

2 POSITION OF THE CENTER OF GRAVITY

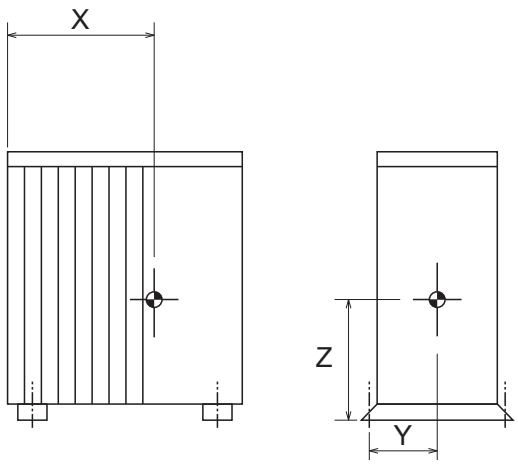

Unit: inch (mm)

Model name	X	Y	Z
PUZ-A12/18NKA8 PUY-A12/18NKA8	20-3/8 (518)	5-1/2 (140)	12-3/4 (300)
PUZ-A24/30NHA8 PUY-A24/30NHA8	21-5/8 (549)	7 (180)	17-5/8 (450)
PUZ-A36/42NKA8 PUY-A36/42NKA8	24-3/8 (619)	5-7/8 (150)	22-3/4 (580)

3 PERFORMANCE CURVES

FOR THE COMBINATION OF OUTDOOR UNIT
PUZ-A12/18/36/42NKA8 PUZ-A24/30NHA8

Cooling performance curve

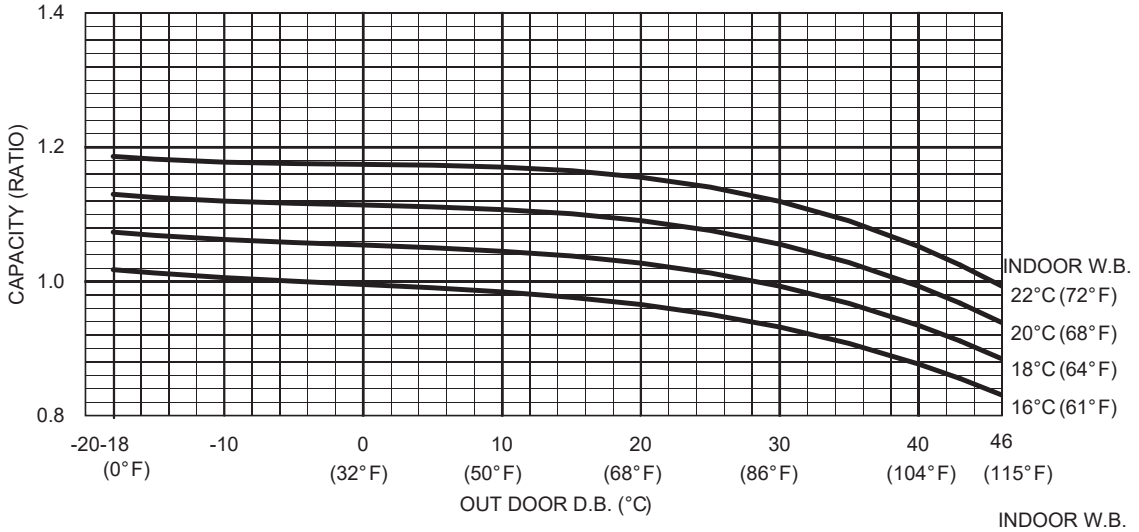

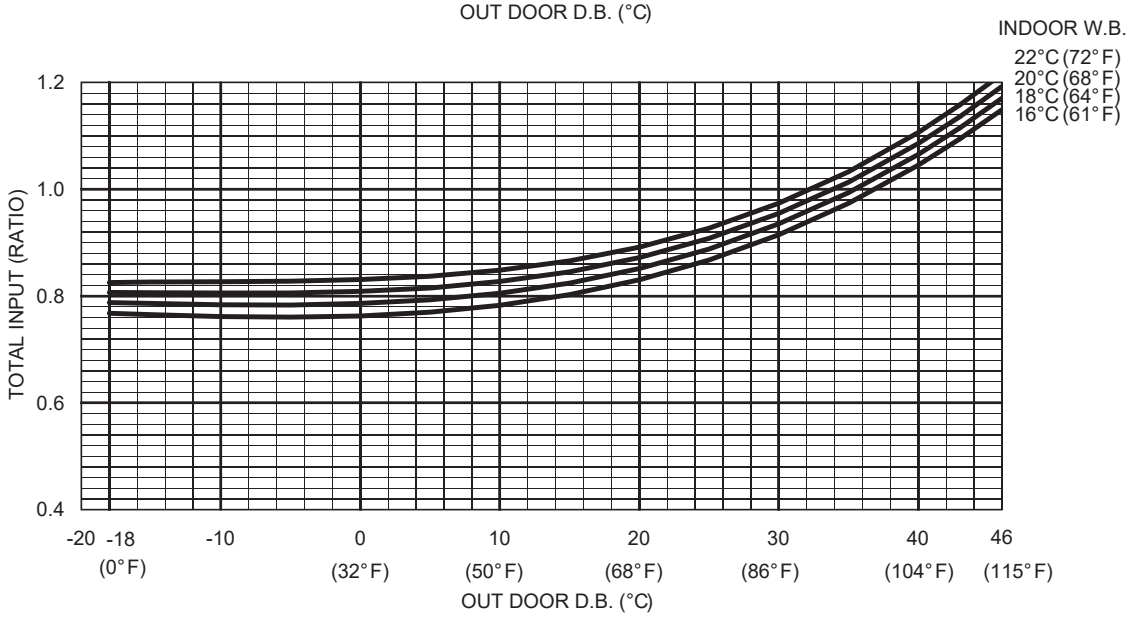

Note:This diagram shows the case where the operation frequency of a compressor is fixed.

CAPACITY (RATIO)

Outdoor D.B.[°C]	-18	-15	-10	-5	0	5	10	15	20	25	30	35	40	43	46
Outdoor D.B.[°F]	0	-	-	23	32	-	50	-	68	-	86	-	104	-	115
Indoor W.B. 22°C(72°F)	1.186	1.182	1.178	1.175	1.174	1.173	1.170	1.165	1.155	1.141	1.119	1.090	1.052	1.024	0.993
Indoor W.B. 20°C(68°F)	1.130	1.125	1.120	1.116	1.114	1.111	1.107	1.101	1.091	1.076	1.056	1.028	0.993	0.968	0.939
Indoor W.B. 18°C(64°F)	1.073	1.068	1.062	1.058	1.054	1.050	1.045	1.038	1.027	1.013	0.993	0.967	0.934	0.911	0.885
Indoor W.B. 16°C(61°F)	1.018	1.012	1.006	1.000	0.995	0.990	0.984	0.976	0.965	0.951	0.932	0.908	0.877	0.855	0.831

TOTAL INPUT (RATIO)

Outdoor D.B.[°C]	-18	-15	-10	-5	0	5	10	15	20	25	30	35	40	43	46
Outdoor D.B.[°F]	0	-	-	23	-	-	50	-	68	-	86	-	104	-	115
Indoor W.B. 22°C(72°F)	0.825	0.826	0.827	0.828	0.831	0.837	0.848	0.866	0.892	0.927	0.973	1.033	1.106	1.158	1.216
Indoor W.B. 20°C(68°F)	0.807	0.806	0.805	0.806	0.809	0.815	0.827	0.845	0.872	0.908	0.954	1.013	1.086	1.136	1.192
Indoor W.B. 18°C(64°F)	0.788	0.786	0.784	0.783	0.786	0.793	0.805	0.824	0.852	0.888	0.935	0.994	1.065	1.115	1.170
Indoor W.B. 16°C(61°F)	0.768	0.765	0.761	0.760	0.763	0.770	0.783	0.802	0.830	0.867	0.915	0.974	1.045	1.094	1.149

FOR THE COMBINATION OF OUTDOOR UNIT
PUY-A12/18/36/42NKA8 PUZ-A24/30NHA8

Cooling performance curve

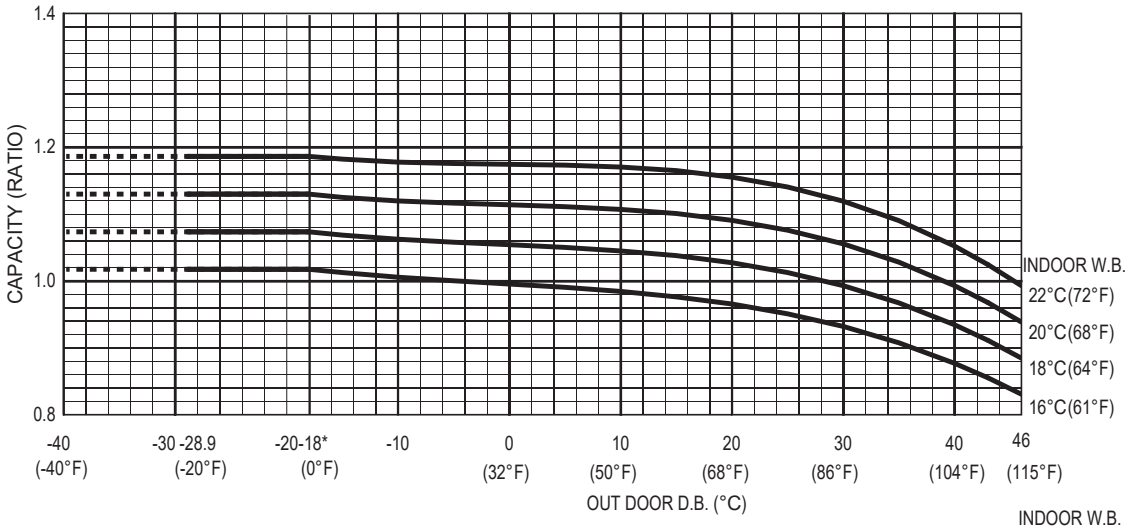

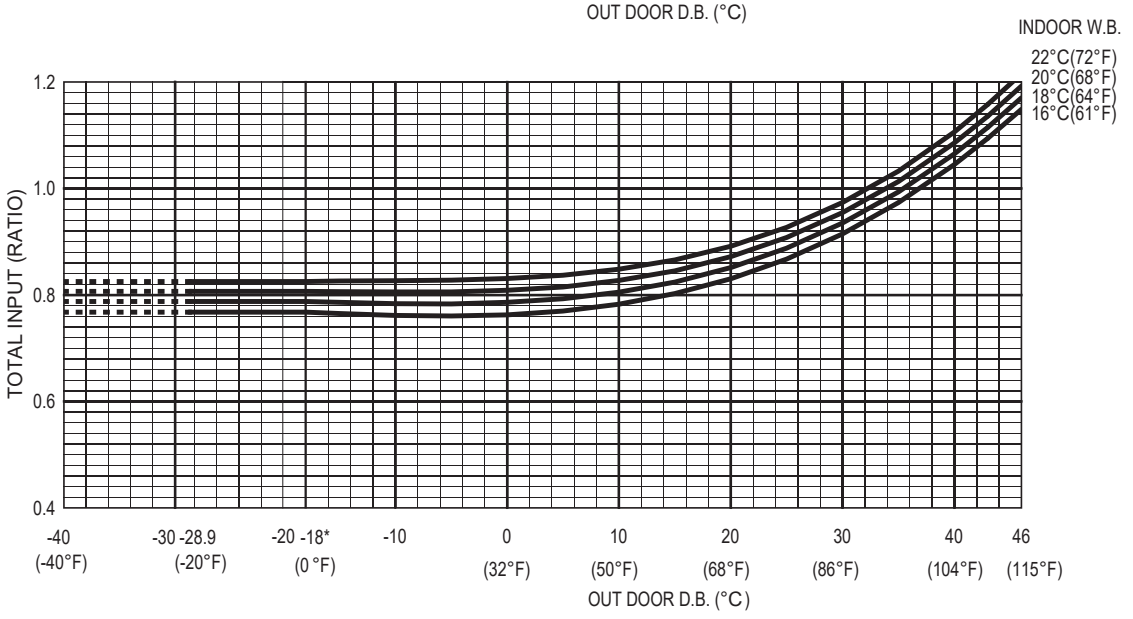

Note:This diagram shows the case where the operation frequency of a compressor is fixed.

CAPACITY (RATIO)

Outdoor D.B.[°C]	-28.9	-18	-15	-10	-5	0	5	10	15	20	25	30	35	40	43	46
Outdoor D.B.[°F]	-20	0	-	-	23	32	-	50	-	68	-	86	-	104	-	115
Indoor W.B. 22°C (72°F)	1.186	1.186	1.182	1.178	1.175	1.174	1.173	1.170	1.165	1.155	1.141	1.119	1.090	1.052	1.024	0.993
Indoor W.B. 20°C (68°F)	1.130	1.130	1.125	1.120	1.116	1.114	1.111	1.107	1.101	1.091	1.076	1.056	1.028	0.993	0.968	0.939
Indoor W.B. 18°C (64°F)	1.073	1.073	1.068	1.062	1.058	1.054	1.050	1.045	1.038	1.027	1.013	0.993	0.967	0.934	0.911	0.885
Indoor W.B. 16°C (61°F)	1.018	1.018	1.012	1.006	1.000	0.995	0.990	0.984	0.976	0.965	0.951	0.932	0.908	0.877	0.855	0.831

TOTAL INPUT (RATIO)

Outdoor D.B.[°C]	-28.9	-18	-15	-10	-5	0	5	10	15	20	25	30	35	40	43	46
Outdoor D.B.[°F]	-20	0	-	-	23	-	-	50	-	68	-	86	-	104	-	115
Indoor W.B. 22°C (72°F)	0.825	0.825	0.826	0.827	0.828	0.831	0.837	0.848	0.866	0.892	0.927	0.973	1.033	1.106	1.158	1.216
Indoor W.B. 20°C (68°F)	0.807	0.807	0.806	0.805	0.806	0.809	0.815	0.827	0.845	0.872	0.908	0.954	1.013	1.086	1.136	1.192
Indoor W.B. 18°C (64°F)	0.788	0.788	0.786	0.784	0.783	0.786	0.793	0.805	0.824	0.852	0.888	0.935	0.994	1.065	1.115	1.170
Indoor W.B. 16°C (61°F)	0.768	0.768	0.765	0.761	0.760	0.763	0.770	0.783	0.802	0.830	0.867	0.915	0.974	1.045	1.094	1.149

Heating performance curve

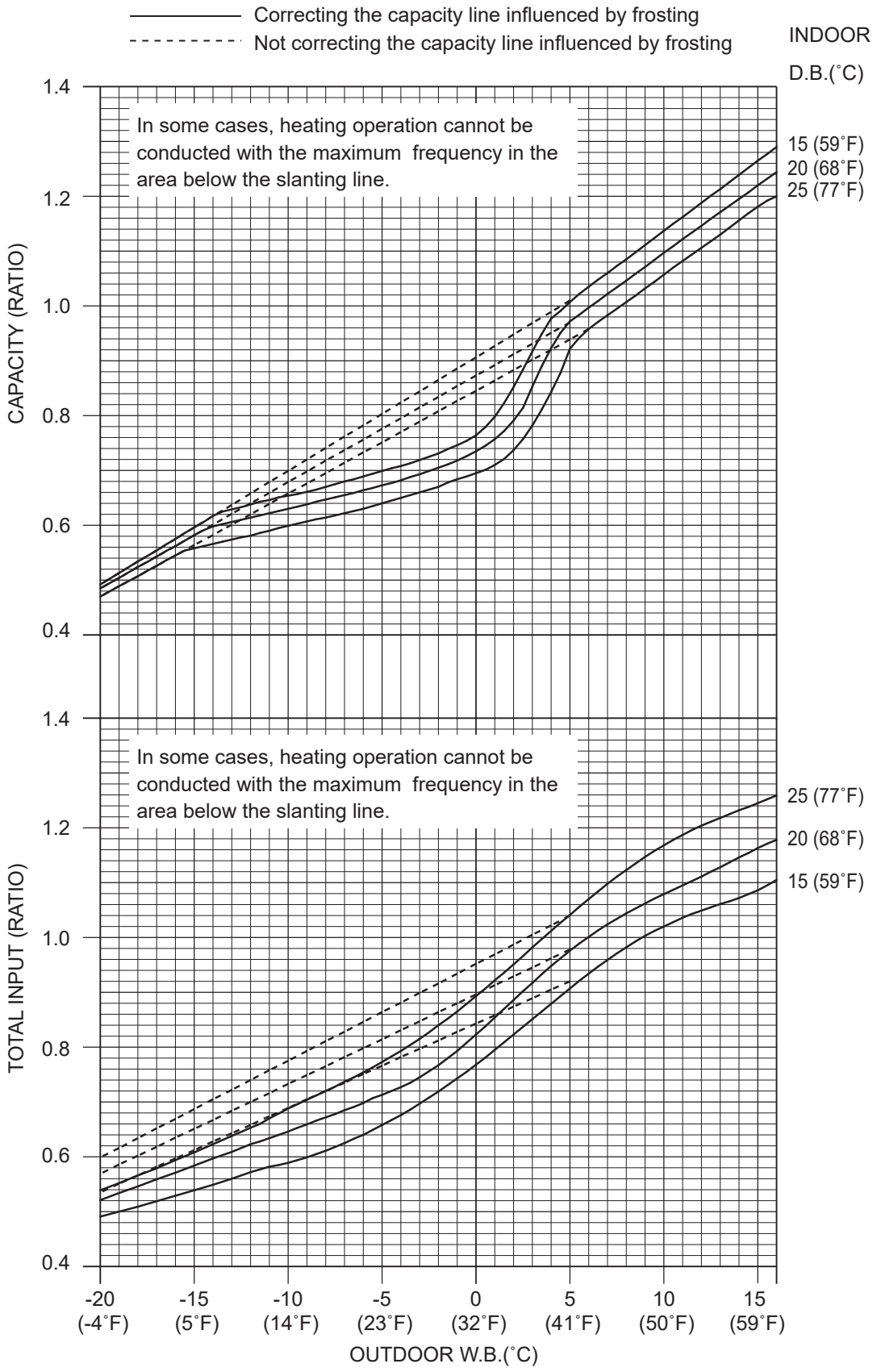

Note : This diagram shows the case where the operation frequency of a compressor is fixed.

4 CORRECTION FACTORS

4-1. COOLING CAPACITY CORRECTION FACTORS

Outdoor unit	Refrigerant piping length (one way)							
	5m (16ft)	10m (33ft)	20m (70ft)	30m (100ft)	40m (130ft)	50m (165ft)	60m (195ft)	69m (225ft)
PUZ-A12/18	1.000	0.985	0.948	0.916	-	-	-	-
PUZ-A24/30	1.000	0.988	0.964	0.938	0.915	0.893	-	-
PUZ-A36/42	1.000	0.985	0.948	0.916	0.886	0.859	-	-
PUY-A12/18	1.000	0.985	0.948	0.916	0.886	0.859	-	-
PUY-A24/30	1.000	0.985	0.964	0.938	0.915	0.893	0.872	0.855
PUY-A36/42	1.000	0.985	0.948	0.916	0.886	0.859	0.838	0.818

4-2. HEATING CAPACITY CORRECTION FACTORS

Outdoor unit	Refrigerant piping length (one way)					
	5m (16ft)	10m (33ft)	20m (70ft)	30m (100ft)	40m (130ft)	50m (165ft)
PUZ-A12/18	1.00	0.997	0.991	0.985	-	-
PUZ-A24/30	1.00	0.997	0.991	0.985	0.969	0.942
PUZ-A36/42	1.00	0.997	0.991	0.985	0.979	0.973

Refer to the following graphs as to the connection with each indoor unit.

4-3. CAPACITY CORRECTION

Cooling and heating capacity is lowered according to pipe length. Capacity can be obtained by referring to the capacity curves below.
Corrected pipe length (m) = actual pipe length (m) + number of bends x 0.3 (m)
Corrected pipe length (ft) = actual pipe length (ft) + number of bends x 1 (ft)

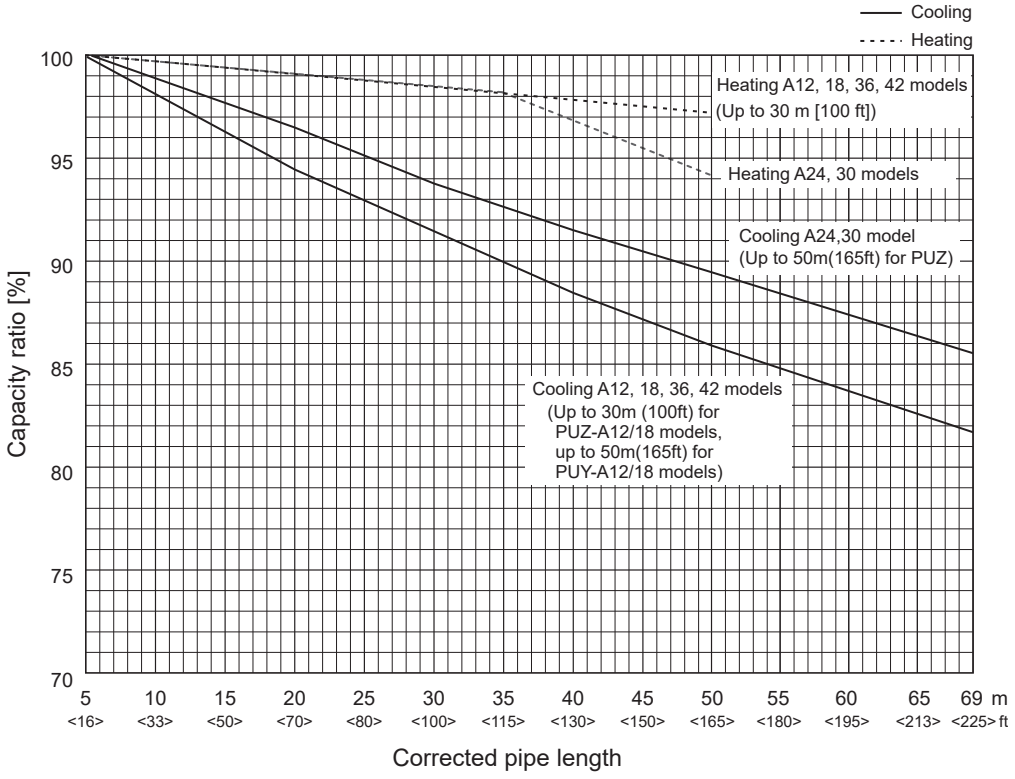

When pipe is one size larger than standard size, capacity can be obtained by referring to capacity curves of standard size.

4-4. ADDITION OF REFRIGERANT

- Additional charging is not necessary if the pipe length does not exceed 21 m, 70 ft.
- Especially, additional charging is not necessary if the pipe length does not exceed 30 m 100 ft for A24, 30 connected to the A-COIL indoor unit (PAA-A18, 24, 30).
- If the pipe length exceeds the specified length above, charge the unit with additional R410A refrigerant according to the permitted pipe lengths in the chart below.

Notes:

1. When the unit is stopped, charge the unit with the additional refrigerant through the liquid stop valve after the pipe extensions and indoor unit have been vacuumized.
   When the unit is operating, add refrigerant to the gas check valve using a safety charger. Do not add liquid refrigerant directly to the check valve.
2. After charging the unit with refrigerant, note the added refrigerant amount on the service label (attached to the unit).

- Be careful when installing multiple units. Connecting to an incorrect indoor unit can lead to abnormally high pressure and have a serious effect on operation performance

Model	Max pipe length	Max height difference	Additional refrigerant charging amount (kg/oz) *2																	
			21 m 70 ft	24 m 80 ft	27 m 90 ft	30 m 100 ft	34 m 110 ft	37 m 120 ft	40 m 130 ft	43 m 140 ft	46 m 150 ft	49 m 160 ft	50 m 165 ft	52 m 170 ft	55 m 180 ft	58 m 190 ft	61 m 200 ft	64 m 210 ft	67 m 220 ft	69 m 225 ft
PUZ-A12NKA8 PUZ-A18NKA8	30 m, 100 ft	30 m, 100 ft	0	0.06 kg 2 oz	0.11 kg 4 oz	0.17 kg 6 oz	-	-	-	-	-	-	-	-	-	-	-	-	-	-
PUZ-A24NHA8 PUZ-A30NHA8	50 m, 165 ft *1	30 m, 100 ft	0	0.20 kg 7 oz	0.40 kg 14 oz	0.60 kg 21 oz	0.79 kg 28 oz	0.85 kg 30 oz	0.85 kg 30 oz	0.85 kg 30 oz	0.85 kg 30 oz	0.85 kg 30 oz	0.85 kg 30 oz	-	-	-	-	-	-	-
PUZ-A36NKA8 PUZ-A42NKA8	50 m, 165 ft *1	30 m, 100 ft	0	0	0	0	0.20 kg 7 oz	0.40 kg 14 oz	0.60 kg 21 oz	0.79 kg 28 oz	0.99 kg 35 oz	1.19 kg 42 oz	1.29 kg 45.5 oz	-	-	-	-	-	-	-
PUY-A12NKA8 PUY-A18NKA8	50 m, 165 ft	30 m, 100 ft	0	0.03 kg 1 oz	0.06 kg 2 oz	0.09 kg 3 oz	0.11 kg 4 oz	0.14 kg 5 oz	0.17 kg 6 oz	0.20 kg 7 oz	0.23 kg 8 oz	0.26 kg 9 oz	0.27 kg 10 oz	-	-	-	-	-	-	-
PUY-A24NHA8 PUY-A30NHA8	69 m, 225 ft *1	30 m, 100 ft	0	0.09 kg 3 oz	0.17 kg 6 oz	0.26 kg 9 oz	0.34 kg 12 oz	0.43 kg 15 oz	0.51 kg 18 oz	0.60 kg 21 oz	0.68 kg 24 oz	0.77 kg 27 oz	0.81 kg 29 oz	0.85 kg 30 oz	0.94 kg 33 oz	1.02 kg 36 oz	1.11 kg 39 oz	1.19 kg 42 oz	1.28 kg 45 oz	1.32 kg 47 oz
PUY-A36NKA8 PUY-A42NKA8	69 m, 225 ft *1	30 m, 100 ft	0	0	0	0	0.09 kg 3 oz	0.17 kg 6 oz	0.26 kg 9 oz	0.34 kg 12 oz	0.43 kg 15 oz	0.51 kg 18 oz	0.55 kg 20 oz	0.60 kg 21 oz	0.68 kg 24 oz	0.77 kg 27 oz	0.85 kg 30 oz	0.94 kg 33 oz	1.02 kg 36 oz	1.06 kg 37.5 oz

*1. If outdoor unit is connected to the A-COIL indoor unit (PAA-A18, 24, 30), pipe length is “Max. 30 m, 100 ft”.
*2. This additional refrigerant chart is used only when connected to an indoor unit other than A-COIL indoor unit (PAA-A18, 24, 30). Additional charging is not necessary if the pipe length does not exceed 30 m 100 ft for A24, 30 connected to the A-COIL indoor unit (PAA-A18, 24, 30).

5 PART LOAD CAPACITY CHART

PLA-A12EA8
PUZ-A12NKA8
1) COOLING

Rated
Q(Btu/h): 12000
W: 730

Indoor W.B.			72°F / 22.2°C						67°F / 19.4°C						64°F / 17.8°C						61°F / 16.1°C					
Outdoor D.B.			Max	Rated	75%	50%	25%	Min	Max	Rated	75%	50%	25%	Min	Max	Rated	75%	50%	25%	Min	Max	Rated	75%	50%	25%	Min
(°F)	(°C)																									
115	46.1	Q(Btu/h)	11592	11592	8694	5796	-	5699	10956	10956	8217	5478	-	5387	10332	10332	7749	5166	-	5080	9696	9696	7272	4848	-	4767
		W	879	879	659	439	-	325	861	861	646	431	-	319	845	845	634	423	-	313	831	831	623	415	-	307
110	43.3	Q(Btu/h)	11904	11904	8928	5952	-	5853	11232	11232	8424	5616	-	5522	10548	10548	7911	5274	-	5186	9948	9948	7461	4974	-	4891
		W	840	840	630	420	-	311	824	824	618	412	-	305	810	810	607	405	-	299	795	795	596	397	-	294
106	41.1	Q(Btu/h)	12168	12168	9126	6084	-	5983	11484	11484	8613	5742	-	5646	10788	10788	8091	5394	-	5304	10152	10152	7614	5076	-	4991
		W	817	817	613	408	-	302	795	795	596	397	-	294	780	780	585	390	-	289	767	767	575	383	-	284
102	38.9	Q(Btu/h)	12372	12372	9279	6186	-	6083	11700	11700	8775	5850	-	5753	10968	10968	8226	5484	-	5393	10296	10296	7722	5148	-	5062
		W	791	791	593	396	-	293	777	777	583	388	-	287	759	759	569	380	-	281	745	745	558	372	-	275
98	36.7	Q(Btu/h)	12552	12552	9414	6276	-	6171	11844	11844	8883	5922	-	5823	11148	11148	8361	5574	-	5481	10452	10452	7839	5226	-	5139
		W	767	767	575	383	-	284	752	752	564	376	-	278	737	737	553	369	-	273	723	723	542	361	-	267
94	34.4	Q(Btu/h)	12720	12720	9540	6360	-	6254	12000	12000	9000	6000	-	5900	11292	11292	8469	5646	-	5552	10596	10596	7947	5298	-	5210
		W	745	745	558	372	-	275	730	730	548	365	-	270	717	717	538	358	-	265	699	699	525	350	-	259
90	32.2	Q(Btu/h)	12900	12900	9675	6450	-	6343	12144	12144	9108	6072	-	5971	11436	11436	8577	5718	-	5623	10740	10740	8055	5370	-	5281
		W	723	723	542	361	-	267	708	708	531	354	-	262	694	694	520	347	-	257	680	680	510	340	-	251
86	30.0	Q(Btu/h)	13068	13068	9801	6534	-	6425	12324	12324	9243	6162	-	6059	11592	11592	8694	5796	-	5699	10884	10884	8163	5442	-	5351
		W	703	703	527	351	-	260	690	690	517	345	-	255	676	676	507	338	-	250	661	661	496	331	-	245
82	27.8	Q(Btu/h)	13188	13188	9891	6594	-	6484	12432	12432	9324	6216	-	6112	11676	11676	8757	5838	-	5741	10968	10968	8226	5484	-	5393
		W	691	691	518	345	-	255	676	676	507	338	-	250	658	658	493	329	-	243	647	647	485	323	-	239
78	25.6	Q(Btu/h)	13308	13308	9981	6654	-	6543	12552	12552	9414	6276	-	6171	11808	11808	8856	5904	-	5806	11064	11064	8298	5532	-	5440
		W	674	674	505	337	-	249	661	661	495	330	-	244	646	646	485	323	-	239	630	630	472	315	-	233
74	23.3	Q(Btu/h)	13368	13368	10026	6684	-	6573	12612	12612	9459	6306	-	6201	11904	11904	8928	5952	-	5853	11148	11148	8361	5574	-	5481
		W	661	661	496	331	-	245	647	647	485	323	-	239	632	632	474	316	-	234	618	618	464	309	-	229
70	21.1	Q(Btu/h)	13428	13428	10071	6714	-	6602	12660	12660	9495	6330	-	6225	11964	11964	8973	5982	-	5882	11208	11208	8406	5604	-	5511
		W	650	650	488	325	-	241	636	636	477	318	-	235	621	621	466	311	-	230	607	607	456	304	-	225
66	18.9	Q(Btu/h)	13512	13512	10134	6756	-	6643	12780	12780	9585	6390	-	6284	12024	12024	9018	6012	-	5912	11328	11328	8496	5664	-	5570
		W	639	639	480	320	-	237	625	625	469	312	-	231	611	611	458	306	-	226	596	596	447	298	-	221
62	16.7	Q(Btu/h)	13536	13536	10152	6768	-	6655	12816	12816	9612	6408	-	6301	12084	12084	9063	6042	-	5941	11376	11376	8532	5688	-	5593
		W	632	632	474	316	-	234	621	621	466	311	-	230	604	604	453	302	-	223	589	589	442	295	-	218
58	14.4	Q(Btu/h)	13584	13584	10188	6792	-	6679	12840	12840	9630	6420	-	6313	12072	12072	9054	6036	-	5935	11364	11364	8523	5682	-	5587
		W	624	624	468	312	-	231	609	609	457	304	-	225	594	594	446	297	-	220	578	578	434	289	-	214
54	12.2	Q(Btu/h)	13632	13632	10224	6816	-	6702	12900	12900	9675	6450	-	6343	12144	12144	9108	6072	-	5971	11436	11436	8577	5718	-	5623
		W	621	621	466	311	-	230	607	607	456	304	-	225	591	591	443	296	-	219	575	575	431	287	-	212
50	10.0	Q(Btu/h)	13656	13656	10242	6828	-	6714	12924	12924	9693	6462	-	6354	12204	12204	9153	6102	-	6000	11484	11484	8613	5742	-	5646
		W	613	613	460	307	-	227	598	598	448	299	-	221	582	582	436	291	-	215	566	566	424	283	-	209
46	7.8	Q(Btu/h)	13680	13680	10260	6840	-	6726	12960	12960	9720	6480	-	6372	12228	12228	9171	6114	-	6012	11532	11532	8649	5766	-	5670
		W	609	609	457	304	-	225	594	594	446	297	-	220	578	578	434	289	-	214	562	562	422	281	-	208
42	5.6	Q(Btu/h)	13692	13692	10269	6846	-	6732	12960	12960	9720	6480	-	6372	12252	12252	9189	6126	-	6024	11544	11544	8658	5772	-	5676
		W	607	607	456	304	-	225	592	592	444	296	-	219	575	575	431	287	-	212	558	558	418	279	-	206
38	3.3	Q(Btu/h)	13692	13692	10269	6846	-	6732	12984	12984	9738	6492	-	6384	12276	12276	9207	6138	-	6036	11580	11580	8685	5790	-	5694
		W	604	604	453	302	-	223	588	588	441	294	-	217	571	571	428	285	-	211	553	553	415	277	-	205
34	1.1	Q(Btu/h)	13704	13704	10278	6852	-	6738	12996	12996	9747	6498	-	6390	12300	12300	9225	6150	-	6048	11604	11604	8703	5802	-	5705
		W	602	602	451	301	-	222	586	586	440	293	-	217	569	569	427	285	-	211	553	553	414	276	-	204
30	-1.1	Q(Btu/h)	13704	13704	10278	6852	-	6738	12996	12996	9747	6498	-	6390	12312	12312	9234	6156	-	6053	11616	11616	8712	5808	-	5711
		W	602	602	451	301	-	222	584	584	438	292	-	216	568	568	426	284	-	210	550	550	413	275	-	204
26	-3.3	Q(Btu/h)	13716	13716	10287	6858	-	6744	13020	13020	9765	6510	-	6402	12336	12336	9252	6168	-	6065	11652	11652	8739	5826	-	5729
		W	600	600	450	300	-	222	583	583	437	291	-	215	566	566	425	283	-	210	549	549	412	274	-	203
23	-5.0	Q(Btu/h)	13716	13716	10287	6858	-	6744	13032	13032	9774	6516	-	6407	12348	12348	9261	6174	-	6071	11676	11676	8757	5838	-	5741
		W	599	599	449	299	-	221	583	583	437	291	-	215	566	566	424	283	-	209	549	549	412	274	-	203
18	-7.8	Q(Btu/h)	13752	13752	10314	6876	-	6761	13068	13068	9801	6534	-	6425	12348	12348	9261	6174	-	6071	11736	11736	8802	5868	-	5770
		W	596	596	447	298	-	221	582	582	436	291	-	215	565	565	424	283	-	209	549	549	412	274	-	203
14	-10.0	Q(Btu/h)	13752	13752	10314	6876	-	6761	13068	13068	9801	6534	-	6425	12396	12396	9297	6198	-	6095	11748	11748	8811	5874	-	5776
		W	598	598	448	299	-	221	582	582	436	291	-	215	566	566	425	283	-	210	550	550	412	275	-	203
10	-12.2	Q(Btu/h)	13776	13776	10332	6888	-	6773	13068	13068	9801	6534	-	6425	12432	12432	9324	6216	-	6112	11784	11784	8838	5892	-	5794
		W	597	597	448	299	-	221	582	582	436	291	-	215	567	567	425	284	-	210	550	550	413	275	-	204
6	-14.4	Q(Btu/h)	13788	13788	10341	6894	-	6779	13116	13116	9837	6558	-	6449	12456	12456	9342	6228	-	6124	11796	11796	8847	5898	-	5800
		W	597	597	448	299	-	221	583	583	437	291	-	215	568	568	426	284	-	210	553	553	414	276	-	204
2	-16.7	Q(Btu/h)	13824	13824	10368	6912	-	6797	13164	13164	9873	6582	-	6472	12492	12492	9369	6246	-	6142	11880	11880	8910	5940	-	5841
		W	596	596	447	298	-	221	583	583	437	291	-	215	568	568	426	284	-	210	553	553	415	277	-	205
0	-17.8	Q(Btu/h)	13848	13848	10386	6924	-	6809	13188	13188	9891	6594	-	6484	12528	12528	9396	6264	-	6160	11880	11880	8910	5940	-	5841
		W	596	596	447	298	-	221	583	583	437	292	-	216	569	569	427	285	-	211	555	555	416	277	-	205

PLA-A12EA8
PUZ-A12NKA8
2) HEATING

Rated
Q(Btu/h): 14000
W: 830

Indoor D.B.			80°F / 26.7°C						70°F / 21.1°C						60°F / 15.6°C					
Outdoor W.B.			Max	Rated	75%	50%	25%	Min	Max	Rated	75%	50%	25%	Min	Max	Rated	75%	50%	25%	Min
(°F)	(°C)																			
70	21.1	Q(Btu/h)	26940	18858	14144	9429	-	7409	27760	19432	14574	9716	-	7634	28800	20160	15120	10080	-	7920
		W	2054	1136	852	568	-	342	1913	1058	794	529	-	319	1782	986	740	493	-	297
65	18.3	Q(Btu/h)	25540	17878	13409	8939	-	7024	26360	18452	13839	9226	-	7249	27340	19138	14354	9569	-	7519
		W	1985	1098	824	549	-	331	1842	1019	764	510	-	307	1721	952	714	476	-	287
60	15.6	Q(Btu/h)	24200	16940	12705	8470	-	6655	25020	17514	13136	8757	-	6881	25940	18158	13619	9079	-	7134
		W	1896	1049	787	525	-	316	1775	982	736	491	-	296	1661	919	689	459	-	277
55	12.8	Q(Btu/h)	22800	15960	11970	7980	-	6270	23620	16534	12401	8267	-	6496	24480	17136	12852	8568	-	6732
		W	1841	1018	764	509	-	307	1703	942	707	471	-	284	1602	886	665	443	-	267
50	10.0	Q(Btu/h)	21420	14994	11246	7497	-	5891	22220	15554	11666	7777	-	6111	23040	16128	12096	8064	-	6336
		W	1769	979	734	489	-	295	1634	904	678	452	-	272	1545	855	641	427	-	258
47	8.3	Q(Btu/h)	20540	14378	10784	7189	-	5649	21340	14938	11204	7469	-	5869	22140	15498	11624	7749	-	6089
		W	1712	947	710	474	-	285	1589	879	659	439	-	265	1496	828	621	414	-	249
42	5.6	Q(Btu/h)	19160	13412	10059	6706	-	5269	20000	14000	10500	7000	-	5500	20760	14532	10899	7266	-	5709
		W	1604	887	665	444	-	267	1500	830	623	415	-	250	1398	774	580	387	-	233
35	1.7	Q(Btu/h)	14740	10318	7739	5159	-	4054	15780	11046	8285	5523	-	4340	16900	11830	8873	5915	-	4648
		W	1427	789	592	395	-	238	1326	734	550	367	-	221	1233	682	512	341	-	206
32	0.0	Q(Btu/h)	14080	9856	7392	4928	-	3872	14900	10430	7823	5215	-	4098	15480	10836	8127	5418	-	4257
		W	1352	748	561	374	-	225	1245	689	517	344	-	208	1163	643	482	322	-	194
27	-2.8	Q(Btu/h)	13420	9394	7046	4697	-	3691	14100	9870	7403	4935	-	3878	14620	10234	7676	5117	-	4021
		W	1242	687	515	344	-	207	1134	627	471	314	-	189	1061	587	440	293	-	177
22	-5.6	Q(Btu/h)	12840	8988	6741	4494	-	3531	13520	9464	7098	4732	-	3718	14040	9828	7371	4914	-	3861
		W	1152	637	478	319	-	192	1068	591	443	295	-	178	980	542	406	271	-	163
17	-8.3	Q(Btu/h)	12400	8680	6510	4340	-	3410	13060	9142	6857	4571	-	3592	13520	9464	7098	4732	-	3718
		W	1083	599	449	300	-	181	1011	559	420	280	-	169	920	509	382	254	-	153
12	-11.1	Q(Btu/h)	11940	8358	6269	4179	-	3284	12600	8820	6615	4410	-	3465	13100	9170	6878	4585	-	3603
		W	1011	559	420	280	-	169	957	530	397	265	-	160	881	487	365	244	-	147
5	-15.0	Q(Btu/h)	11300	7910	5933	3955	-	3108	11780	8246	6185	4123	-	3240	12080	8456	6342	4228	-	3322
		W	921	510	382	255	-	154	884	489	367	244	-	147	816	452	339	226	-	136
2	-16.7	Q(Btu/h)	10780	7546	5660	3773	-	2965	11120	7784	5838	3892	-	3058	11360	7952	5964	3976	-	3124
		W	884	489	367	244	-	147	852	471	354	236	-	142	791	437	328	219	-	132
-3	-19.4	Q(Btu/h)	9740	6818	5114	3409	-	2679	10060	7042	5282	3521	-	2767	10220	7154	5366	3577	-	2811
		W	828	458	344	229	-	138	800	442	332	221	-	133	752	416	312	208	-	125
-8	-22.2	Q(Btu/h)	8680	6076	4557	3038	-	2387	8960	6272	4704	3136	-	2464	9060	6342	4757	3171	-	2492
		W	774	428	321	214	-	129	747	413	310	207	-	125	713	394	296	197	-	119
-13	-25.0	Q(Btu/h)	7620	5334	4001	2667	-	2096	7860	5502	4127	2751	-	2162	7880	5516	4137	2758	-	2167
		W	723	400	300	200	-	121	693	383	288	192	-	116	677	374	281	187	-	113

PVA-A12AA8
PUZ-A12NKA8
1) COOLING

Rated
Q(Btu/h): 12000
W: 890

Indoor W.B.			72°F / 22.2°C						67°F / 19.4°C						64°F / 17.8°C						61°F / 16.1°C					
Outdoor D.B.			Max	Rated	75%	50%	25%	Min	Max	Rated	75%	50%	25%	Min	Max	Rated	75%	50%	25%	Min	Max	Rated	75%	50%	25%	Min
(°F)	(°C)																									
115	46.1	Q(Btu/h)	11592	11592	8694	5796	-	4637	10956	10956	8217	5478	-	4382	10332	10332	7749	5166	-	4133	9696	9696	7272	4848	-	3878
		W	1072	1072	804	536	-	301	1050	1050	788	525	-	295	1031	1031	773	515	-	290	1013	1013	760	506	-	285
110	43.3	Q(Btu/h)	11904	11904	8928	5952	-	4762	11232	11232	8424	5616	-	4493	10548	10548	7911	5274	-	4219	9948	9948	7461	4974	-	3979
		W	1024	1024	768	512	-	288	1005	1005	754	502	-	282	987	987	740	494	-	277	969	969	727	485	-	272
106	41.1	Q(Btu/h)	12168	12168	9126	6084	-	4867	11484	11484	8613	5742	-	4594	10788	10788	8091	5394	-	4315	10152	10152	7614	5076	-	4061
		W	996	996	747	498	-	280	969	969	727	485	-	272	951	951	714	476	-	267	935	935	701	467	-	263
102	38.9	Q(Btu/h)	12372	12372	9279	6186	-	4949	11700	11700	8775	5850	-	4680	10968	10968	8226	5484	-	4387	10296	10296	7722	5148	-	4118
		W	965	965	724	482	-	271	947	947	710	473	-	266	926	926	694	463	-	260	908	908	681	454	-	255
98	36.7	Q(Btu/h)	12552	12552	9414	6276	-	5021	11844	11844	8883	5922	-	4738	11148	11148	8361	5574	-	4459	10452	10452	7839	5226	-	4181
		W	935	935	701	467	-	263	917	917	688	458	-	258	899	899	674	449	-	253	881	881	661	441	-	248
94	34.4	Q(Btu/h)	12720	12720	9540	6360	-	5088	12000	12000	9000	6000	-	4800	11292	11292	8469	5646	-	4517	10596	10596	7947	5298	-	4238
		W	908	908	681	454	-	255	890	890	668	445	-	250	874	874	655	437	-	246	853	853	639	426	-	240
90	32.2	Q(Btu/h)	12900	12900	9675	6450	-	5160	12144	12144	9108	6072	-	4858	11436	11436	8577	5718	-	4574	10740	10740	8055	5370	-	4296
		W	881	881	661	441	-	248	863	863	647	432	-	243	846	846	634	423	-	238	829	829	621	414	-	233
86	30.0	Q(Btu/h)	13068	13068	9801	6534	-	5227	12324	12324	9243	6162	-	4930	11592	11592	8694	5796	-	4637	10884	10884	8163	5442	-	4354
		W	857	857	643	429	-	241	841	841	631	421	-	236	824	824	618	412	-	232	806	806	605	403	-	227
82	27.8	Q(Btu/h)	13188	13188	9891	6594	-	5275	12432	12432	9324	6216	-	4973	11676	11676	8757	5838	-	4670	10968	10968	8226	5484	-	4387
		W	842	842	631	421	-	237	824	824	618	412	-	232	802	802	601	401	-	225	789	789	591	394	-	222
78	25.6	Q(Btu/h)	13308	13308	9981	6654	-	5323	12552	12552	9414	6276	-	5021	11808	11808	8856	5904	-	4723	11064	11064	8298	5532	-	4426
		W	821	821	616	411	-	231	805	805	604	403	-	226	788	788	591	394	-	221	768	768	576	384	-	216
74	23.3	Q(Btu/h)	13368	13368	10026	6684	-	5347	12612	12612	9459	6306	-	5045	11904	11904	8928	5952	-	4762	11148	11148	8361	5574	-	4459
		W	806	806	605	403	-	227	789	789	591	394	-	222	771	771	578	385	-	217	754	754	565	377	-	212
70	21.1	Q(Btu/h)	13428	13428	10071	6714	-	5371	12660	12660	9495	6330	-	5064	11964	11964	8973	5982	-	4786	11208	11208	8406	5604	-	4483
		W	793	793	595	396	-	223	775	775	581	388	-	218	757	757	568	379	-	213	740	740	555	370	-	208
66	18.9	Q(Btu/h)	13512	13512	10134	6756	-	5405	12780	12780	9585	6390	-	5112	12024	12024	9018	6012	-	4810	11328	11328	8496	5664	-	4531
		W	780	780	585	390	-	219	762	762	571	381	-	214	745	745	559	372	-	209	727	727	545	364	-	204
62	16.7	Q(Btu/h)	13536	13536	10152	6768	-	5414	12816	12816	9612	6408	-	5126	12084	12084	9063	6042	-	4834	11376	11376	8532	5688	-	4550
		W	771	771	578	385	-	217	757	757	568	379	-	213	736	736	552	368	-	207	718	718	539	359	-	202
58	14.4	Q(Btu/h)	13584	13584	10188	6792	-	5434	12840	12840	9630	6420	-	5136	12072	12072	9054	6036	-	4829	11364	11364	8523	5682	-	4546
		W	761	761	571	380	-	214	742	742	557	371	-	209	724	724	543	362	-	204	705	705	529	352	-	198
54	12.2	Q(Btu/h)	13632	13632	10224	6816	-	5453	12900	12900	9675	6450	-	5160	12144	12144	9108	6072	-	4858	11436	11436	8577	5718	-	4574
		W	757	757	568	379	-	213	740	740	555	370	-	208	721	721	541	360	-	203	700	700	525	350	-	197
50	10.0	Q(Btu/h)	13656	13656	10242	6828	-	5462	12924	12924	9693	6462	-	5170	12204	12204	9153	6102	-	4882	11484	11484	8613	5742	-	4594
		W	748	748	561	374	-	210	729	729	547	364	-	205	709	709	532	355	-	199	690	690	517	345	-	194
46	7.8	Q(Btu/h)	13680	13680	10260	6840	-	5472	12960	12960	9720	6480	-	5184	12228	12228	9171	6114	-	4891	11532	11532	8649	5766	-	4613
		W	742	742	557	371	-	209	724	724	543	362	-	204	705	705	529	352	-	198	685	685	514	343	-	193
42	5.6	Q(Btu/h)	13692	13692	10269	6846	-	5477	12960	12960	9720	6480	-	5184	12252	12252	9189	6126	-	4901	11544	11544	8658	5772	-	4618
		W	740	740	555	370	-	208	722	722	541	361	-	203	700	700	525	350	-	197	680	680	510	340	-	191
38	3.3	Q(Btu/h)	13692	13692	10269	6846	-	5477	12984	12984	9738	6492	-	5194	12276	12276	9207	6138	-	4910	11580	11580	8685	5790	-	4632
		W	736	736	552	368	-	207	716	716	537	358	-	201	696	696	522	348	-	196	675	675	506	337	-	190
34	1.1	Q(Btu/h)	13704	13704	10278	6852	-	5482	12996	12996	9747	6498	-	5198	12300	12300	9225	6150	-	4920	11604	11604	8703	5802	-	4642
		W	733	733	550	367	-	206	715	715	536	357	-	201	694	694	521	347	-	195	674	674	505	337	-	189
30	-1.1	Q(Btu/h)	13704	13704	10278	6852	-	5482	12996	12996	9747	6498	-	5198	12312	12312	9234	6156	-	4925	11616	11616	8712	5808	-	4646
		W	733	733	550	367	-	206	712	712	534	356	-	200	692	692	519	346	-	195	671	671	503	336	-	189
26	-3.3	Q(Btu/h)	13716	13716	10287	6858	-	5486	13020	13020	9765	6510	-	5208	12336	12336	9252	6168	-	4934	11652	11652	8739	5826	-	4661
		W	732	732	549	366	-	206	710	710	533	355	-	200	691	691	518	345	-	194	669	669	502	335	-	188
23	-5.0	Q(Btu/h)	13716	13716	10287	6858	-	5486	13032	13032	9774	6516	-	5213	12348	12348	9261	6174	-	4939	11676	11676	8757	5838	-	4670
		W	730	730	547	365	-	205	710	710	533	355	-	200	690	690	517	345	-	194	669	669	502	335	-	188
18	-7.8	Q(Btu/h)	13752	13752	10314	6876	-	5501	13068	13068	9801	6534	-	5227	12348	12348	9261	6174	-	4939	11736	11736	8802	5868	-	4694
		W	727	727	545	364	-	204	709	709	532	355	-	199	689	689	517	344	-	194	669	669	502	335	-	188
14	-10.0	Q(Btu/h)	13752	13752	10314	6876	-	5501	13068	13068	9801	6534	-	5227	12396	12396	9297	6198	-	4958	11748	11748	8811	5874	-	4699
		W	729	729	547	364	-	205	709	709	532	355	-	199	691	691	518	345	-	194	670	670	503	335	-	188
10	-12.2	Q(Btu/h)	13776	13776	10332	6888	-	5510	13068	13068	9801	6534	-	5227	12432	12432	9324	6216	-	4973	11784	11784	8838	5892	-	4714
		W	728	728	546	364	-	205	709	709	532	355	-	199	692	692	519	346	-	194	671	671	503	336	-	189
6	-14.4	Q(Btu/h)	13788	13788	10341	6894	-	5515	13116	13116	9837	6558	-	5246	12456	12456	9342	6228	-	4982	11796	11796	8847	5898	-	4718
		W	728	728	546	364	-	205	710	710	533	355	-	200	692	692	519	346	-	195	674	674	505	337	-	189
2	-16.7	Q(Btu/h)	13824	13824	10368	6912	-	5530	13164	13164	9873	6582	-	5266	12492	12492	9369	6246	-	4997	11880	11880	8910	5940	-	4752
		W	727	727	545	364	-	204	710	710	533	355	-	200	692	692	519	346	-	195	675	675	506	337	-	190
0	-17.8	Q(Btu/h)	13848	13848	10386	6924	-	5539	13188	13188	9891	6594	-	5275	12528	12528	9396	6264	-	5011	11880	11880	8910	5940	-	4752
		W	727	727	545	364	-	204	711	711	533	356	-	200	694	694	521	347	-	195	676	676	507	338	-	190

PVA-A12AA8
PUZ-A12NKA8
2) HEATING

Rated
Q(Btu/h): 14000
W: 1070

Indoor D.B.			80°F / 26.7°C						70°F / 21.1°C						60°F / 15.6°C					
Outdoor W.B.			Max	Rated	75%	50%	25%	Min	Max	Rated	75%	50%	25%	Min	Max	Rated	75%	50%	25%	Min
(°F)	(°C)																			
70	21.1	Q(Btu/h)	25593	18858	14144	9429	-	7543	26372	19432	14574	9716	-	7773	27360	20160	15120	10080	-	8064
		W	2368	1465	1099	732	-	438	2206	1364	1023	682	-	408	2055	1271	953	636	-	380
65	18.3	Q(Btu/h)	24263	17878	13409	8939	-	7151	25042	18452	13839	9226	-	7381	25973	19138	14354	9569	-	7655
		W	2289	1416	1062	708	-	423	2124	1314	985	657	-	393	1984	1227	920	614	-	367
60	15.6	Q(Btu/h)	22990	16940	12705	8470	-	6776	23769	17514	13136	8757	-	7006	24643	18158	13619	9079	-	7263
		W	2187	1352	1014	676	-	404	2047	1266	949	633	-	379	1915	1184	888	592	-	354
55	12.8	Q(Btu/h)	21660	15960	11970	7980	-	6384	22439	16534	12401	8267	-	6614	23256	17136	12852	8568	-	6854
		W	2123	1313	985	656	-	393	1964	1214	911	607	-	363	1848	1143	857	571	-	342
50	10.0	Q(Btu/h)	20349	14994	11246	7497	-	5998	21109	15554	11666	7777	-	6222	21888	16128	12096	8064	-	6451
		W	2040	1262	946	631	-	377	1884	1165	874	583	-	348	1782	1102	827	551	-	330
47	8.3	Q(Btu/h)	19513	14378	10784	7189	-	5751	20273	14938	11204	7469	-	5975	21033	15498	11624	7749	-	6199
		W	1974	1221	916	610	-	365	1832	1133	850	567	-	339	1725	1067	800	533	-	319
42	5.6	Q(Btu/h)	18202	13412	10059	6706	-	5365	19000	14000	10500	7000	-	5600	19722	14532	10899	7266	-	5813
		W	1849	1144	858	572	-	342	1730	1070	803	535	-	320	1612	997	748	499	-	298
35	1.7	Q(Btu/h)	14003	10318	7739	5159	-	4127	14991	11046	8285	5523	-	4418	16055	11830	8873	5915	-	4732
		W	1645	1018	763	509	-	304	1529	946	709	473	-	283	1422	880	660	440	-	263
32	0.0	Q(Btu/h)	13376	9856	7392	4928	-	3942	14155	10430	7823	5215	-	4172	14706	10836	8127	5418	-	4334
		W	1559	964	723	482	-	288	1436	888	666	444	-	266	1341	829	622	415	-	248
27	-2.8	Q(Btu/h)	12749	9394	7046	4697	-	3758	13395	9870	7403	4935	-	3948	13889	10234	7676	5117	-	4094
		W	1432	886	664	443	-	265	1308	809	607	404	-	242	1223	756	567	378	-	226
22	-5.6	Q(Btu/h)	12198	8988	6741	4494	-	3595	12844	9464	7098	4732	-	3786	13338	9828	7371	4914	-	3931
		W	1329	822	616	411	-	246	1232	762	571	381	-	228	1130	699	524	349	-	209
17	-8.3	Q(Btu/h)	11780	8680	6510	4340	-	3472	12407	9142	6857	4571	-	3657	12844	9464	7098	4732	-	3786
		W	1249	773	579	386	-	231	1166	721	541	361	-	216	1060	656	492	328	-	196
12	-11.1	Q(Btu/h)	11343	8358	6269	4179	-	3343	11970	8820	6615	4410	-	3528	12445	9170	6878	4585	-	3668
		W	1166	721	541	361	-	216	1104	683	512	341	-	204	1016	628	471	314	-	188
5	-15.0	Q(Btu/h)	10735	7910	5933	3955	-	3164	11191	8246	6185	4123	-	3298	11476	8456	6342	4228	-	3382
		W	1062	657	493	328	-	196	1019	630	473	315	-	188	941	582	437	291	-	174
2	-16.7	Q(Btu/h)	10241	7546	5660	3773	-	3018	10564	7784	5838	3892	-	3114	10792	7952	5964	3976	-	3181
		W	1019	630	473	315	-	188	983	608	456	304	-	182	912	564	423	282	-	169
-3	-19.4	Q(Btu/h)	9253	6818	5114	3409	-	2727	9557	7042	5282	3521	-	2817	9709	7154	5366	3577	-	2862
		W	955	591	443	295	-	177	922	570	428	285	-	171	867	536	402	268	-	160
-8	-22.2	Q(Btu/h)	8246	6076	4557	3038	-	2430	8512	6272	4704	3136	-	2509	8607	6342	4757	3171	-	2537
		W	893	552	414	276	-	165	862	533	400	266	-	159	822	508	381	254	-	152
-13	-25.0	Q(Btu/h)	7239	5334	4001	2667	-	2134	7467	5502	4127	2751	-	2201	7486	5516	4137	2758	-	2206
		W	834	516	387	258	-	154	799	494	371	247	-	148	780	483	362	241	-	144

PKA-A12LA1
PUZ-A12NKA8
1) COOLING

Rated
Q(Btu/h): 12000
W: 900

Indoor W.B.			72°F / 22.2°C						67°F / 19.4°C						64°F / 17.8°C						61°F / 16.1°C					
Outdoor D.B.			Max	Rated	75%	50%	25%	Min	Max	Rated	75%	50%	25%	Min	Max	Rated	75%	50%	25%	Min	Max	Rated	75%	50%	25%	Min
(°F)	(°C)																									
115	46.1	Q(Btu/h)	11592	11592	8694	5796	-	4250	10956	10956	8217	5478	-	4017	10332	10332	7749	5166	-	3788	9696	9696	7272	4848	-	3555
		W	1084	1084	813	542	-	313	1062	1062	797	531	-	307	1042	1042	782	521	-	301	1024	1024	768	512	-	296
110	43.3	Q(Btu/h)	11904	11904	8928	5952	-	4365	11232	11232	8424	5616	-	4118	10548	10548	7911	5274	-	3868	9948	9948	7461	4974	-	3648
		W	1035	1035	776	518	-	299	1016	1016	762	508	-	294	998	998	749	499	-	288	980	980	735	490	-	283
106	41.1	Q(Btu/h)	12168	12168	9126	6084	-	4462	11484	11484	8613	5742	-	4211	10788	10788	8091	5394	-	3956	10152	10152	7614	5076	-	3722
		W	1007	1007	755	504	-	291	980	980	735	490	-	283	962	962	722	481	-	278	945	945	709	473	-	273
102	38.9	Q(Btu/h)	12372	12372	9279	6186	-	4536	11700	11700	8775	5850	-	4290	10968	10968	8226	5484	-	4022	10296	10296	7722	5148	-	3775
		W	976	976	732	488	-	282	958	958	718	479	-	277	936	936	702	468	-	270	918	918	689	459	-	265
98	36.7	Q(Btu/h)	12552	12552	9414	6276	-	4602	11844	11844	8883	5922	-	4343	11148	11148	8361	5574	-	4088	10452	10452	7839	5226	-	3832
		W	945	945	709	473	-	273	927	927	695	464	-	268	909	909	682	455	-	263	891	891	668	446	-	257
94	34.4	Q(Btu/h)	12720	12720	9540	6360	-	4664	12000	12000	9000	6000	-	4400	11292	11292	8469	5646	-	4140	10596	10596	7947	5298	-	3885
		W	918	918	689	459	-	265	900	900	675	450	-	260	884	884	663	442	-	255	862	862	647	431	-	249
90	32.2	Q(Btu/h)	12900	12900	9675	6450	-	4730	12144	12144	9108	6072	-	4453	11436	11436	8577	5718	-	4193	10740	10740	8055	5370	-	3938
		W	891	891	668	446	-	257	873	873	655	437	-	252	855	855	641	428	-	247	838	838	628	419	-	242
86	30.0	Q(Btu/h)	13068	13068	9801	6534	-	4792	12324	12324	9243	6162	-	4519	11592	11592	8694	5796	-	4250	10884	10884	8163	5442	-	3991
		W	867	867	650	433	-	250	851	851	638	425	-	246	833	833	625	417	-	241	815	815	612	408	-	236
82	27.8	Q(Btu/h)	13188	13188	9891	6594	-	4836	12432	12432	9324	6216	-	4558	11676	11676	8757	5838	-	4281	10968	10968	8226	5484	-	4022
		W	851	851	639	426	-	246	833	833	625	417	-	241	811	811	608	405	-	234	797	797	598	399	-	230
78	25.6	Q(Btu/h)	13308	13308	9981	6654	-	4880	12552	12552	9414	6276	-	4602	11808	11808	8856	5904	-	4330	11064	11064	8298	5532	-	4057
		W	831	831	623	415	-	240	815	815	611	407	-	235	797	797	597	398	-	230	777	777	583	388	-	224
74	23.3	Q(Btu/h)	13368	13368	10026	6684	-	4902	12612	12612	9459	6306	-	4624	11904	11904	8928	5952	-	4365	11148	11148	8361	5574	-	4088
		W	815	815	612	408	-	236	797	797	598	399	-	230	779	779	585	390	-	225	762	762	572	381	-	220
70	21.1	Q(Btu/h)	13428	13428	10071	6714	-	4924	12660	12660	9495	6330	-	4642	11964	11964	8973	5982	-	4387	11208	11208	8406	5604	-	4110
		W	802	802	601	401	-	232	784	784	588	392	-	226	766	766	574	383	-	221	749	749	562	374	-	216
66	18.9	Q(Btu/h)	13512	13512	10134	6756	-	4954	12780	12780	9585	6390	-	4686	12024	12024	9018	6012	-	4409	11328	11328	8496	5664	-	4154
		W	788	788	591	394	-	228	770	770	578	385	-	223	753	753	565	377	-	218	735	735	551	368	-	212
62	16.7	Q(Btu/h)	13536	13536	10152	6768	-	4963	12816	12816	9612	6408	-	4699	12084	12084	9063	6042	-	4431	11376	11376	8532	5688	-	4171
		W	779	779	585	390	-	225	766	766	574	383	-	221	744	744	558	372	-	215	726	726	545	363	-	210
58	14.4	Q(Btu/h)	13584	13584	10188	6792	-	4981	12840	12840	9630	6420	-	4708	12072	12072	9054	6036	-	4426	11364	11364	8523	5682	-	4167
		W	770	770	577	385	-	222	751	751	563	375	-	217	733	733	549	366	-	212	713	713	535	356	-	206
54	12.2	Q(Btu/h)	13632	13632	10224	6816	-	4998	12900	12900	9675	6450	-	4730	12144	12144	9108	6072	-	4453	11436	11436	8577	5718	-	4193
		W	766	766	574	383	-	221	749	749	562	374	-	216	729	729	547	365	-	211	708	708	531	354	-	205
50	10.0	Q(Btu/h)	13656	13656	10242	6828	-	5007	12924	12924	9693	6462	-	4739	12204	12204	9153	6102	-	4475	11484	11484	8613	5742	-	4211
		W	756	756	567	378	-	218	737	737	553	369	-	213	717	717	538	359	-	207	698	698	523	349	-	202
46	7.8	Q(Btu/h)	13680	13680	10260	6840	-	5016	12960	12960	9720	6480	-	4752	12228	12228	9171	6114	-	4484	11532	11532	8649	5766	-	4228
		W	751	751	563	375	-	217	733	733	549	366	-	212	713	713	535	356	-	206	693	693	520	347	-	200
42	5.6	Q(Btu/h)	13692	13692	10269	6846	-	5020	12960	12960	9720	6480	-	4752	12252	12252	9189	6126	-	4492	11544	11544	8658	5772	-	4233
		W	749	749	562	374	-	216	730	730	547	365	-	211	708	708	531	354	-	205	688	688	516	344	-	199
38	3.3	Q(Btu/h)	13692	13692	10269	6846	-	5020	12984	12984	9738	6492	-	4761	12276	12276	9207	6138	-	4501	11580	11580	8685	5790	-	4246
		W	744	744	558	372	-	215	725	725	543	362	-	209	704	704	528	352	-	203	682	682	512	341	-	197
34	1.1	Q(Btu/h)	13704	13704	10278	6852	-	5025	12996	12996	9747	6498	-	4765	12300	12300	9225	6150	-	4510	11604	11604	8703	5802	-	4255
		W	742	742	556	371	-	214	723	723	542	361	-	209	702	702	527	351	-	203	681	681	511	341	-	197
30	-1.1	Q(Btu/h)	13704	13704	10278	6852	-	5025	12996	12996	9747	6498	-	4765	12312	12312	9234	6156	-	4514	11616	11616	8712	5808	-	4259
		W	742	742	556	371	-	214	720	720	540	360	-	208	700	700	525	350	-	202	679	679	509	339	-	196
26	-3.3	Q(Btu/h)	13716	13716	10287	6858	-	5029	13020	13020	9765	6510	-	4774	12336	12336	9252	6168	-	4523	11652	11652	8739	5826	-	4272
		W	740	740	555	370	-	214	718	718	539	359	-	207	698	698	524	349	-	202	677	677	508	338	-	196
23	-5.0	Q(Btu/h)	13716	13716	10287	6858	-	5029	13032	13032	9774	6516	-	4778	12348	12348	9261	6174	-	4528	11676	11676	8757	5838	-	4281
		W	738	738	554	369	-	213	718	718	539	359	-	207	698	698	523	349	-	202	677	677	508	338	-	196
18	-7.8	Q(Btu/h)	13752	13752	10314	6876	-	5042	13068	13068	9801	6534	-	4792	12348	12348	9261	6174	-	4528	11736	11736	8802	5868	-	4303
		W	735	735	551	368	-	212	717	717	538	359	-	207	697	697	522	348	-	201	677	677	508	338	-	196
14	-10.0	Q(Btu/h)	13752	13752	10314	6876	-	5042	13068	13068	9801	6534	-	4792	12396	12396	9297	6198	-	4545	11748	11748	8811	5874	-	4308
		W	737	737	553	369	-	213	717	717	538	359	-	207	698	698	524	349	-	202	678	678	508	339	-	196
10	-12.2	Q(Btu/h)	13776	13776	10332	6888	-	5051	13068	13068	9801	6534	-	4792	12432	12432	9324	6216	-	4558	11784	11784	8838	5892	-	4321
		W	736	736	552	368	-	213	717	717	538	359	-	207	699	699	524	350	-	202	679	679	509	339	-	196
6	-14.4	Q(Btu/h)	13788	13788	10341	6894	-	5056	13116	13116	9837	6558	-	4809	12456	12456	9342	6228	-	4567	11796	11796	8847	5898	-	4325
		W	736	736	552	368	-	213	718	718	539	359	-	207	700	700	525	350	-	202	681	681	511	341	-	197
2	-16.7	Q(Btu/h)	13824	13824	10368	6912	-	5069	13164	13164	9873	6582	-	4827	12492	12492	9369	6246	-	4580	11880	11880	8910	5940	-	4356
		W	735	735	551	368	-	212	718	718	539	359	-	207	700	700	525	350	-	202	682	682	512	341	-	197
0	-17.8	Q(Btu/h)	13848	13848	10386	6924	-	5078	13188	13188	9891	6594	-	4836	12528	12528	9396	6264	-	4594	11880	11880	8910	5940	-	4356
		W	735	735	551	368	-	212	719	719	539	360	-	208	702	702	527	351	-	203	684	684	513	342	-	198

PKA-A12LA1
PUZ-A12NKA8
2) HEATING

Rated
Q(Btu/h): 14000
W: 1030

Indoor D.B.			80°F / 26.7°C						70°F / 21.1°C						60°F / 15.6°C					
Outdoor W.B.			Max	Rated	75%	50%	25%	Min	Max	Rated	75%	50%	25%	Min	Max	Rated	75%	50%	25%	Min
(°F)	(°C)																			
70	21.1	Q(Btu/h)	24246	18858	14144	9429	-	5927	24984	19432	14574	9716	-	6107	25920	20160	15120	10080	-	6336
		W	2190	1410	1058	705	-	315	2040	1313	985	657	-	293	1901	1224	918	612	-	273
65	18.3	Q(Btu/h)	22986	17878	13409	8939	-	5619	23724	18452	13839	9226	-	5799	24606	19138	14354	9569	-	6015
		W	2117	1363	1022	681	-	304	1965	1265	949	632	-	282	1835	1181	886	591	-	264
60	15.6	Q(Btu/h)	21780	16940	12705	8470	-	5324	22518	17514	13136	8757	-	5504	23346	18158	13619	9079	-	5707
		W	2022	1302	976	651	-	291	1893	1218	914	609	-	272	1771	1140	855	570	-	255
55	12.8	Q(Btu/h)	20520	15960	11970	7980	-	5016	21258	16534	12401	8267	-	5196	22032	17136	12852	8568	-	5386
		W	1963	1264	948	632	-	282	1816	1169	877	585	-	261	1709	1100	825	550	-	246
50	10.0	Q(Btu/h)	19278	14994	11246	7497	-	4712	19998	15554	11666	7777	-	4888	20736	16128	12096	8064	-	5069
		W	1886	1214	911	607	-	271	1742	1122	841	561	-	250	1648	1061	796	530	-	237
47	8.3	Q(Btu/h)	18486	14378	10784	7189	-	4519	19206	14938	11204	7469	-	4695	19926	15498	11624	7749	-	4871
		W	1826	1175	881	588	-	262	1694	1091	818	545	-	244	1595	1027	770	513	-	229
42	5.6	Q(Btu/h)	17244	13412	10059	6706	-	4215	18000	14000	10500	7000	-	4400	18684	14532	10899	7266	-	4567
		W	1710	1101	826	551	-	246	1600	1030	773	515	-	230	1491	960	720	480	-	214
35	1.7	Q(Btu/h)	13266	10318	7739	5159	-	3243	14202	11046	8285	5523	-	3472	15210	11830	8873	5915	-	3718
		W	1522	980	735	490	-	219	1414	911	683	455	-	203	1315	847	635	423	-	189
32	0.0	Q(Btu/h)	12672	9856	7392	4928	-	3098	13410	10430	7823	5215	-	3278	13932	10836	8127	5418	-	3406
		W	1442	928	696	464	-	207	1328	855	641	427	-	191	1240	798	599	399	-	178
27	-2.8	Q(Btu/h)	12078	9394	7046	4697	-	2952	12690	9870	7403	4935	-	3102	13158	10234	7676	5117	-	3216
		W	1325	853	640	426	-	190	1210	779	584	389	-	174	1131	728	546	364	-	163
22	-5.6	Q(Btu/h)	11556	8988	6741	4494	-	2825	12168	9464	7098	4732	-	2974	12636	9828	7371	4914	-	3089
		W	1229	791	593	396	-	177	1139	733	550	367	-	164	1045	673	504	336	-	150
17	-8.3	Q(Btu/h)	11160	8680	6510	4340	-	2728	11754	9142	6857	4571	-	2873	12168	9464	7098	4732	-	2974
		W	1155	744	558	372	-	166	1078	694	521	347	-	155	981	631	474	316	-	141
12	-11.1	Q(Btu/h)	10746	8358	6269	4179	-	2627	11340	8820	6615	4410	-	2772	11790	9170	6878	4585	-	2882
		W	1078	694	521	347	-	155	1021	657	493	329	-	147	939	605	453	302	-	135
5	-15.0	Q(Btu/h)	10170	7910	5933	3955	-	2486	10602	8246	6185	4123	-	2592	10872	8456	6342	4228	-	2658
		W	982	632	474	316	-	141	942	607	455	303	-	135	870	560	420	280	-	125
2	-16.7	Q(Btu/h)	9702	7546	5660	3773	-	2372	10008	7784	5838	3892	-	2446	10224	7952	5964	3976	-	2499
		W	942	607	455	303	-	135	909	585	439	293	-	131	843	543	407	271	-	121
-3	-19.4	Q(Btu/h)	8766	6818	5114	3409	-	2143	9054	7042	5282	3521	-	2213	9198	7154	5366	3577	-	2248
		W	883	569	426	284	-	127	853	549	412	274	-	123	802	516	387	258	-	115
-8	-22.2	Q(Btu/h)	7812	6076	4557	3038	-	1910	8064	6272	4704	3136	-	1971	8154	6342	4757	3171	-	1993
		W	826	531	399	266	-	119	797	513	385	256	-	115	760	489	367	245	-	109
-13	-25.0	Q(Btu/h)	6858	5334	4001	2667	-	1676	7074	5502	4127	2751	-	1729	7092	5516	4137	2758	-	1734
		W	771	496	372	248	-	111	739	476	357	238	-	106	722	465	348	232	-	104

PEAD-A12AA8
PUZ-A12NKA8
1) COOLING

Rated
Q(Btu/h): 12000
W: 890

Indoor W.B.			72°F / 22.2°C						67°F / 19.4°C						64°F / 17.8°C						61°F / 16.1°C					
Outdoor D.B.			Max	Rated	75%	50%	25%	Min	Max	Rated	75%	50%	25%	Min	Max	Rated	75%	50%	25%	Min	Max	Rated	75%	50%	25%	Min
(°F)	(°C)																									
115	46.1	Q(Btu/h)	11592	11592	8694	5796	-	4540	10956	10956	8217	5478	-	4291	10332	10332	7749	5166	-	4047	9696	9696	7272	4848	-	3798
		W	1072	1072	804	536	-	313	1050	1050	788	525	-	307	1031	1031	773	515	-	301	1013	1013	760	506	-	296
110	43.3	Q(Btu/h)	11904	11904	8928	5952	-	4662	11232	11232	8424	5616	-	4399	10548	10548	7911	5274	-	4131	9948	9948	7461	4974	-	3896
		W	1024	1024	768	512	-	299	1005	1005	754	502	-	294	987	987	740	494	-	288	969	969	727	485	-	283
106	41.1	Q(Btu/h)	12168	12168	9126	6084	-	4766	11484	11484	8613	5742	-	4498	10788	10788	8091	5394	-	4225	10152	10152	7614	5076	-	3976
		W	996	996	747	498	-	291	969	969	727	485	-	283	951	951	714	476	-	278	935	935	701	467	-	273
102	38.9	Q(Btu/h)	12372	12372	9279	6186	-	4846	11700	11700	8775	5850	-	4583	10968	10968	8226	5484	-	4296	10296	10296	7722	5148	-	4033
		W	965	965	724	482	-	282	947	947	710	473	-	277	926	926	694	463	-	270	908	908	681	454	-	265
98	36.7	Q(Btu/h)	12552	12552	9414	6276	-	4916	11844	11844	8883	5922	-	4639	11148	11148	8361	5574	-	4366	10452	10452	7839	5226	-	4094
		W	935	935	701	467	-	273	917	917	688	458	-	268	899	899	674	449	-	263	881	881	661	441	-	257
94	34.4	Q(Btu/h)	12720	12720	9540	6360	-	4982	12000	12000	9000	6000	-	4700	11292	11292	8469	5646	-	4423	10596	10596	7947	5298	-	4150
		W	908	908	681	454	-	265	890	890	668	445	-	260	874	874	655	437	-	255	853	853	639	426	-	249
90	32.2	Q(Btu/h)	12900	12900	9675	6450	-	5053	12144	12144	9108	6072	-	4756	11436	11436	8577	5718	-	4479	10740	10740	8055	5370	-	4207
		W	881	881	661	441	-	257	863	863	647	432	-	252	846	846	634	423	-	247	829	829	621	414	-	242
86	30.0	Q(Btu/h)	13068	13068	9801	6534	-	5118	12324	12324	9243	6162	-	4827	11592	11592	8694	5796	-	4540	10884	10884	8163	5442	-	4263
		W	857	857	643	429	-	250	841	841	631	421	-	246	824	824	618	412	-	241	806	806	605	403	-	236
82	27.8	Q(Btu/h)	13188	13188	9891	6594	-	5165	12432	12432	9324	6216	-	4869	11676	11676	8757	5838	-	4573	10968	10968	8226	5484	-	4296
		W	842	842	631	421	-	246	824	824	618	412	-	241	802	802	601	401	-	234	789	789	591	394	-	230
78	25.6	Q(Btu/h)	13308	13308	9981	6654	-	5212	12552	12552	9414	6276	-	4916	11808	11808	8856	5904	-	4625	11064	11064	8298	5532	-	4333
		W	821	821	616	411	-	240	805	805	604	403	-	235	788	788	591	394	-	230	768	768	576	384	-	224
74	23.3	Q(Btu/h)	13368	13368	10026	6684	-	5236	12612	12612	9459	6306	-	4940	11904	11904	8928	5952	-	4662	11148	11148	8361	5574	-	4366
		W	806	806	605	403	-	236	789	789	591	394	-	230	771	771	578	385	-	225	754	754	565	377	-	220
70	21.1	Q(Btu/h)	13428	13428	10071	6714	-	5259	12660	12660	9495	6330	-	4959	11964	11964	8973	5982	-	4686	11208	11208	8406	5604	-	4390
		W	793	793	595	396	-	232	775	775	581	388	-	226	757	757	568	379	-	221	740	740	555	370	-	216
66	18.9	Q(Btu/h)	13512	13512	10134	6756	-	5292	12780	12780	9585	6390	-	5006	12024	12024	9018	6012	-	4709	11328	11328	8496	5664	-	4437
		W	780	780	585	390	-	228	762	762	571	381	-	223	745	745	559	372	-	218	727	727	545	364	-	212
62	16.7	Q(Btu/h)	13536	13536	10152	6768	-	5302	12816	12816	9612	6408	-	5020	12084	12084	9063	6042	-	4733	11376	11376	8532	5688	-	4456
		W	771	771	578	385	-	225	757	757	568	379	-	221	736	736	552	368	-	215	718	718	539	359	-	210
58	14.4	Q(Btu/h)	13584	13584	10188	6792	-	5320	12840	12840	9630	6420	-	5029	12072	12072	9054	6036	-	4728	11364	11364	8523	5682	-	4451
		W	761	761	571	380	-	222	742	742	557	371	-	217	724	724	543	362	-	212	705	705	529	352	-	206
54	12.2	Q(Btu/h)	13632	13632	10224	6816	-	5339	12900	12900	9675	6450	-	5053	12144	12144	9108	6072	-	4756	11436	11436	8577	5718	-	4479
		W	757	757	568	379	-	221	740	740	555	370	-	216	721	721	541	360	-	211	700	700	525	350	-	205
50	10.0	Q(Btu/h)	13656	13656	10242	6828	-	5349	12924	12924	9693	6462	-	5062	12204	12204	9153	6102	-	4780	11484	11484	8613	5742	-	4498
		W	748	748	561	374	-	218	729	729	547	364	-	213	709	709	532	355	-	207	690	690	517	345	-	202
46	7.8	Q(Btu/h)	13680	13680	10260	6840	-	5358	12960	12960	9720	6480	-	5076	12228	12228	9171	6114	-	4789	11532	11532	8649	5766	-	4517
		W	742	742	557	371	-	217	724	724	543	362	-	212	705	705	529	352	-	206	685	685	514	343	-	200
42	5.6	Q(Btu/h)	13692	13692	10269	6846	-	5363	12960	12960	9720	6480	-	5076	12252	12252	9189	6126	-	4799	11544	11544	8658	5772	-	4521
		W	740	740	555	370	-	216	722	722	541	361	-	211	700	700	525	350	-	205	680	680	510	340	-	199
38	3.3	Q(Btu/h)	13692	13692	10269	6846	-	5363	12984	12984	9738	6492	-	5085	12276	12276	9207	6138	-	4808	11580	11580	8685	5790	-	4536
		W	736	736	552	368	-	215	716	716	537	358	-	209	696	696	522	348	-	203	675	675	506	337	-	197
34	1.1	Q(Btu/h)	13704	13704	10278	6852	-	5367	12996	12996	9747	6498	-	5090	12300	12300	9225	6150	-	4818	11604	11604	8703	5802	-	4545
		W	733	733	550	367	-	214	715	715	536	357	-	209	694	694	521	347	-	203	674	674	505	337	-	197
30	-1.1	Q(Btu/h)	13704	13704	10278	6852	-	5367	12996	12996	9747	6498	-	5090	12312	12312	9234	6156	-	4822	11616	11616	8712	5808	-	4550
		W	733	733	550	367	-	214	712	712	534	356	-	208	692	692	519	346	-	202	671	671	503	336	-	196
26	-3.3	Q(Btu/h)	13716	13716	10287	6858	-	5372	13020	13020	9765	6510	-	5100	12336	12336	9252	6168	-	4832	11652	11652	8739	5826	-	4564
		W	732	732	549	366	-	214	710	710	533	355	-	207	691	691	518	345	-	202	669	669	502	335	-	196
23	-5.0	Q(Btu/h)	13716	13716	10287	6858	-	5372	13032	13032	9774	6516	-	5104	12348	12348	9261	6174	-	4836	11676	11676	8757	5838	-	4573
		W	730	730	547	365	-	213	710	710	533	355	-	207	690	690	517	345	-	202	669	669	502	335	-	196
18	-7.8	Q(Btu/h)	13752	13752	10314	6876	-	5386	13068	13068	9801	6534	-	5118	12348	12348	9261	6174	-	4836	11736	11736	8802	5868	-	4597
		W	727	727	545	364	-	212	709	709	532	355	-	207	689	689	517	344	-	201	669	669	502	335	-	196
14	-10.0	Q(Btu/h)	13752	13752	10314	6876	-	5386	13068	13068	9801	6534	-	5118	12396	12396	9297	6198	-	4855	11748	11748	8811	5874	-	4601
		W	729	729	547	364	-	213	709	709	532	355	-	207	691	691	518	345	-	202	670	670	503	335	-	196
10	-12.2	Q(Btu/h)	13776	13776	10332	6888	-	5396	13068	13068	9801	6534	-	5118	12432	12432	9324	6216	-	4869	11784	11784	8838	5892	-	4615
		W	728	728	546	364	-	213	709	709	532	355	-	207	692	692	519	346	-	202	671	671	503	336	-	196
6	-14.4	Q(Btu/h)	13788	13788	10341	6894	-	5400	13116	13116	9837	6558	-	5137	12456	12456	9342	6228	-	4879	11796	11796	8847	5898	-	4620
		W	728	728	546	364	-	213	710	710	533	355	-	207	692	692	519	346	-	202	674	674	505	337	-	197
2	-16.7	Q(Btu/h)	13824	13824	10368	6912	-	5414	13164	13164	9873	6582	-	5156	12492	12492	9369	6246	-	4893	11880	11880	8910	5940	-	4653
		W	727	727	545	364	-	212	710	710	533	355	-	207	692	692	519	346	-	202	675	675	506	337	-	197
0	-17.8	Q(Btu/h)	13848	13848	10386	6924	-	5424	13188	13188	9891	6594	-	5165	12528	12528	9396	6264	-	4907	11880	11880	8910	5940	-	4653
		W	727	727	545	364	-	212	711	711	533	356	-	208	694	694	521	347	-	203	676	676	507	338	-	198

PEAD-A12AA8
PUZ-A12NKA8
2) HEATING

Rated
Q(Btu/h): 14000
W: 1090

Indoor D.B.			80°F / 26.7°C						70°F / 21.1°C						60°F / 15.6°C					
Outdoor W.B.			Max	Rated	75%	50%	25%	Min	Max	Rated	75%	50%	25%	Min	Max	Rated	75%	50%	25%	Min
(°F)	(°C)																			
70	21.1	Q(Btu/h)	24246	18858	14144	9429	-	7409	24984	19432	14574	9716	-	7634	25920	20160	15120	10080	-	7920
		W	2190	1492	1119	746	-	424	2040	1390	1042	695	-	395	1901	1295	971	647	-	368
65	18.3	Q(Btu/h)	22986	17878	13409	8939	-	7024	23724	18452	13839	9226	-	7249	24606	19138	14354	9569	-	7519
		W	2117	1442	1082	721	-	410	1965	1339	1004	669	-	381	1835	1250	938	625	-	356
60	15.6	Q(Btu/h)	21780	16940	12705	8470	-	6655	22518	17514	13136	8757	-	6881	23346	18158	13619	9079	-	7134
		W	2022	1378	1033	689	-	392	1893	1289	967	645	-	367	1771	1207	905	603	-	343
55	12.8	Q(Btu/h)	20520	15960	11970	7980	-	6270	21258	16534	12401	8267	-	6496	22032	17136	12852	8568	-	6732
		W	1963	1337	1003	669	-	380	1816	1237	928	619	-	352	1709	1164	873	582	-	331
50	10.0	Q(Btu/h)	19278	14994	11246	7497	-	5891	19998	15554	11666	7777	-	6111	20736	16128	12096	8064	-	6336
		W	1886	1285	964	643	-	365	1742	1187	890	594	-	338	1648	1123	842	561	-	319
47	8.3	Q(Btu/h)	18486	14378	10784	7189	-	5649	19206	14938	11204	7469	-	5869	19926	15498	11624	7749	-	6089
		W	1826	1244	933	622	-	354	1694	1154	866	577	-	328	1595	1087	815	543	-	309
42	5.6	Q(Btu/h)	17244	13412	10059	6706	-	5269	18000	14000	10500	7000	-	5500	18684	14532	10899	7266	-	5709
		W	1710	1165	874	583	-	331	1600	1090	818	545	-	310	1491	1016	762	508	-	289
35	1.7	Q(Btu/h)	13266	10318	7739	5159	-	4054	14202	11046	8285	5523	-	4340	15210	11830	8873	5915	-	4648
		W	1522	1037	777	518	-	295	1414	964	723	482	-	274	1315	896	672	448	-	255
32	0.0	Q(Btu/h)	12672	9856	7392	4928	-	3872	13410	10430	7823	5215	-	4098	13932	10836	8127	5418	-	4257
		W	1442	982	737	491	-	279	1328	905	679	452	-	257	1240	845	634	422	-	240
27	-2.8	Q(Btu/h)	12078	9394	7046	4697	-	3691	12690	9870	7403	4935	-	3878	13158	10234	7676	5117	-	4021
		W	1325	903	677	451	-	257	1210	824	618	412	-	234	1131	771	578	385	-	219
22	-5.6	Q(Btu/h)	11556	8988	6741	4494	-	3531	12168	9464	7098	4732	-	3718	12636	9828	7371	4914	-	3861
		W	1229	837	628	419	-	238	1139	776	582	388	-	221	1045	712	534	356	-	202
17	-8.3	Q(Btu/h)	11160	8680	6510	4340	-	3410	11754	9142	6857	4571	-	3592	12168	9464	7098	4732	-	3718
		W	1155	787	590	393	-	224	1078	735	551	367	-	209	981	668	501	334	-	190
12	-11.1	Q(Btu/h)	10746	8358	6269	4179	-	3284	11340	8820	6615	4410	-	3465	11790	9170	6878	4585	-	3603
		W	1078	735	551	367	-	209	1021	695	522	348	-	198	939	640	480	320	-	182
5	-15.0	Q(Btu/h)	10170	7910	5933	3955	-	3108	10602	8246	6185	4123	-	3240	10872	8456	6342	4228	-	3322
		W	982	669	502	335	-	190	942	642	482	321	-	183	870	593	445	296	-	169
2	-16.7	Q(Btu/h)	9702	7546	5660	3773	-	2965	10008	7784	5838	3892	-	3058	10224	7952	5964	3976	-	3124
		W	942	642	482	321	-	183	909	619	464	310	-	176	843	574	431	287	-	163
-3	-19.4	Q(Btu/h)	8766	6818	5114	3409	-	2679	9054	7042	5282	3521	-	2767	9198	7154	5366	3577	-	2811
		W	883	602	451	301	-	171	853	581	436	290	-	165	802	546	410	273	-	155
-8	-22.2	Q(Btu/h)	7812	6076	4557	3038	-	2387	8064	6272	4704	3136	-	2464	8154	6342	4757	3171	-	2492
		W	826	562	422	281	-	160	797	543	407	271	-	154	760	518	388	259	-	147
-13	-25.0	Q(Btu/h)	6858	5334	4001	2667	-	2096	7074	5502	4127	2751	-	2162	7092	5516	4137	2758	-	2167
		W	771	525	394	263	-	149	739	504	378	252	-	143	722	492	369	246	-	140

PLA-A18EA8
PUZ-A18NKA8
1) COOLING

Rated
Q(Btu/h): 18000
W: 1250

Indoor W.B.			72°F / 22.2°C						67°F / 19.4°C						64°F / 17.8°C						61°F / 16.1°C					
Outdoor D.B.			Max	Rated	75%	50%	25%	Min	Max	Rated	75%	50%	25%	Min	Max	Rated	75%	50%	25%	Min	Max	Rated	75%	50%	25%	Min
(°F)	(°C)																									
115	46.1	Q(Btu/h)	17388	17388	13041	8694	-	7728	16434	16434	12326	8217	-	7304	15498	15498	11624	7749	-	6888	14544	14544	10908	7272	-	6464
		W	1505	1505	1129	753	-	470	1475	1475	1106	738	-	460	1448	1448	1086	724	-	452	1423	1423	1067	711	-	444
110	43.3	Q(Btu/h)	17856	17856	13392	8928	-	7936	16848	16848	12636	8424	-	7488	15822	15822	11867	7911	-	7032	14922	14922	11192	7461	-	6632
		W	1438	1438	1078	719	-	449	1411	1411	1058	706	-	440	1386	1386	1040	693	-	433	1361	1361	1021	681	-	425
106	41.1	Q(Btu/h)	18252	18252	13689	9126	-	8112	17226	17226	12920	8613	-	7656	16182	16182	12137	8091	-	7192	15228	15228	11421	7614	-	6768
		W	1399	1399	1049	699	-	436	1361	1361	1021	681	-	425	1336	1336	1002	668	-	417	1313	1313	984	656	-	410
102	38.9	Q(Btu/h)	18558	18558	13919	9279	-	8248	17550	17550	13163	8775	-	7800	16452	16452	12339	8226	-	7312	15444	15444	11583	7722	-	6864
		W	1355	1355	1016	678	-	423	1330	1330	998	665	-	415	1300	1300	975	650	-	406	1275	1275	956	638	-	398
98	36.7	Q(Btu/h)	18828	18828	14121	9414	-	8368	17766	17766	13325	8883	-	7896	16722	16722	12542	8361	-	7432	15678	15678	11759	7839	-	6968
		W	1313	1313	984	656	-	410	1288	1288	966	644	-	402	1263	1263	947	631	-	394	1238	1238	928	619	-	386
94	34.4	Q(Btu/h)	19080	19080	14310	9540	-	8480	18000	18000	13500	9000	-	8000	16938	16938	12704	8469	-	7528	15894	15894	11921	7947	-	7064
		W	1275	1275	956	638	-	398	1250	1250	938	625	-	390	1228	1228	921	614	-	383	1198	1198	898	599	-	374
90	32.2	Q(Btu/h)	19350	19350	14513	9675	-	8600	18216	18216	13662	9108	-	8096	17154	17154	12866	8577	-	7624	16110	16110	12083	8055	-	7160
		W	1238	1238	928	619	-	386	1213	1213	909	606	-	378	1188	1188	891	594	-	371	1164	1164	873	582	-	363
86	30.0	Q(Btu/h)	19602	19602	14702	9801	-	8712	18486	18486	13865	9243	-	8216	17388	17388	13041	8694	-	7728	16326	16326	12245	8163	-	7256
		W	1204	1204	903	602	-	376	1181	1181	886	591	-	369	1158	1158	868	579	-	361	1133	1133	849	566	-	353
82	27.8	Q(Btu/h)	19782	19782	14837	9891	-	8792	18648	18648	13986	9324	-	8288	17514	17514	13136	8757	-	7784	16452	16452	12339	8226	-	7312
		W	1183	1183	887	591	-	369	1158	1158	868	579	-	361	1126	1126	845	563	-	351	1108	1108	831	554	-	346
78	25.6	Q(Btu/h)	19962	19962	14972	9981	-	8872	18828	18828	14121	9414	-	8368	17712	17712	13284	8856	-	7872	16596	16596	12447	8298	-	7376
		W	1154	1154	865	577	-	360	1131	1131	848	566	-	353	1106	1106	830	553	-	345	1079	1079	809	539	-	337
74	23.3	Q(Btu/h)	20052	20052	15039	10026	-	8912	18918	18918	14189	9459	-	8408	17856	17856	13392	8928	-	7936	16722	16722	12542	8361	-	7432
		W	1133	1133	849	566	-	353	1108	1108	831	554	-	346	1083	1083	812	541	-	338	1059	1059	794	529	-	330
70	21.1	Q(Btu/h)	20142	20142	15107	10071	-	8952	18990	18990	14243	9495	-	8440	17946	17946	13460	8973	-	7976	16812	16812	12609	8406	-	7472
		W	1114	1114	835	557	-	347	1089	1089	817	544	-	340	1064	1064	798	532	-	332	1040	1040	780	520	-	324
66	18.9	Q(Btu/h)	20268	20268	15201	10134	-	9008	19170	19170	14378	9585	-	8520	18036	18036	13527	9018	-	8016	16992	16992	12744	8496	-	7552
		W	1095	1095	821	548	-	342	1070	1070	803	535	-	334	1046	1046	785	523	-	326	1021	1021	766	511	-	319
62	16.7	Q(Btu/h)	20304	20304	15228	10152	-	9024	19224	19224	14418	9612	-	8544	18126	18126	13595	9063	-	8056	17064	17064	12798	8532	-	7584
		W	1083	1083	812	541	-	338	1064	1064	798	532	-	332	1034	1034	775	517	-	323	1009	1009	757	504	-	315
58	14.4	Q(Btu/h)	20376	20376	15282	10188	-	9056	19260	19260	14445	9630	-	8560	18108	18108	13581	9054	-	8048	17046	17046	12785	8523	-	7576
		W	1069	1069	802	534	-	333	1043	1043	782	521	-	325	1018	1018	763	509	-	317	990	990	743	495	-	309
54	12.2	Q(Btu/h)	20448	20448	15336	10224	-	9088	19350	19350	14513	9675	-	8600	18216	18216	13662	9108	-	8096	17154	17154	12866	8577	-	7624
		W	1064	1064	798	532	-	332	1040	1040	780	520	-	324	1013	1013	759	506	-	316	984	984	738	492	-	307
50	10.0	Q(Btu/h)	20484	20484	15363	10242	-	9104	19386	19386	14540	9693	-	8616	18306	18306	13730	9153	-	8136	17226	17226	12920	8613	-	7656
		W	1050	1050	788	525	-	328	1024	1024	768	512	-	319	996	996	747	498	-	311	969	969	727	484	-	302
46	7.8	Q(Btu/h)	20520	20520	15390	10260	-	9120	19440	19440	14580	9720	-	8640	18342	18342	13757	9171	-	8152	17298	17298	12974	8649	-	7688
		W	1043	1043	782	521	-	325	1018	1018	763	509	-	317	990	990	743	495	-	309	963	963	722	481	-	300
42	5.6	Q(Btu/h)	20538	20538	15404	10269	-	9128	19440	19440	14580	9720	-	8640	18378	18378	13784	9189	-	8168	17316	17316	12987	8658	-	7696
		W	1040	1040	780	520	-	324	1014	1014	760	507	-	316	984	984	738	492	-	307	955	955	716	478	-	298
38	3.3	Q(Btu/h)	20538	20538	15404	10269	-	9128	19476	19476	14607	9738	-	8656	18414	18414	13811	9207	-	8184	17370	17370	13028	8685	-	7720
		W	1034	1034	775	517	-	323	1006	1006	755	503	-	314	978	978	733	489	-	305	948	948	711	474	-	296
34	1.1	Q(Btu/h)	20556	20556	15417	10278	-	9136	19494	19494	14621	9747	-	8664	18450	18450	13838	9225	-	8200	17406	17406	13055	8703	-	7736
		W	1030	1030	773	515	-	321	1004	1004	753	502	-	313	975	975	731	488	-	304	946	946	710	473	-	295
30	-1.1	Q(Btu/h)	20556	20556	15417	10278	-	9136	19494	19494	14621	9747	-	8664	18468	18468	13851	9234	-	8208	17424	17424	13068	8712	-	7744
		W	1030	1030	773	515	-	321	1000	1000	750	500	-	312	973	973	729	486	-	303	943	943	707	471	-	294
26	-3.3	Q(Btu/h)	20574	20574	15431	10287	-	9144	19530	19530	14648	9765	-	8680	18504	18504	13878	9252	-	8224	17478	17478	13109	8739	-	7768
		W	1028	1028	771	514	-	321	998	998	748	499	-	311	970	970	728	485	-	303	940	940	705	470	-	293
23	-5.0	Q(Btu/h)	20574	20574	15431	10287	-	9144	19548	19548	14661	9774	-	8688	18522	18522	13892	9261	-	8232	17514	17514	13136	8757	-	7784
		W	1025	1025	769	513	-	320	998	998	748	499	-	311	969	969	727	484	-	302	940	940	705	470	-	293
18	-7.8	Q(Btu/h)	20628	20628	15471	10314	-	9168	19602	19602	14702	9801	-	8712	18522	18522	13892	9261	-	8232	17604	17604	13203	8802	-	7824
		W	1021	1021	766	511	-	319	996	996	747	498	-	311	968	968	726	484	-	302	940	940	705	470	-	293
14	-10.0	Q(Btu/h)	20628	20628	15471	10314	-	9168	19602	19602	14702	9801	-	8712	18594	18594	13946	9297	-	8264	17622	17622	13217	8811	-	7832
		W	1024	1024	768	512	-	319	996	996	747	498	-	311	970	970	728	485	-	303	941	941	706	471	-	294
10	-12.2	Q(Btu/h)	20664	20664	15498	10332	-	9184	19602	19602	14702	9801	-	8712	18648	18648	13986	9324	-	8288	17676	17676	13257	8838	-	7856
		W	1023	1023	767	511	-	319	996	996	747	498	-	311	971	971	728	486	-	303	943	943	707	471	-	294
6	-14.4	Q(Btu/h)	20682	20682	15512	10341	-	9192	19674	19674	14756	9837	-	8744	18684	18684	14013	9342	-	8304	17694	17694	13271	8847	-	7864
		W	1023	1023	767	511	-	319	998	998	748	499	-	311	973	973	729	486	-	303	946	946	710	473	-	295
2	-16.7	Q(Btu/h)	20736	20736	15552	10368	-	9216	19746	19746	14810	9873	-	8776	18738	18738	14054	9369	-	8328	17820	17820	13365	8910	-	7920
		W	1021	1021	766	511	-	319	998	998	748	499	-	311	973	973	729	486	-	303	948	948	711	474	-	296
0	-17.8	Q(Btu/h)	20772	20772	15579	10386	-	9232	19782	19782	14837	9891	-	8792	18792	18792	14094	9396	-	8352	17820	17820	13365	8910	-	7920
		W	1021	1021	766	511	-	319	999	999	749	499	-	312	975	975	731	488	-	304	950	950	713	475	-	296

PLA-A18EA8
PUZ-A18NKA8
2) HEATING

Rated
Q(Btu/h): 19000
W: 1300

Indoor D.B.			80°F / 26.7°C						70°F / 21.1°C						60°F / 15.6°C					
Outdoor W.B.			Max	Rated	75%	50%	25%	Min	Max	Rated	75%	50%	25%	Min	Max	Rated	75%	50%	25%	Min
(°F)	(°C)																			
70	21.1	Q(Btu/h)	30981	25593	19195	12797	-	10776	31924	26372	19779	13186	-	11104	33120	27360	20520	13680	-	11520
		W	2327	1780	1335	890	-	548	2168	1658	1243	829	-	510	2020	1544	1158	772	-	475
65	18.3	Q(Btu/h)	29371	24263	18197	12132	-	10216	30314	25042	18782	12521	-	10544	31441	25973	19480	12987	-	10936
		W	2249	1720	1290	860	-	529	2088	1596	1197	798	-	491	1950	1491	1118	746	-	459
60	15.6	Q(Btu/h)	27830	22990	17243	11495	-	9680	28773	23769	17827	11885	-	10008	29831	24643	18482	12322	-	10376
		W	2149	1643	1232	822	-	506	2011	1538	1153	769	-	473	1882	1439	1079	720	-	443
55	12.8	Q(Btu/h)	26220	21660	16245	10830	-	9120	27163	22439	16829	11220	-	9448	28152	23256	17442	11628	-	9792
		W	2086	1595	1196	798	-	491	1930	1476	1107	738	-	454	1816	1388	1041	694	-	427
50	10.0	Q(Btu/h)	24633	20349	15262	10175	-	8568	25553	21109	15832	10555	-	8888	26496	21888	16416	10944	-	9216
		W	2004	1533	1150	766	-	472	1851	1416	1062	708	-	436	1751	1339	1004	670	-	412
47	8.3	Q(Btu/h)	23621	19513	14635	9757	-	8216	24541	20273	15205	10137	-	8536	25461	21033	15775	10517	-	8856
		W	1940	1483	1112	742	-	456	1800	1377	1033	688	-	424	1695	1296	972	648	-	399
42	5.6	Q(Btu/h)	22034	18202	13652	9101	-	7664	23000	19000	14250	9500	-	8000	23874	19722	14792	9861	-	8304
		W	1817	1390	1042	695	-	428	1700	1300	975	650	-	400	1584	1212	909	606	-	373
35	1.7	Q(Btu/h)	16951	14003	10502	7002	-	5896	18147	14991	11243	7496	-	6312	19435	16055	12041	8028	-	6760
		W	1617	1236	927	618	-	380	1503	1149	862	575	-	354	1397	1069	801	534	-	329
32	0.0	Q(Btu/h)	16192	13376	10032	6688	-	5632	17135	14155	10616	7078	-	5960	17802	14706	11030	7353	-	6192
		W	1532	1171	878	586	-	360	1411	1079	809	540	-	332	1318	1008	756	504	-	310
27	-2.8	Q(Btu/h)	15433	12749	9562	6375	-	5368	16215	13395	10046	6698	-	5640	16813	13889	10417	6945	-	5848
		W	1408	1076	807	538	-	331	1285	983	737	491	-	302	1202	919	689	460	-	283
22	-5.6	Q(Btu/h)	14766	12198	9149	6099	-	5136	15548	12844	9633	6422	-	5408	16146	13338	10004	6669	-	5616
		W	1306	998	749	499	-	307	1210	926	694	463	-	285	1110	849	637	424	-	261
17	-8.3	Q(Btu/h)	14260	11780	8835	5890	-	4960	15019	12407	9305	6204	-	5224	15548	12844	9633	6422	-	5408
		W	1227	939	704	469	-	289	1146	876	657	438	-	270	1042	797	598	398	-	245
12	-11.1	Q(Btu/h)	13731	11343	8507	5672	-	4776	14490	11970	8978	5985	-	5040	15065	12445	9334	6223	-	5240
		W	1146	876	657	438	-	270	1085	829	622	415	-	255	998	763	572	382	-	235
5	-15.0	Q(Btu/h)	12995	10735	8051	5368	-	4520	13547	11191	8393	5596	-	4712	13892	11476	8607	5738	-	4832
		W	1044	798	599	399	-	246	1001	766	574	383	-	236	925	707	530	354	-	218
2	-16.7	Q(Btu/h)	12397	10241	7681	5121	-	4312	12788	10564	7923	5282	-	4448	13064	10792	8094	5396	-	4544
		W	1001	766	574	383	-	236	966	738	554	369	-	227	896	685	514	343	-	211
-3	-19.4	Q(Btu/h)	11201	9253	6940	4627	-	3896	11569	9557	7168	4779	-	4024	11753	9709	7282	4855	-	4088
		W	938	718	538	359	-	221	906	693	520	346	-	213	852	651	488	326	-	200
-8	-22.2	Q(Btu/h)	9982	8246	6185	4123	-	3472	10304	8512	6384	4256	-	3584	10419	8607	6455	4304	-	3624
		W	877	671	503	335	-	206	847	647	486	324	-	199	808	618	463	309	-	190
-13	-25.0	Q(Btu/h)	8763	7239	5429	3620	-	3048	9039	7467	5600	3734	-	3144	9062	7486	5615	3743	-	3152
		W	819	627	470	313	-	193	785	601	450	300	-	185	767	586	440	293	-	180

PVA-A18AA8
PUZ-A18NKA8
1) COOLING

Rated
Q(Btu/h): 18000
W: 1570

Indoor W.B.			72°F / 22.2°C						67°F / 19.4°C						64°F / 17.8°C						61°F / 16.1°C					
Outdoor D.B.			Max	Rated	75%	50%	25%	Min	Max	Rated	75%	50%	25%	Min	Max	Rated	75%	50%	25%	Min	Max	Rated	75%	50%	25%	Min
(°F)	(°C)																									
115	46.1	Q(Btu/h)	17388	17388	13041	8694	-	6762	16434	16434	12326	8217	-	6391	15498	15498	11624	7749	-	6027	14544	14544	10908	7272	-	5656
		W	1890	1890	1418	945	-	506	1853	1853	1389	926	-	496	1818	1818	1364	909	-	486	1787	1787	1340	893	-	478
110	43.3	Q(Btu/h)	17856	17856	13392	8928	-	6944	16848	16848	12636	8424	-	6552	15822	15822	11867	7911	-	6153	14922	14922	11192	7461	-	5803
		W	1806	1806	1354	903	-	483	1773	1773	1329	886	-	474	1741	1741	1306	871	-	466	1710	1710	1282	855	-	457
106	41.1	Q(Btu/h)	18252	18252	13689	9126	-	7098	17226	17226	12920	8613	-	6699	16182	16182	12137	8091	-	6293	15228	15228	11421	7614	-	5922
		W	1757	1757	1318	878	-	470	1710	1710	1282	855	-	457	1678	1678	1259	839	-	449	1649	1649	1236	824	-	441
102	38.9	Q(Btu/h)	18558	18558	13919	9279	-	7217	17550	17550	13163	8775	-	6825	16452	16452	12339	8226	-	6398	15444	15444	11583	7722	-	6006
		W	1702	1702	1276	851	-	455	1670	1670	1253	835	-	447	1633	1633	1225	816	-	437	1601	1601	1201	801	-	428
98	36.7	Q(Btu/h)	18828	18828	14121	9414	-	7322	17766	17766	13325	8883	-	6909	16722	16722	12542	8361	-	6503	15678	15678	11759	7839	-	6097
		W	1649	1649	1236	824	-	441	1617	1617	1213	809	-	433	1586	1586	1189	793	-	424	1554	1554	1166	777	-	416
94	34.4	Q(Btu/h)	19080	19080	14310	9540	-	7420	18000	18000	13500	9000	-	7000	16938	16938	12704	8469	-	6587	15894	15894	11921	7947	-	6181
		W	1601	1601	1201	801	-	428	1570	1570	1178	785	-	420	1542	1542	1156	771	-	412	1504	1504	1128	752	-	402
90	32.2	Q(Btu/h)	19350	19350	14513	9675	-	7525	18216	18216	13662	9108	-	7084	17154	17154	12866	8577	-	6671	16110	16110	12083	8055	-	6265
		W	1554	1554	1166	777	-	416	1523	1523	1142	761	-	407	1492	1492	1119	746	-	399	1462	1462	1096	731	-	391
86	30.0	Q(Btu/h)	19602	19602	14702	9801	-	7623	18486	18486	13865	9243	-	7189	17388	17388	13041	8694	-	6762	16326	16326	12245	8163	-	6349
		W	1512	1512	1134	756	-	404	1484	1484	1113	742	-	397	1454	1454	1090	727	-	389	1422	1422	1067	711	-	381
82	27.8	Q(Btu/h)	19782	19782	14837	9891	-	7693	18648	18648	13986	9324	-	7252	17514	17514	13136	8757	-	6811	16452	16452	12339	8226	-	6398
		W	1485	1485	1114	743	-	397	1454	1454	1090	727	-	389	1415	1415	1061	707	-	378	1391	1391	1043	696	-	372
78	25.6	Q(Btu/h)	19962	19962	14972	9981	-	7763	18828	18828	14121	9414	-	7322	17712	17712	13284	8856	-	6888	16596	16596	12447	8298	-	6454
		W	1449	1449	1087	725	-	388	1421	1421	1066	710	-	380	1389	1389	1042	695	-	372	1355	1355	1016	677	-	362
74	23.3	Q(Btu/h)	20052	20052	15039	10026	-	7798	18918	18918	14189	9459	-	7357	17856	17856	13392	8928	-	6944	16722	16722	12542	8361	-	6503
		W	1422	1422	1067	711	-	381	1391	1391	1043	696	-	372	1360	1360	1020	680	-	364	1330	1330	997	665	-	356
70	21.1	Q(Btu/h)	20142	20142	15107	10071	-	7833	18990	18990	14243	9495	-	7385	17946	17946	13460	8973	-	6979	16812	16812	12609	8406	-	6538
		W	1399	1399	1049	699	-	374	1367	1367	1026	684	-	366	1336	1336	1002	668	-	357	1306	1306	980	653	-	349
66	18.9	Q(Btu/h)	20268	20268	15201	10134	-	7882	19170	19170	14378	9585	-	7455	18036	18036	13527	9018	-	7014	16992	16992	12744	8496	-	6608
		W	1375	1375	1031	688	-	368	1344	1344	1008	672	-	360	1314	1314	986	657	-	352	1283	1283	962	641	-	343
62	16.7	Q(Btu/h)	20304	20304	15228	10152	-	7896	19224	19224	14418	9612	-	7476	18126	18126	13595	9063	-	7049	17064	17064	12798	8532	-	6636
		W	1360	1360	1020	680	-	364	1336	1336	1002	668	-	357	1298	1298	974	649	-	347	1267	1267	950	633	-	339
58	14.4	Q(Btu/h)	20376	20376	15282	10188	-	7924	19260	19260	14445	9630	-	7490	18108	18108	13581	9054	-	7042	17046	17046	12785	8523	-	6629
		W	1342	1342	1007	671	-	359	1309	1309	982	655	-	350	1278	1278	958	639	-	342	1243	1243	933	622	-	333
54	12.2	Q(Btu/h)	20448	20448	15336	10224	-	7952	19350	19350	14513	9675	-	7525	18216	18216	13662	9108	-	7084	17154	17154	12866	8577	-	6671
		W	1336	1336	1002	668	-	357	1306	1306	980	653	-	349	1272	1272	954	636	-	340	1236	1236	927	618	-	331
50	10.0	Q(Btu/h)	20484	20484	15363	10242	-	7966	19386	19386	14540	9693	-	7539	18306	18306	13730	9153	-	7119	17226	17226	12920	8613	-	6699
		W	1319	1319	989	659	-	353	1286	1286	964	643	-	344	1251	1251	938	626	-	335	1217	1217	913	608	-	326
46	7.8	Q(Btu/h)	20520	20520	15390	10260	-	7980	19440	19440	14580	9720	-	7560	18342	18342	13757	9171	-	7133	17298	17298	12974	8649	-	6727
		W	1309	1309	982	655	-	350	1278	1278	958	639	-	342	1243	1243	933	622	-	333	1209	1209	907	604	-	323
42	5.6	Q(Btu/h)	20538	20538	15404	10269	-	7987	19440	19440	14580	9720	-	7560	18378	18378	13784	9189	-	7147	17316	17316	12987	8658	-	6734
		W	1306	1306	980	653	-	349	1273	1273	955	637	-	341	1236	1236	927	618	-	331	1199	1199	900	600	-	321
38	3.3	Q(Btu/h)	20538	20538	15404	10269	-	7987	19476	19476	14607	9738	-	7574	18414	18414	13811	9207	-	7161	17370	17370	13028	8685	-	6755
		W	1298	1298	974	649	-	347	1264	1264	948	632	-	338	1228	1228	921	614	-	328	1190	1190	893	595	-	318
34	1.1	Q(Btu/h)	20556	20556	15417	10278	-	7994	19494	19494	14621	9747	-	7581	18450	18450	13838	9225	-	7175	17406	17406	13055	8703	-	6769
		W	1294	1294	970	647	-	346	1261	1261	946	630	-	337	1225	1225	918	612	-	328	1188	1188	891	594	-	318
30	-1.1	Q(Btu/h)	20556	20556	15417	10278	-	7994	19494	19494	14621	9747	-	7581	18468	18468	13851	9234	-	7182	17424	17424	13068	8712	-	6776
		W	1294	1294	970	647	-	346	1256	1256	942	628	-	336	1221	1221	916	611	-	327	1184	1184	888	592	-	317
26	-3.3	Q(Btu/h)	20574	20574	15431	10287	-	8001	19530	19530	14648	9765	-	7595	18504	18504	13878	9252	-	7196	17478	17478	13109	8739	-	6797
		W	1291	1291	968	645	-	345	1253	1253	940	626	-	335	1218	1218	914	609	-	326	1181	1181	885	590	-	316
23	-5.0	Q(Btu/h)	20574	20574	15431	10287	-	8001	19548	19548	14661	9774	-	7602	18522	18522	13892	9261	-	7203	17514	17514	13136	8757	-	6811
		W	1287	1287	966	644	-	344	1253	1253	940	626	-	335	1217	1217	913	608	-	326	1181	1181	885	590	-	316
18	-7.8	Q(Btu/h)	20628	20628	15471	10314	-	8022	19602	19602	14702	9801	-	7623	18522	18522	13892	9261	-	7203	17604	17604	13203	8802	-	6846
		W	1283	1283	962	641	-	343	1251	1251	938	626	-	335	1215	1215	911	608	-	325	1181	1181	885	590	-	316
14	-10.0	Q(Btu/h)	20628	20628	15471	10314	-	8022	19602	19602	14702	9801	-	7623	18594	18594	13946	9297	-	7231	17622	17622	13217	8811	-	6853
		W	1286	1286	964	643	-	344	1251	1251	938	626	-	335	1218	1218	914	609	-	326	1182	1182	887	591	-	316
10	-12.2	Q(Btu/h)	20664	20664	15498	10332	-	8036	19602	19602	14702	9801	-	7623	18648	18648	13986	9324	-	7252	17676	17676	13257	8838	-	6874
		W	1284	1284	963	642	-	344	1251	1251	938	626	-	335	1220	1220	915	610	-	326	1184	1184	888	592	-	317
6	-14.4	Q(Btu/h)	20682	20682	15512	10341	-	8043	19674	19674	14756	9837	-	7651	18684	18684	14013	9342	-	7266	17694	17694	13271	8847	-	6881
		W	1284	1284	963	642	-	344	1253	1253	940	626	-	335	1221	1221	916	611	-	327	1188	1188	891	594	-	318
2	-16.7	Q(Btu/h)	20736	20736	15552	10368	-	8064	19746	19746	14810	9873	-	7679	18738	18738	14054	9369	-	7287	17820	17820	13365	8910	-	6930
		W	1283	1283	962	641	-	343	1253	1253	940	626	-	335	1221	1221	916	611	-	327	1190	1190	893	595	-	318
0	-17.8	Q(Btu/h)	20772	20772	15579	10386	-	8078	19782	19782	14837	9891	-	7693	18792	18792	14094	9396	-	7308	17820	17820	13365	8910	-	6930
		W	1283	1283	962	641	-	343	1254	1254	941	627	-	336	1225	1225	918	612	-	328	1193	1193	895	597	-	319

PVA-A18AA8
PUZ-A18NKA8
2) HEATING

Rated
Q(Btu/h): 19000
W: 1470

Indoor D.B.			80°F / 26.7°C						70°F / 21.1°C						60°F / 15.6°C					
Outdoor W.B.			Max	Rated	75%	50%	25%	Min	Max	Rated	75%	50%	25%	Min	Max	Rated	75%	50%	25%	Min
(°F)	(°C)																			
70	21.1	Q(Btu/h)	30981	25593	19195	12797	-	10507	31924	26372	19779	13186	-	10826	33120	27360	20520	13680	-	11232
		W	2779	2012	1509	1006	-	589	2588	1874	1406	937	-	548	2412	1746	1310	873	-	511
65	18.3	Q(Btu/h)	29371	24263	18197	12132	-	9961	30314	25042	18782	12521	-	10280	31441	25973	19480	12987	-	10663
		W	2686	1945	1459	972	-	569	2493	1805	1354	903	-	528	2328	1686	1265	843	-	493
60	15.6	Q(Btu/h)	27830	22990	17243	11495	-	9438	28773	23769	17827	11885	-	9758	29831	24643	18482	12322	-	10117
		W	2566	1858	1394	929	-	544	2401	1739	1304	870	-	509	2247	1627	1220	814	-	476
55	12.8	Q(Btu/h)	26220	21660	16245	10830	-	8892	27163	22439	16829	11220	-	9212	28152	23256	17442	11628	-	9547
		W	2491	1804	1353	902	-	528	2304	1668	1251	834	-	488	2168	1570	1177	785	-	459
50	10.0	Q(Btu/h)	24633	20349	15262	10175	-	8354	25553	21109	15832	10555	-	8666	26496	21888	16416	10944	-	8986
		W	2393	1733	1300	867	-	507	2211	1601	1201	800	-	468	2091	1514	1136	757	-	443
47	8.3	Q(Btu/h)	23621	19513	14635	9757	-	8011	24541	20273	15205	10137	-	8323	25461	21033	15775	10517	-	8635
		W	2316	1677	1258	839	-	491	2150	1557	1168	778	-	455	2024	1466	1099	733	-	429
42	5.6	Q(Btu/h)	22034	18202	13652	9101	-	7472	23000	19000	14250	9500	-	7800	23874	19722	14792	9861	-	8096
		W	2170	1571	1179	786	-	460	2030	1470	1103	735	-	430	1892	1370	1028	685	-	401
35	1.7	Q(Btu/h)	16951	14003	10502	7002	-	5749	18147	14991	11243	7496	-	6154	19435	16055	12041	8028	-	6591
		W	1931	1398	1048	699	-	409	1795	1299	975	650	-	380	1669	1208	906	604	-	353
32	0.0	Q(Btu/h)	16192	13376	10032	6688	-	5491	17135	14155	10616	7078	-	5811	17802	14706	11030	7353	-	6037
		W	1829	1324	993	662	-	387	1685	1220	915	610	-	357	1573	1139	854	570	-	333
27	-2.8	Q(Btu/h)	15433	12749	9562	6375	-	5234	16215	13395	10046	6698	-	5499	16813	13889	10417	6945	-	5702
		W	1681	1217	913	609	-	356	1535	1111	833	556	-	325	1435	1039	779	520	-	304
22	-5.6	Q(Btu/h)	14766	12198	9149	6099	-	5008	15548	12844	9633	6422	-	5273	16146	13338	10004	6669	-	5476
		W	1559	1129	847	564	-	330	1445	1047	785	523	-	306	1326	960	720	480	-	281
17	-8.3	Q(Btu/h)	14260	11780	8835	5890	-	4836	15019	12407	9305	6204	-	5093	15548	12844	9633	6422	-	5273
		W	1466	1061	796	531	-	310	1368	991	743	495	-	290	1244	901	676	451	-	264
12	-11.1	Q(Btu/h)	13731	11343	8507	5672	-	4657	14490	11970	8978	5985	-	4914	15065	12445	9334	6223	-	5109
		W	1368	991	743	495	-	290	1295	938	703	469	-	274	1192	863	647	431	-	252
5	-15.0	Q(Btu/h)	12995	10735	8051	5368	-	4407	13547	11191	8393	5596	-	4594	13892	11476	8607	5738	-	4711
		W	1246	903	677	451	-	264	1196	866	649	433	-	253	1104	800	600	400	-	234
2	-16.7	Q(Btu/h)	12397	10241	7681	5121	-	4204	12788	10564	7923	5282	-	4337	13064	10792	8094	5396	-	4430
		W	1196	866	649	433	-	253	1153	835	626	417	-	244	1070	775	581	387	-	227
-3	-19.4	Q(Btu/h)	11201	9253	6940	4627	-	3799	11569	9557	7168	4779	-	3923	11753	9709	7282	4855	-	3986
		W	1121	811	609	406	-	237	1082	784	588	392	-	229	1017	736	552	368	-	215
-8	-22.2	Q(Btu/h)	9982	8246	6185	4123	-	3385	10304	8512	6384	4256	-	3494	10419	8607	6455	4304	-	3533
		W	1047	759	569	379	-	222	1011	732	549	366	-	214	964	698	524	349	-	204
-13	-25.0	Q(Btu/h)	8763	7239	5429	3620	-	2972	9039	7467	5600	3734	-	3065	9062	7486	5615	3743	-	3073
		W	978	709	531	354	-	207	938	679	509	340	-	199	916	663	497	331	-	194

PKA-A18LA1
PUZ-A18NKA8
1) COOLING

Rated
Q(Btu/h): 18000
W: 1680

Indoor W.B.			72°F / 22.2°C						67°F / 19.4°C						64°F / 17.8°C						61°F / 16.1°C					
Outdoor D.B.			Max	Rated	75%	50%	25%	Min	Max	Rated	75%	50%	25%	Min	Max	Rated	75%	50%	25%	Min	Max	Rated	75%	50%	25%	Min
(°F)	(°C)																									
115	46.1	Q(Btu/h)	17388	17388	13041	8694	-	5410	16434	16434	12326	8217	-	5113	15498	15498	11624	7749	-	4822	14544	14544	10908	7272	-	4525
		W	2023	2023	1517	1011	-	409	1982	1982	1487	991	-	401	1945	1945	1459	973	-	394	1912	1912	1434	956	-	387
110	43.3	Q(Btu/h)	17856	17856	13392	8928	-	5555	16848	16848	12636	8424	-	5242	15822	15822	11867	7911	-	4922	14922	14922	11192	7461	-	4642
		W	1932	1932	1449	966	-	391	1897	1897	1423	948	-	384	1863	1863	1397	932	-	377	1830	1830	1372	915	-	370
106	41.1	Q(Btu/h)	18252	18252	13689	9126	-	5678	17226	17226	12920	8613	-	5359	16182	16182	12137	8091	-	5034	15228	15228	11421	7614	-	4738
		W	1880	1880	1410	940	-	380	1830	1830	1372	915	-	370	1796	1796	1347	898	-	363	1764	1764	1323	882	-	357
102	38.9	Q(Btu/h)	18558	18558	13919	9279	-	5774	17550	17550	13163	8775	-	5460	16452	16452	12339	8226	-	5118	15444	15444	11583	7722	-	4805
		W	1821	1821	1366	911	-	369	1788	1788	1341	894	-	362	1747	1747	1310	874	-	354	1714	1714	1285	857	-	347
98	36.7	Q(Btu/h)	18828	18828	14121	9414	-	5858	17766	17766	13325	8883	-	5527	16722	16722	12542	8361	-	5202	15678	15678	11759	7839	-	4878
		W	1764	1764	1323	882	-	357	1730	1730	1298	865	-	350	1697	1697	1273	848	-	343	1663	1663	1247	832	-	337
94	34.4	Q(Btu/h)	19080	19080	14310	9540	-	5936	18000	18000	13500	9000	-	5600	16938	16938	12704	8469	-	5270	15894	15894	11921	7947	-	4945
		W	1714	1714	1285	857	-	347	1680	1680	1260	840	-	340	1650	1650	1237	825	-	334	1609	1609	1207	805	-	326
90	32.2	Q(Btu/h)	19350	19350	14513	9675	-	6020	18216	18216	13662	9108	-	5667	17154	17154	12866	8577	-	5337	16110	16110	12083	8055	-	5012
		W	1663	1663	1247	832	-	337	1630	1630	1222	815	-	330	1596	1596	1197	798	-	323	1564	1564	1173	782	-	317
86	30.0	Q(Btu/h)	19602	19602	14702	9801	-	6098	18486	18486	13865	9243	-	5751	17388	17388	13041	8694	-	5410	16326	16326	12245	8163	-	5079
		W	1618	1618	1213	809	-	327	1588	1588	1191	794	-	321	1556	1556	1167	778	-	315	1522	1522	1142	761	-	308
82	27.8	Q(Btu/h)	19782	19782	14837	9891	-	6154	18648	18648	13986	9324	-	5802	17514	17514	13136	8757	-	5449	16452	16452	12339	8226	-	5118
		W	1589	1589	1192	795	-	322	1556	1556	1167	778	-	315	1514	1514	1135	757	-	306	1488	1488	1116	744	-	301
78	25.6	Q(Btu/h)	19962	19962	14972	9981	-	6210	18828	18828	14121	9414	-	5858	17712	17712	13284	8856	-	5510	16596	16596	12447	8298	-	5163
		W	1551	1551	1163	775	-	314	1520	1520	1140	760	-	308	1487	1487	1115	743	-	301	1450	1450	1087	725	-	293
74	23.3	Q(Btu/h)	20052	20052	15039	10026	-	6238	18918	18918	14189	9459	-	5886	17856	17856	13392	8928	-	5555	16722	16722	12542	8361	-	5202
		W	1522	1522	1142	761	-	308	1488	1488	1116	744	-	301	1455	1455	1091	727	-	294	1423	1423	1067	711	-	288
70	21.1	Q(Btu/h)	20142	20142	15107	10071	-	6266	18990	18990	14243	9495	-	5908	17946	17946	13460	8973	-	5583	16812	16812	12609	8406	-	5230
		W	1497	1497	1123	748	-	303	1463	1463	1097	732	-	296	1430	1430	1072	715	-	289	1398	1398	1048	699	-	283
66	18.9	Q(Btu/h)	20268	20268	15201	10134	-	6306	19170	19170	14378	9585	-	5964	18036	18036	13527	9018	-	5611	16992	16992	12744	8496	-	5286
		W	1472	1472	1104	736	-	298	1438	1438	1079	719	-	291	1406	1406	1055	703	-	285	1373	1373	1029	686	-	278
62	16.7	Q(Btu/h)	20304	20304	15228	10152	-	6317	19224	19224	14418	9612	-	5981	18126	18126	13595	9063	-	5639	17064	17064	12798	8532	-	5309
		W	1455	1455	1091	727	-	294	1430	1430	1072	715	-	289	1389	1389	1042	695	-	281	1356	1356	1017	678	-	274
58	14.4	Q(Btu/h)	20376	20376	15282	10188	-	6339	19260	19260	14445	9630	-	5992	18108	18108	13581	9054	-	5634	17046	17046	12785	8523	-	5303
		W	1436	1436	1077	718	-	291	1401	1401	1051	701	-	284	1368	1368	1026	684	-	277	1331	1331	998	665	-	269
54	12.2	Q(Btu/h)	20448	20448	15336	10224	-	6362	19350	19350	14513	9675	-	6020	18216	18216	13662	9108	-	5667	17154	17154	12866	8577	-	5337
		W	1430	1430	1072	715	-	289	1398	1398	1048	699	-	283	1361	1361	1021	680	-	275	1322	1322	992	661	-	268
50	10.0	Q(Btu/h)	20484	20484	15363	10242	-	6373	19386	19386	14540	9693	-	6031	18306	18306	13730	9153	-	5695	17226	17226	12920	8613	-	5359
		W	1411	1411	1058	706	-	286	1376	1376	1032	688	-	278	1339	1339	1004	669	-	271	1302	1302	977	651	-	264
46	7.8	Q(Btu/h)	20520	20520	15390	10260	-	6384	19440	19440	14580	9720	-	6048	18342	18342	13757	9171	-	5706	17298	17298	12974	8649	-	5382
		W	1401	1401	1051	701	-	284	1368	1368	1026	684	-	277	1331	1331	998	665	-	269	1294	1294	970	647	-	262
42	5.6	Q(Btu/h)	20538	20538	15404	10269	-	6390	19440	19440	14580	9720	-	6048	18378	18378	13784	9189	-	5718	17316	17316	12987	8658	-	5387
		W	1398	1398	1048	699	-	283	1362	1362	1022	681	-	276	1322	1322	992	661	-	268	1284	1284	963	642	-	260
38	3.3	Q(Btu/h)	20538	20538	15404	10269	-	6390	19476	19476	14607	9738	-	6059	18414	18414	13811	9207	-	5729	17370	17370	13028	8685	-	5404
		W	1389	1389	1042	695	-	281	1352	1352	1014	676	-	274	1314	1314	985	657	-	266	1273	1273	955	637	-	258
34	1.1	Q(Btu/h)	20556	20556	15417	10278	-	6395	19494	19494	14621	9747	-	6065	18450	18450	13838	9225	-	5740	17406	17406	13055	8703	-	5415
		W	1384	1384	1038	692	-	280	1349	1349	1012	675	-	273	1310	1310	983	655	-	265	1272	1272	954	636	-	257
30	-1.1	Q(Btu/h)	20556	20556	15417	10278	-	6395	19494	19494	14621	9747	-	6065	18468	18468	13851	9234	-	5746	17424	17424	13068	8712	-	5421
		W	1384	1384	1038	692	-	280	1344	1344	1008	672	-	272	1307	1307	980	654	-	265	1267	1267	950	633	-	256
26	-3.3	Q(Btu/h)	20574	20574	15431	10287	-	6401	19530	19530	14648	9765	-	6076	18504	18504	13878	9252	-	5757	17478	17478	13109	8739	-	5438
		W	1381	1381	1036	690	-	279	1341	1341	1005	670	-	271	1304	1304	978	652	-	264	1263	1263	948	632	-	256
23	-5.0	Q(Btu/h)	20574	20574	15431	10287	-	6401	19548	19548	14661	9774	-	6082	18522	18522	13892	9261	-	5762	17514	17514	13136	8757	-	5449
		W	1378	1378	1033	689	-	279	1341	1341	1005	670	-	271	1302	1302	977	651	-	264	1263	1263	948	632	-	256
18	-7.8	Q(Btu/h)	20628	20628	15471	10314	-	6418	19602	19602	14702	9801	-	6098	18522	18522	13892	9261	-	5762	17604	17604	13203	8802	-	5477
		W	1373	1373	1029	686	-	278	1339	1339	1004	669	-	271	1300	1300	975	650	-	263	1263	1263	948	632	-	256
14	-10.0	Q(Btu/h)	20628	20628	15471	10314	-	6418	19602	19602	14702	9801	-	6098	18594	18594	13946	9297	-	5785	17622	17622	13217	8811	-	5482
		W	1376	1376	1032	688	-	278	1339	1339	1004	669	-	271	1304	1304	978	652	-	264	1265	1265	949	633	-	256
10	-12.2	Q(Btu/h)	20664	20664	15498	10332	-	6429	19602	19602	14702	9801	-	6098	18648	18648	13986	9324	-	5802	17676	17676	13257	8838	-	5499
		W	1374	1374	1031	687	-	278	1339	1339	1004	669	-	271	1305	1305	979	653	-	264	1267	1267	950	633	-	256
6	-14.4	Q(Btu/h)	20682	20682	15512	10341	-	6434	19674	19674	14756	9837	-	6121	18684	18684	14013	9342	-	5813	17694	17694	13271	8847	-	5505
		W	1374	1374	1031	687	-	278	1341	1341	1005	670	-	271	1307	1307	980	654	-	265	1272	1272	954	636	-	257
2	-16.7	Q(Btu/h)	20736	20736	15552	10368	-	6451	19746	19746	14810	9873	-	6143	18738	18738	14054	9369	-	5830	17820	17820	13365	8910	-	5544
		W	1373	1373	1029	686	-	278	1341	1341	1005	670	-	271	1307	1307	980	654	-	265	1273	1273	955	637	-	258
0	-17.8	Q(Btu/h)	20772	20772	15579	10386	-	6462	19782	19782	14837	9891	-	6154	18792	18792	14094	9396	-	5846	17820	17820	13365	8910	-	5544
		W	1373	1373	1029	686	-	278	1342	1342	1007	671	-	272	1310	1310	983	655	-	265	1277	1277	958	638	-	258

PKA-A18LA1
PUZ-A18NKA8
2) HEATING

Rated
Q(Btu/h): 19000
W: 1640

Indoor D.B.			80°F / 26.7°C						70°F / 21.1°C						60°F / 15.6°C					
Outdoor W.B.			Max	Rated	75%	50%	25%	Min	Max	Rated	75%	50%	25%	Min	Max	Rated	75%	50%	25%	Min
(°F)	(°C)																			
70	21.1	Q(Btu/h)	29634	25593	19195	12797	-	7274	30536	26372	19779	13186	-	7495	31680	27360	20520	13680	-	7776
		W	2943	2245	1684	1123	-	424	2741	2091	1568	1046	-	395	2554	1948	1461	974	-	368
65	18.3	Q(Btu/h)	28094	24263	18197	12132	-	6896	28996	25042	18782	12521	-	7117	30074	25973	19480	12987	-	7382
		W	2844	2170	1627	1085	-	410	2640	2014	1510	1007	-	381	2466	1881	1411	941	-	356
60	15.6	Q(Btu/h)	26620	22990	17243	11495	-	6534	27522	23769	17827	11885	-	6755	28534	24643	18482	12322	-	7004
		W	2718	2073	1555	1036	-	392	2543	1940	1455	970	-	367	2380	1815	1362	908	-	343
55	12.8	Q(Btu/h)	25080	21660	16245	10830	-	6156	25982	22439	16829	11220	-	6377	26928	23256	17442	11628	-	6610
		W	2638	2012	1509	1006	-	380	2440	1861	1396	931	-	352	2296	1752	1314	876	-	331
50	10.0	Q(Btu/h)	23562	20349	15262	10175	-	5783	24442	21109	15832	10555	-	5999	25344	21888	16416	10944	-	6221
		W	2535	1934	1450	967	-	365	2341	1786	1339	893	-	338	2215	1689	1267	845	-	319
47	8.3	Q(Btu/h)	22594	19513	14635	9757	-	5546	23474	20273	15205	10137	-	5762	24354	21033	15775	10517	-	5978
		W	2453	1871	1403	936	-	354	2277	1737	1303	868	-	328	2144	1635	1226	818	-	309
42	5.6	Q(Btu/h)	21076	18202	13652	9101	-	5173	22000	19000	14250	9500	-	5400	22836	19722	14792	9861	-	5605
		W	2298	1753	1315	877	-	331	2150	1640	1230	820	-	310	2004	1528	1146	764	-	289
35	1.7	Q(Btu/h)	16214	14003	10502	7002	-	3980	17358	14991	11243	7496	-	4261	18590	16055	12041	8028	-	4563
		W	2045	1560	1170	780	-	295	1901	1450	1087	725	-	274	1767	1348	1011	674	-	255
32	0.0	Q(Btu/h)	15488	13376	10032	6688	-	3802	16390	14155	10616	7078	-	4023	17028	14706	11030	7353	-	4180
		W	1937	1478	1108	739	-	279	1785	1361	1021	681	-	257	1666	1271	953	636	-	240
27	-2.8	Q(Btu/h)	14762	12749	9562	6375	-	3623	15510	13395	10046	6698	-	3807	16082	13889	10417	6945	-	3947
		W	1780	1358	1018	679	-	257	1625	1240	930	620	-	234	1520	1159	870	580	-	219
22	-5.6	Q(Btu/h)	14124	12198	9149	6099	-	3467	14872	12844	9633	6422	-	3650	15444	13338	10004	6669	-	3791
		W	1651	1260	945	630	-	238	1531	1168	876	584	-	221	1404	1071	803	535	-	202
17	-8.3	Q(Btu/h)	13640	11780	8835	5890	-	3348	14366	12407	9305	6204	-	3526	14872	12844	9633	6422	-	3650
		W	1552	1184	888	592	-	224	1449	1105	829	553	-	209	1318	1005	754	503	-	190
12	-11.1	Q(Btu/h)	13134	11343	8507	5672	-	3224	13860	11970	8978	5985	-	3402	14410	12445	9334	6223	-	3537
		W	1449	1105	829	553	-	209	1372	1046	785	523	-	198	1262	963	722	481	-	182
5	-15.0	Q(Btu/h)	12430	10735	8051	5368	-	3051	12958	11191	8393	5596	-	3181	13288	11476	8607	5738	-	3262
		W	1320	1007	755	503	-	190	1266	966	724	483	-	183	1170	892	669	446	-	169
2	-16.7	Q(Btu/h)	11858	10241	7681	5121	-	2911	12232	10564	7923	5282	-	3002	12496	10792	8094	5396	-	3067
		W	1266	966	724	483	-	183	1221	932	699	466	-	176	1133	864	648	432	-	163
-3	-19.4	Q(Btu/h)	10714	9253	6940	4627	-	2630	11066	9557	7168	4779	-	2716	11242	9709	7282	4855	-	2759
		W	1187	905	679	453	-	171	1146	874	656	437	-	165	1077	822	616	411	-	155
-8	-22.2	Q(Btu/h)	9548	8246	6185	4123	-	2344	9856	8512	6384	4256	-	2419	9966	8607	6455	4304	-	2446
		W	1109	846	635	423	-	160	1071	817	613	408	-	154	1021	779	584	390	-	147
-13	-25.0	Q(Btu/h)	8382	7239	5429	3620	-	2057	8646	7467	5600	3734	-	2122	8668	7486	5615	3743	-	2128
		W	1036	790	593	395	-	149	993	758	568	379	-	143	970	740	555	370	-	140

PEAD-A18AA8
PUZ-A18NKA8
1) COOLING

Rated
Q(Btu/h): 18000
W: 1670

Indoor W.B.			72°F / 22.2°C						67°F / 19.4°C						64°F / 17.8°C						61°F / 16.1°C					
Outdoor D.B.			Max	Rated	75%	50%	25%	Min	Max	Rated	75%	50%	25%	Min	Max	Rated	75%	50%	25%	Min	Max	Rated	75%	50%	25%	Min
(°F)	(°C)																									
115	46.1	Q(Btu/h)	17388	17388	13041	8694	-	7438	16434	16434	12326	8217	-	7030	15498	15498	11624	7749	-	6630	14544	14544	10908	7272	-	6222
		W	2011	2011	1508	1005	-	626	1971	1971	1478	985	-	614	1934	1934	1450	967	-	602	1900	1900	1425	950	-	592
110	43.3	Q(Btu/h)	17856	17856	13392	8928	-	7638	16848	16848	12636	8424	-	7207	15822	15822	11867	7911	-	6768	14922	14922	11192	7461	-	6383
		W	1921	1921	1440	960	-	598	1885	1885	1414	943	-	587	1852	1852	1389	926	-	577	1819	1819	1364	909	-	566
106	41.1	Q(Btu/h)	18252	18252	13689	9126	-	7808	17226	17226	12920	8613	-	7369	16182	16182	12137	8091	-	6922	15228	15228	11421	7614	-	6514
		W	1869	1869	1402	934	-	582	1819	1819	1364	909	-	566	1785	1785	1339	893	-	556	1754	1754	1315	877	-	546
102	38.9	Q(Btu/h)	18558	18558	13919	9279	-	7939	17550	17550	13163	8775	-	7508	16452	16452	12339	8226	-	7038	15444	15444	11583	7722	-	6607
		W	1810	1810	1358	905	-	564	1777	1777	1333	888	-	553	1737	1737	1303	868	-	541	1703	1703	1278	852	-	530
98	36.7	Q(Btu/h)	18828	18828	14121	9414	-	8054	17766	17766	13325	8883	-	7600	16722	16722	12542	8361	-	7153	15678	15678	11759	7839	-	6707
		W	1754	1754	1315	877	-	546	1720	1720	1290	860	-	536	1687	1687	1265	843	-	525	1653	1653	1240	827	-	515
94	34.4	Q(Btu/h)	19080	19080	14310	9540	-	8162	18000	18000	13500	9000	-	7700	16938	16938	12704	8469	-	7246	15894	15894	11921	7947	-	6799
		W	1703	1703	1278	852	-	530	1670	1670	1253	835	-	520	1640	1640	1230	820	-	511	1600	1600	1200	800	-	498
90	32.2	Q(Btu/h)	19350	19350	14513	9675	-	8278	18216	18216	13662	9108	-	7792	17154	17154	12866	8577	-	7338	16110	16110	12083	8055	-	6892
		W	1653	1653	1240	827	-	515	1620	1620	1215	810	-	504	1587	1587	1190	793	-	494	1555	1555	1166	777	-	484
86	30.0	Q(Btu/h)	19602	19602	14702	9801	-	8385	18486	18486	13865	9243	-	7908	17388	17388	13041	8694	-	7438	16326	16326	12245	8163	-	6984
		W	1608	1608	1206	804	-	501	1578	1578	1184	789	-	491	1546	1546	1160	773	-	482	1513	1513	1135	757	-	471
82	27.8	Q(Btu/h)	19782	19782	14837	9891	-	8462	18648	18648	13986	9324	-	7977	17514	17514	13136	8757	-	7492	16452	16452	12339	8226	-	7038
		W	1580	1580	1185	790	-	492	1546	1546	1160	773	-	482	1505	1505	1129	752	-	469	1480	1480	1110	740	-	461
78	25.6	Q(Btu/h)	19962	19962	14972	9981	-	8539	18828	18828	14121	9414	-	8054	17712	17712	13284	8856	-	7577	16596	16596	12447	8298	-	7099
		W	1541	1541	1156	771	-	480	1511	1511	1134	756	-	471	1478	1478	1108	739	-	460	1441	1441	1081	721	-	449
74	23.3	Q(Btu/h)	20052	20052	15039	10026	-	8578	18918	18918	14189	9459	-	8093	17856	17856	13392	8928	-	7638	16722	16722	12542	8361	-	7153
		W	1513	1513	1135	757	-	471	1480	1480	1110	740	-	461	1446	1446	1085	723	-	450	1414	1414	1061	707	-	440
70	21.1	Q(Btu/h)	20142	20142	15107	10071	-	8616	18990	18990	14243	9495	-	8124	17946	17946	13460	8973	-	7677	16812	16812	12609	8406	-	7192
		W	1488	1488	1116	744	-	463	1455	1455	1091	727	-	453	1421	1421	1066	711	-	443	1389	1389	1042	695	-	433
66	18.9	Q(Btu/h)	20268	20268	15201	10134	-	8670	19170	19170	14378	9585	-	8201	18036	18036	13527	9018	-	7715	16992	16992	12744	8496	-	7269
		W	1463	1463	1097	731	-	456	1430	1430	1072	715	-	445	1398	1398	1048	699	-	435	1364	1364	1023	682	-	425
62	16.7	Q(Btu/h)	20304	20304	15228	10152	-	8686	19224	19224	14418	9612	-	8224	18126	18126	13595	9063	-	7754	17064	17064	12798	8532	-	7300
		W	1446	1446	1085	723	-	450	1421	1421	1066	711	-	443	1381	1381	1036	691	-	430	1348	1348	1011	674	-	420
58	14.4	Q(Btu/h)	20376	20376	15282	10188	-	8716	19260	19260	14445	9630	-	8239	18108	18108	13581	9054	-	7746	17046	17046	12785	8523	-	7292
		W	1428	1428	1071	714	-	445	1393	1393	1045	696	-	434	1359	1359	1020	680	-	423	1323	1323	992	661	-	412
54	12.2	Q(Btu/h)	20448	20448	15336	10224	-	8747	19350	19350	14513	9675	-	8278	18216	18216	13662	9108	-	7792	17154	17154	12866	8577	-	7338
		W	1421	1421	1066	711	-	443	1389	1389	1042	695	-	433	1353	1353	1015	676	-	421	1314	1314	986	657	-	409
50	10.0	Q(Btu/h)	20484	20484	15363	10242	-	8763	19386	19386	14540	9693	-	8293	18306	18306	13730	9153	-	7831	17226	17226	12920	8613	-	7369
		W	1403	1403	1052	701	-	437	1368	1368	1026	684	-	426	1331	1331	998	665	-	414	1294	1294	971	647	-	403
46	7.8	Q(Btu/h)	20520	20520	15390	10260	-	8778	19440	19440	14580	9720	-	8316	18342	18342	13757	9171	-	7846	17298	17298	12974	8649	-	7400
		W	1393	1393	1045	696	-	434	1359	1359	1020	680	-	423	1323	1323	992	661	-	412	1286	1286	964	643	-	400
42	5.6	Q(Btu/h)	20538	20538	15404	10269	-	8786	19440	19440	14580	9720	-	8316	18378	18378	13784	9189	-	7862	17316	17316	12987	8658	-	7407
		W	1389	1389	1042	695	-	433	1354	1354	1016	677	-	422	1314	1314	986	657	-	409	1276	1276	957	638	-	397
38	3.3	Q(Btu/h)	20538	20538	15404	10269	-	8786	19476	19476	14607	9738	-	8331	18414	18414	13811	9207	-	7877	17370	17370	13028	8685	-	7431
		W	1381	1381	1036	691	-	430	1344	1344	1008	672	-	419	1306	1306	979	653	-	407	1266	1266	949	633	-	394
34	1.1	Q(Btu/h)	20556	20556	15417	10278	-	8793	19494	19494	14621	9747	-	8339	18450	18450	13838	9225	-	7893	17406	17406	13055	8703	-	7446
		W	1376	1376	1032	688	-	428	1341	1341	1006	671	-	418	1303	1303	977	651	-	406	1264	1264	948	632	-	394
30	-1.1	Q(Btu/h)	20556	20556	15417	10278	-	8793	19494	19494	14621	9747	-	8339	18468	18468	13851	9234	-	7900	17424	17424	13068	8712	-	7454
		W	1376	1376	1032	688	-	428	1336	1336	1002	668	-	416	1299	1299	974	650	-	405	1259	1259	944	630	-	392
26	-3.3	Q(Btu/h)	20574	20574	15431	10287	-	8801	19530	19530	14648	9765	-	8355	18504	18504	13878	9252	-	7916	17478	17478	13109	8739	-	7477
		W	1373	1373	1030	686	-	427	1333	1333	999	666	-	415	1296	1296	972	648	-	404	1256	1256	942	628	-	391
23	-5.0	Q(Btu/h)	20574	20574	15431	10287	-	8801	19548	19548	14661	9774	-	8362	18522	18522	13892	9261	-	7923	17514	17514	13136	8757	-	7492
		W	1369	1369	1027	685	-	426	1333	1333	999	666	-	415	1294	1294	971	647	-	403	1256	1256	942	628	-	391
18	-7.8	Q(Btu/h)	20628	20628	15471	10314	-	8824	19602	19602	14702	9801	-	8385	18522	18522	13892	9261	-	7923	17604	17604	13203	8802	-	7531
		W	1364	1364	1023	682	-	425	1331	1331	998	665	-	414	1293	1293	969	646	-	402	1256	1256	942	628	-	391
14	-10.0	Q(Btu/h)	20628	20628	15471	10314	-	8824	19602	19602	14702	9801	-	8385	18594	18594	13946	9297	-	7954	17622	17622	13217	8811	-	7538
		W	1368	1368	1026	684	-	426	1331	1331	998	665	-	414	1296	1296	972	648	-	404	1258	1258	943	629	-	392
10	-12.2	Q(Btu/h)	20664	20664	15498	10332	-	8840	19602	19602	14702	9801	-	8385	18648	18648	13986	9324	-	7977	17676	17676	13257	8838	-	7561
		W	1366	1366	1025	683	-	425	1331	1331	998	665	-	414	1298	1298	973	649	-	404	1259	1259	944	630	-	392
6	-14.4	Q(Btu/h)	20682	20682	15512	10341	-	8847	19674	19674	14756	9837	-	8416	18684	18684	14013	9342	-	7993	17694	17694	13271	8847	-	7569
		W	1366	1366	1025	683	-	425	1333	1333	999	666	-	415	1299	1299	974	650	-	405	1264	1264	948	632	-	394
2	-16.7	Q(Btu/h)	20736	20736	15552	10368	-	8870	19746	19746	14810	9873	-	8447	18738	18738	14054	9369	-	8016	17820	17820	13365	8910	-	7623
		W	1364	1364	1023	682	-	425	1333	1333	999	666	-	415	1299	1299	974	650	-	405	1266	1266	949	633	-	394
0	-17.8	Q(Btu/h)	20772	20772	15579	10386	-	8886	19782	19782	14837	9891	-	8462	18792	18792	14094	9396	-	8039	17820	17820	13365	8910	-	7623
		W	1364	1364	1023	682	-	425	1334	1334	1001	667	-	415	1303	1303	977	651	-	406	1269	1269	952	635	-	395

PEAD-A18AA8
PUZ-A18NKA8
2) HEATING

Rated
Q(Btu/h): 19000
W: 1460

Indoor D.B.			80°F / 26.7°C						70°F / 21.1°C						60°F / 15.6°C					
Outdoor W.B.			Max	Rated	75%	50%	25%	Min	Max	Rated	75%	50%	25%	Min	Max	Rated	75%	50%	25%	Min
(°F)	(°C)																			
70	21.1	Q(Btu/h)	29634	25593	19195	12797	-	10237	30536	26372	19779	13186	-	10549	31680	27360	20520	13680	-	10944
		W	2492	1999	1499	999	-	561	2321	1862	1396	931	-	523	2162	1734	1301	867	-	487
65	18.3	Q(Btu/h)	28094	24263	18197	12132	-	9705	28996	25042	18782	12521	-	10017	30074	25973	19480	12987	-	10389
		W	2408	1932	1449	966	-	542	2235	1793	1345	896	-	503	2088	1675	1256	837	-	470
60	15.6	Q(Btu/h)	26620	22990	17243	11495	-	9196	27522	23769	17827	11885	-	9508	28534	24643	18482	12322	-	9857
		W	2300	1845	1384	923	-	518	2153	1727	1295	864	-	485	2015	1616	1212	808	-	454
55	12.8	Q(Btu/h)	25080	21660	16245	10830	-	8664	25982	22439	16829	11220	-	8976	26928	23256	17442	11628	-	9302
		W	2233	1791	1344	896	-	503	2066	1657	1243	829	-	465	1944	1559	1169	780	-	438
50	10.0	Q(Btu/h)	23562	20349	15262	10175	-	8140	24442	21109	15832	10555	-	8444	25344	21888	16416	10944	-	8755
		W	2146	1721	1291	861	-	483	1982	1590	1192	795	-	446	1875	1504	1128	752	-	422
47	8.3	Q(Btu/h)	22594	19513	14635	9757	-	7805	23474	20273	15205	10137	-	8109	24354	21033	15775	10517	-	8413
		W	2077	1666	1249	833	-	468	1927	1546	1160	773	-	434	1815	1456	1092	728	-	409
42	5.6	Q(Btu/h)	21076	18202	13652	9101	-	7281	22000	19000	14250	9500	-	7600	22836	19722	14792	9861	-	7889
		W	1946	1561	1171	780	-	438	1820	1460	1095	730	-	410	1696	1361	1021	680	-	382
35	1.7	Q(Btu/h)	16214	14003	10502	7002	-	5601	17358	14991	11243	7496	-	5996	18590	16055	12041	8028	-	6422
		W	1731	1388	1041	694	-	390	1609	1291	968	645	-	362	1496	1200	900	600	-	337
32	0.0	Q(Btu/h)	15488	13376	10032	6688	-	5350	16390	14155	10616	7078	-	5662	17028	14706	11030	7353	-	5882
		W	1640	1315	987	658	-	369	1511	1212	909	606	-	340	1411	1132	849	566	-	318
27	-2.8	Q(Btu/h)	14762	12749	9562	6375	-	5100	15510	13395	10046	6698	-	5358	16082	13889	10417	6945	-	5556
		W	1507	1209	907	604	-	339	1376	1104	828	552	-	310	1287	1032	774	516	-	290
22	-5.6	Q(Btu/h)	14124	12198	9149	6099	-	4879	14872	12844	9633	6422	-	5138	15444	13338	10004	6669	-	5335
		W	1398	1121	841	561	-	315	1296	1040	780	520	-	292	1188	953	715	477	-	268
17	-8.3	Q(Btu/h)	13640	11780	8835	5890	-	4712	14366	12407	9305	6204	-	4963	14872	12844	9633	6422	-	5138
		W	1314	1054	791	527	-	296	1227	984	738	492	-	276	1116	895	671	447	-	251
12	-11.1	Q(Btu/h)	13134	11343	8507	5672	-	4537	13860	11970	8978	5985	-	4788	14410	12445	9334	6223	-	4978
		W	1227	984	738	492	-	276	1161	931	699	466	-	262	1068	857	643	429	-	241
5	-15.0	Q(Btu/h)	12430	10735	8051	5368	-	4294	12958	11191	8393	5596	-	4476	13288	11476	8607	5738	-	4590
		W	1117	896	672	448	-	252	1072	860	645	430	-	241	990	794	596	397	-	223
2	-16.7	Q(Btu/h)	11858	10241	7681	5121	-	4096	12232	10564	7923	5282	-	4226	12496	10792	8094	5396	-	4317
		W	1072	860	645	430	-	241	1034	829	622	415	-	233	959	769	577	385	-	216
-3	-19.4	Q(Btu/h)	10714	9253	6940	4627	-	3701	11066	9557	7168	4779	-	3823	11242	9709	7282	4855	-	3884
		W	1005	806	604	403	-	226	970	778	584	389	-	219	912	731	549	366	-	205
-8	-22.2	Q(Btu/h)	9548	8246	6185	4123	-	3298	9856	8512	6384	4256	-	3405	9966	8607	6455	4304	-	3443
		W	939	753	565	377	-	212	906	727	545	364	-	204	865	694	520	347	-	195
-13	-25.0	Q(Btu/h)	8382	7239	5429	3620	-	2896	8646	7467	5600	3734	-	2987	8668	7486	5615	3743	-	2994
		W	877	704	528	352	-	198	841	675	506	337	-	189	821	658	494	329	-	185

PLA-A24EA8
PUZ-A24NHA8
1) COOLING

Rated
Q(Btu/h): 24000
W: 1670

Indoor W.B.			72°F / 22.2°C						67°F / 19.4°C						64°F / 17.8°C						61°F / 16.1°C					
Outdoor D.B.			Max	Rated	75%	50%	25%	Min	Max	Rated	75%	50%	25%	Min	Max	Rated	75%	50%	25%	Min	Max	Rated	75%	50%	25%	Min
(°F)	(°C)																									
115	46.1	Q(Btu/h)	23184	23184	17388	11592	-	9660	21912	21912	16434	10956	-	9130	20664	20664	15498	10332	-	8610	19392	19392	14544	9696	-	8080
		W	2011	2011	1508	1005	-	578	1971	1971	1478	985	-	566	1934	1934	1450	967	-	556	1900	1900	1425	950	-	546
110	43.3	Q(Btu/h)	23808	23808	17856	11904	-	9920	22464	22464	16848	11232	-	9360	21096	21096	15822	10548	-	8790	19896	19896	14922	9948	-	8290
		W	1921	1921	1440	960	-	552	1885	1885	1414	943	-	542	1852	1852	1389	926	-	532	1819	1819	1364	909	-	523
106	41.1	Q(Btu/h)	24336	24336	18252	12168	-	10140	22968	22968	17226	11484	-	9570	21576	21576	16182	10788	-	8990	20304	20304	15228	10152	-	8460
		W	1869	1869	1402	934	-	537	1819	1819	1364	909	-	523	1785	1785	1339	893	-	513	1754	1754	1315	877	-	504
102	38.9	Q(Btu/h)	24744	24744	18558	12372	-	10310	23400	23400	17550	11700	-	9750	21936	21936	16452	10968	-	9140	20592	20592	15444	10296	-	8580
		W	1810	1810	1358	905	-	520	1777	1777	1333	888	-	511	1737	1737	1303	868	-	499	1703	1703	1278	852	-	490
98	36.7	Q(Btu/h)	25104	25104	18828	12552	-	10460	23688	23688	17766	11844	-	9870	22296	22296	16722	11148	-	9290	20904	20904	15678	10452	-	8710
		W	1754	1754	1315	877	-	504	1720	1720	1290	860	-	494	1687	1687	1265	843	-	485	1653	1653	1240	827	-	475
94	34.4	Q(Btu/h)	25440	25440	19080	12720	-	10600	24000	24000	18000	12000	-	10000	22584	22584	16938	11292	-	9410	21192	21192	15894	10596	-	8830
		W	1703	1703	1278	852	-	490	1670	1670	1253	835	-	480	1640	1640	1230	820	-	471	1600	1600	1200	800	-	460
90	32.2	Q(Btu/h)	25800	25800	19350	12900	-	10750	24288	24288	18216	12144	-	10120	22872	22872	17154	11436	-	9530	21480	21480	16110	10740	-	8950
		W	1653	1653	1240	827	-	475	1620	1620	1215	810	-	466	1587	1587	1190	793	-	456	1555	1555	1166	777	-	447
86	30.0	Q(Btu/h)	26136	26136	19602	13068	-	10890	24648	24648	18486	12324	-	10270	23184	23184	17388	11592	-	9660	21768	21768	16326	10884	-	9070
		W	1608	1608	1206	804	-	462	1578	1578	1184	789	-	454	1546	1546	1160	773	-	444	1513	1513	1135	757	-	435
82	27.8	Q(Btu/h)	26376	26376	19782	13188	-	10990	24864	24864	18648	12432	-	10360	23352	23352	17514	11676	-	9730	21936	21936	16452	10968	-	9140
		W	1580	1580	1185	790	-	454	1546	1546	1160	773	-	444	1505	1505	1129	752	-	432	1480	1480	1110	740	-	425
78	25.6	Q(Btu/h)	26616	26616	19962	13308	-	11090	25104	25104	18828	12552	-	10460	23616	23616	17712	11808	-	9840	22128	22128	16596	11064	-	9220
		W	1541	1541	1156	771	-	443	1511	1511	1134	756	-	434	1478	1478	1108	739	-	425	1441	1441	1081	721	-	414
74	23.3	Q(Btu/h)	26736	26736	20052	13368	-	11140	25224	25224	18918	12612	-	10510	23808	23808	17856	11904	-	9920	22296	22296	16722	11148	-	9290
		W	1513	1513	1135	757	-	435	1480	1480	1110	740	-	425	1446	1446	1085	723	-	416	1414	1414	1061	707	-	407
70	21.1	Q(Btu/h)	26856	26856	20142	13428	-	11190	25320	25320	18990	12660	-	10550	23928	23928	17946	11964	-	9970	22416	22416	16812	11208	-	9340
		W	1488	1488	1116	744	-	428	1455	1455	1091	727	-	418	1421	1421	1066	711	-	408	1389	1389	1042	695	-	399
66	18.9	Q(Btu/h)	27024	27024	20268	13512	-	11260	25560	25560	19170	12780	-	10650	24048	24048	18036	12024	-	10020	22656	22656	16992	11328	-	9440
		W	1463	1463	1097	731	-	420	1430	1430	1072	715	-	411	1398	1398	1048	699	-	402	1364	1364	1023	682	-	392
62	16.7	Q(Btu/h)	27072	27072	20304	13536	-	11280	25632	25632	19224	12816	-	10680	24168	24168	18126	12084	-	10070	22752	22752	17064	11376	-	9480
		W	1446	1446	1085	723	-	416	1421	1421	1066	711	-	408	1381	1381	1036	691	-	397	1348	1348	1011	674	-	387
58	14.4	Q(Btu/h)	27168	27168	20376	13584	-	11320	25680	25680	19260	12840	-	10700	24144	24144	18108	12072	-	10060	22728	22728	17046	11364	-	9470
		W	1428	1428	1071	714	-	410	1393	1393	1045	696	-	400	1359	1359	1020	680	-	391	1323	1323	992	661	-	380
54	12.2	Q(Btu/h)	27264	27264	20448	13632	-	11360	25800	25800	19350	12900	-	10750	24288	24288	18216	12144	-	10120	22872	22872	17154	11436	-	9530
		W	1421	1421	1066	711	-	408	1389	1389	1042	695	-	399	1353	1353	1015	676	-	389	1314	1314	986	657	-	378
50	10.0	Q(Btu/h)	27312	27312	20484	13656	-	11380	25848	25848	19386	12924	-	10770	24408	24408	18306	12204	-	10170	22968	22968	17226	11484	-	9570
		W	1403	1403	1052	701	-	403	1368	1368	1026	684	-	393	1331	1331	998	665	-	383	1294	1294	971	647	-	372
46	7.8	Q(Btu/h)	27360	27360	20520	13680	-	11400	25920	25920	19440	12960	-	10800	24456	24456	18342	12228	-	10190	23064	23064	17298	11532	-	9610
		W	1393	1393	1045	696	-	400	1359	1359	1020	680	-	391	1323	1323	992	661	-	380	1286	1286	964	643	-	370
42	5.6	Q(Btu/h)	27384	27384	20538	13692	-	11410	25920	25920	19440	12960	-	10800	24504	24504	18378	12252	-	10210	23088	23088	17316	11544	-	9620
		W	1389	1389	1042	695	-	399	1354	1354	1016	677	-	389	1314	1314	986	657	-	378	1276	1276	957	638	-	367
38	3.3	Q(Btu/h)	27384	27384	20538	13692	-	11410	25968	25968	19476	12984	-	10820	24552	24552	18414	12276	-	10230	23160	23160	17370	11580	-	9650
		W	1381	1381	1036	691	-	397	1344	1344	1008	672	-	386	1306	1306	979	653	-	375	1266	1266	949	633	-	364
34	1.1	Q(Btu/h)	27408	27408	20556	13704	-	11420	25992	25992	19494	12996	-	10830	24600	24600	18450	12300	-	10250	23208	23208	17406	11604	-	9670
		W	1376	1376	1032	688	-	396	1341	1341	1006	671	-	385	1303	1303	977	651	-	374	1264	1264	948	632	-	363
30	-1.1	Q(Btu/h)	27408	27408	20556	13704	-	11420	25992	25992	19494	12996	-	10830	24624	24624	18468	12312	-	10260	23232	23232	17424	11616	-	9680
		W	1376	1376	1032	688	-	396	1336	1336	1002	668	-	384	1299	1299	974	650	-	373	1259	1259	944	630	-	362
26	-3.3	Q(Btu/h)	27432	27432	20574	13716	-	11430	26040	26040	19530	13020	-	10850	24672	24672	18504	12336	-	10280	23304	23304	17478	11652	-	9710
		W	1373	1373	1030	686	-	395	1333	1333	999	666	-	383	1296	1296	972	648	-	372	1256	1256	942	628	-	361
23	-5.0	Q(Btu/h)	27432	27432	20574	13716	-	11430	26064	26064	19548	13032	-	10860	24696	24696	18522	12348	-	10290	23352	23352	17514	11676	-	9730
		W	1369	1369	1027	685	-	394	1333	1333	999	666	-	383	1294	1294	971	647	-	372	1256	1256	942	628	-	361
18	-7.8	Q(Btu/h)	27504	27504	20628	13752	-	11460	26136	26136	19602	13068	-	10890	24696	24696	18522	12348	-	10290	23472	23472	17604	11736	-	9780
		W	1364	1364	1023	682	-	392	1331	1331	998	665	-	383	1293	1293	969	646	-	372	1256	1256	942	628	-	361
14	-10.0	Q(Btu/h)	27504	27504	20628	13752	-	11460	26136	26136	19602	13068	-	10890	24792	24792	18594	12396	-	10330	23496	23496	17622	11748	-	9790
		W	1368	1368	1026	684	-	393	1331	1331	998	665	-	383	1296	1296	972	648	-	372	1258	1258	943	629	-	361
10	-12.2	Q(Btu/h)	27552	27552	20664	13776	-	11480	26136	26136	19602	13068	-	10890	24864	24864	18648	12432	-	10360	23568	23568	17676	11784	-	9820
		W	1366	1366	1025	683	-	393	1331	1331	998	665	-	383	1298	1298	973	649	-	373	1259	1259	944	630	-	362
6	-14.4	Q(Btu/h)	27576	27576	20682	13788	-	11490	26232	26232	19674	13116	-	10930	24912	24912	18684	12456	-	10380	23592	23592	17694	11796	-	9830
		W	1366	1366	1025	683	-	393	1333	1333	999	666	-	383	1299	1299	974	650	-	373	1264	1264	948	632	-	363
2	-16.7	Q(Btu/h)	27648	27648	20736	13824	-	11520	26328	26328	19746	13164	-	10970	24984	24984	18738	12492	-	10410	23760	23760	17820	11880	-	9900
		W	1364	1364	1023	682	-	392	1333	1333	999	666	-	383	1299	1299	974	650	-	373	1266	1266	949	633	-	364
0	-17.8	Q(Btu/h)	27696	27696	20772	13848	-	11540	26376	26376	19782	13188	-	10990	25056	25056	18792	12528	-	10440	23760	23760	17820	11880	-	9900
		W	1364	1364	1023	682	-	392	1334	1334	1001	667	-	384	1303	1303	977	651	-	374	1269	1269	952	635	-	365

PLA-A24EA8
PUZ-A24NHA8
2) HEATING

Rated
Q(Btu/h): 26000
W: 1750

Indoor D.B.			80°F / 26.7°C						70°F / 21.1°C						60°F / 15.6°C					
Outdoor W.B.			Max	Rated	75%	50%	25%	Min	Max	Rated	75%	50%	25%	Min	Max	Rated	75%	50%	25%	Min
(°F)	(°C)																			
70	21.1	Q(Btu/h)	39063	35022	26267	17511	-	12123	40252	36088	27066	18044	-	12492	41760	37440	28080	18720	-	12960
		W	2834	2396	1797	1198	-	643	2639	2231	1673	1116	-	599	2459	2079	1559	1040	-	558
65	18.3	Q(Btu/h)	37033	33202	24902	16601	-	11493	38222	34268	25701	17134	-	11862	39643	35542	26657	17771	-	12303
		W	2739	2315	1736	1158	-	622	2542	2149	1612	1075	-	577	2374	2007	1505	1004	-	539
60	15.6	Q(Btu/h)	35090	31460	23595	15730	-	10890	36279	32526	24395	16263	-	11259	37613	33722	25292	16861	-	11673
		W	2616	2212	1659	1106	-	594	2449	2070	1553	1035	-	556	2291	1937	1453	969	-	520
55	12.8	Q(Btu/h)	33060	29640	22230	14820	-	10260	34249	30706	23030	15353	-	10629	35496	31824	23868	15912	-	11016
		W	2540	2147	1610	1074	-	577	2349	1986	1490	993	-	533	2211	1869	1402	935	-	502
50	10.0	Q(Btu/h)	31059	27846	20885	13923	-	9639	32219	28886	21665	14443	-	9999	33408	29952	22464	14976	-	10368
		W	2441	2063	1547	1032	-	554	2254	1906	1429	953	-	512	2132	1803	1352	901	-	484
47	8.3	Q(Btu/h)	29783	26702	20027	13351	-	9243	30943	27742	20807	13871	-	9603	32103	28782	21587	14391	-	9963
		W	2362	1997	1498	998	-	536	2192	1853	1390	927	-	498	2064	1745	1309	872	-	469
42	5.6	Q(Btu/h)	27782	24908	18681	12454	-	8622	29000	26000	19500	13000	-	9000	30102	26988	20241	13494	-	9342
		W	2213	1871	1403	935	-	502	2070	1750	1313	875	-	470	1929	1631	1223	816	-	438
35	1.7	Q(Btu/h)	21373	19162	14372	9581	-	6633	22881	20514	15386	10257	-	7101	24505	21970	16478	10985	-	7605
		W	1969	1664	1248	832	-	447	1830	1547	1160	774	-	415	1702	1439	1079	719	-	386
32	0.0	Q(Btu/h)	20416	18304	13728	9152	-	6336	21605	19370	14528	9685	-	6705	22446	20124	15093	10062	-	6966
		W	1865	1577	1183	788	-	423	1718	1453	1089	726	-	390	1604	1356	1017	678	-	364
27	-2.8	Q(Btu/h)	19459	17446	13085	8723	-	6039	20445	18330	13748	9165	-	6345	21199	19006	14255	9503	-	6579
		W	1714	1449	1087	725	-	389	1565	1323	992	662	-	355	1463	1237	928	619	-	332
22	-5.6	Q(Btu/h)	18618	16692	12519	8346	-	5778	19604	17576	13182	8788	-	6084	20358	18252	13689	9126	-	6318
		W	1590	1344	1008	672	-	361	1474	1246	935	623	-	335	1352	1143	857	571	-	307
17	-8.3	Q(Btu/h)	17980	16120	12090	8060	-	5580	18937	16978	12734	8489	-	5877	19604	17576	13182	8788	-	6084
		W	1495	1264	948	632	-	339	1395	1180	885	590	-	317	1269	1073	805	536	-	288
12	-11.1	Q(Btu/h)	17313	15522	11642	7761	-	5373	18270	16380	12285	8190	-	5670	18995	17030	12773	8515	-	5895
		W	1395	1180	885	590	-	317	1321	1117	837	558	-	300	1215	1027	770	514	-	276
5	-15.0	Q(Btu/h)	16385	14690	11018	7345	-	5085	17081	15314	11486	7657	-	5301	17516	15704	11778	7852	-	5436
		W	1271	1075	806	537	-	289	1219	1031	773	515	-	277	1126	952	714	476	-	256
2	-16.7	Q(Btu/h)	15631	14014	10511	7007	-	4851	16124	14456	10842	7228	-	5004	16472	14768	11076	7384	-	5112
		W	1219	1031	773	515	-	277	1176	994	746	497	-	267	1091	922	692	461	-	248
-3	-19.4	Q(Btu/h)	14123	12662	9497	6331	-	4383	14587	13078	9809	6539	-	4527	14819	13286	9965	6643	-	4599
		W	1143	966	725	483	-	259	1103	933	700	466	-	251	1037	877	658	438	-	235
-8	-22.2	Q(Btu/h)	12586	11284	8463	5642	-	3906	12992	11648	8736	5824	-	4032	13137	11778	8834	5889	-	4077
		W	1068	903	677	452	-	243	1031	872	654	436	-	234	983	831	623	416	-	223
-13	-25.0	Q(Btu/h)	11049	9906	7430	4953	-	3429	11397	10218	7664	5109	-	3537	11426	10244	7683	5122	-	3546
		W	998	844	633	422	-	227	956	809	606	404	-	217	934	789	592	395	-	212

PVA-A24AA8
PUZ-A24NHA8
1) COOLING

Rated
Q(Btu/h): 24000
W: 1970

Indoor W.B.			72°F / 22.2°C						67°F / 19.4°C						64°F / 17.8°C						61°F / 16.1°C					
Outdoor D.B.			Max	Rated	75%	50%	25%	Min	Max	Rated	75%	50%	25%	Min	Max	Rated	75%	50%	25%	Min	Max	Rated	75%	50%	25%	Min
(°F)	(°C)																									
115	46.1	Q(Btu/h)	23184	23184	17388	11592	-	9660	21912	21912	16434	10956	-	9130	20664	20664	15498	10332	-	8610	19392	19392	14544	9696	-	8080
		W	2372	2372	1779	1186	-	698	2325	2325	1743	1162	-	684	2281	2281	1711	1141	-	672	2242	2242	1681	1121	-	660
110	43.3	Q(Btu/h)	23808	23808	17856	11904	-	9920	22464	22464	16848	11232	-	9360	21096	21096	15822	10548	-	8790	19896	19896	14922	9948	-	8290
		W	2266	2266	1699	1133	-	667	2224	2224	1668	1112	-	655	2185	2185	1639	1092	-	643	2145	2145	1609	1073	-	632
106	41.1	Q(Btu/h)	24336	24336	18252	12168	-	10140	22968	22968	17226	11484	-	9570	21576	21576	16182	10788	-	8990	20304	20304	15228	10152	-	8460
		W	2204	2204	1653	1102	-	649	2145	2145	1609	1073	-	632	2106	2106	1579	1053	-	620	2069	2069	1551	1034	-	609
102	38.9	Q(Btu/h)	24744	24744	18558	12372	-	10310	23400	23400	17550	11700	-	9750	21936	21936	16452	10968	-	9140	20592	20592	15444	10296	-	8580
		W	2135	2135	1602	1068	-	629	2096	2096	1572	1048	-	617	2049	2049	1537	1024	-	603	2009	2009	1507	1005	-	592
98	36.7	Q(Btu/h)	25104	25104	18828	12552	-	10460	23688	23688	17766	11844	-	9870	22296	22296	16722	11148	-	9290	20904	20904	15678	10452	-	8710
		W	2069	2069	1551	1034	-	609	2029	2029	1522	1015	-	597	1990	1990	1492	995	-	586	1950	1950	1463	975	-	574
94	34.4	Q(Btu/h)	25440	25440	19080	12720	-	10600	24000	24000	18000	12000	-	10000	22584	22584	16938	11292	-	9410	21192	21192	15894	10596	-	8830
		W	2009	2009	1507	1005	-	592	1970	1970	1478	985	-	580	1935	1935	1451	967	-	570	1887	1887	1415	944	-	556
90	32.2	Q(Btu/h)	25800	25800	19350	12900	-	10750	24288	24288	18216	12144	-	10120	22872	22872	17154	11436	-	9530	21480	21480	16110	10740	-	8950
		W	1950	1950	1463	975	-	574	1911	1911	1433	955	-	563	1872	1872	1404	936	-	551	1834	1834	1376	917	-	540
86	30.0	Q(Btu/h)	26136	26136	19602	13068	-	10890	24648	24648	18486	12324	-	10270	23184	23184	17388	11592	-	9660	21768	21768	16326	10884	-	9070
		W	1897	1897	1423	949	-	559	1862	1862	1396	931	-	548	1824	1824	1368	912	-	537	1785	1785	1339	892	-	525
82	27.8	Q(Btu/h)	26376	26376	19782	13188	-	10990	24864	24864	18648	12432	-	10360	23352	23352	17514	11676	-	9730	21936	21936	16452	10968	-	9140
		W	1864	1864	1398	932	-	549	1824	1824	1368	912	-	537	1775	1775	1331	887	-	523	1745	1745	1309	873	-	514
78	25.6	Q(Btu/h)	26616	26616	19962	13308	-	11090	25104	25104	18828	12552	-	10460	23616	23616	17712	11808	-	9840	22128	22128	16596	11064	-	9220
		W	1818	1818	1364	909	-	535	1783	1783	1337	891	-	525	1743	1743	1308	872	-	513	1700	1700	1275	850	-	501
74	23.3	Q(Btu/h)	26736	26736	20052	13368	-	11140	25224	25224	18918	12612	-	10510	23808	23808	17856	11904	-	9920	22296	22296	16722	11148	-	9290
		W	1785	1785	1339	892	-	525	1745	1745	1309	873	-	514	1706	1706	1280	853	-	502	1669	1669	1251	834	-	491
70	21.1	Q(Btu/h)	26856	26856	20142	13428	-	11190	25320	25320	18990	12660	-	10550	23928	23928	17946	11964	-	9970	22416	22416	16812	11208	-	9340
		W	1755	1755	1316	878	-	517	1716	1716	1287	858	-	505	1676	1676	1257	838	-	494	1639	1639	1229	820	-	483
66	18.9	Q(Btu/h)	27024	27024	20268	13512	-	11260	25560	25560	19170	12780	-	10650	24048	24048	18036	12024	-	10020	22656	22656	16992	11328	-	9440
		W	1726	1726	1294	863	-	508	1686	1686	1265	843	-	496	1649	1649	1237	824	-	485	1609	1609	1207	805	-	474
62	16.7	Q(Btu/h)	27072	27072	20304	13536	-	11280	25632	25632	19224	12816	-	10680	24168	24168	18126	12084	-	10070	22752	22752	17064	11376	-	9480
		W	1706	1706	1280	853	-	502	1676	1676	1257	838	-	494	1629	1629	1222	815	-	480	1590	1590	1192	795	-	468
58	14.4	Q(Btu/h)	27168	27168	20376	13584	-	11320	25680	25680	19260	12840	-	10700	24144	24144	18108	12072	-	10060	22728	22728	17046	11364	-	9470
		W	1684	1684	1263	842	-	496	1643	1643	1232	821	-	484	1604	1604	1203	802	-	472	1560	1560	1170	780	-	459
54	12.2	Q(Btu/h)	27264	27264	20448	13632	-	11360	25800	25800	19350	12900	-	10750	24288	24288	18216	12144	-	10120	22872	22872	17154	11436	-	9530
		W	1676	1676	1257	838	-	494	1639	1639	1229	820	-	483	1596	1596	1197	798	-	470	1550	1550	1163	775	-	456
50	10.0	Q(Btu/h)	27312	27312	20484	13656	-	11380	25848	25848	19386	12924	-	10770	24408	24408	18306	12204	-	10170	22968	22968	17226	11484	-	9570
		W	1655	1655	1241	827	-	487	1613	1613	1210	807	-	475	1570	1570	1178	785	-	462	1527	1527	1145	763	-	450
46	7.8	Q(Btu/h)	27360	27360	20520	13680	-	11400	25920	25920	19440	12960	-	10800	24456	24456	18342	12228	-	10190	23064	23064	17298	11532	-	9610
		W	1643	1643	1232	821	-	484	1604	1604	1203	802	-	472	1560	1560	1170	780	-	459	1517	1517	1138	758	-	447
42	5.6	Q(Btu/h)	27384	27384	20538	13692	-	11410	25920	25920	19440	12960	-	10800	24504	24504	18378	12252	-	10210	23088	23088	17316	11544	-	9620
		W	1639	1639	1229	820	-	483	1598	1598	1198	799	-	470	1550	1550	1163	775	-	456	1505	1505	1129	753	-	443
38	3.3	Q(Btu/h)	27384	27384	20538	13692	-	11410	25968	25968	19476	12984	-	10820	24552	24552	18414	12276	-	10230	23160	23160	17370	11580	-	9650
		W	1629	1629	1222	815	-	480	1586	1586	1189	793	-	467	1541	1541	1155	770	-	454	1493	1493	1120	747	-	440
34	1.1	Q(Btu/h)	27408	27408	20556	13704	-	11420	25992	25992	19494	12996	-	10830	24600	24600	18450	12300	-	10250	23208	23208	17406	11604	-	9670
		W	1623	1623	1217	812	-	478	1582	1582	1186	791	-	466	1537	1537	1152	768	-	452	1491	1491	1118	746	-	439
30	-1.1	Q(Btu/h)	27408	27408	20556	13704	-	11420	25992	25992	19494	12996	-	10830	24624	24624	18468	12312	-	10260	23232	23232	17424	11616	-	9680
		W	1623	1623	1217	812	-	478	1576	1576	1182	788	-	464	1533	1533	1149	766	-	451	1485	1485	1114	743	-	437
26	-3.3	Q(Btu/h)	27432	27432	20574	13716	-	11430	26040	26040	19530	13020	-	10850	24672	24672	18504	12336	-	10280	23304	23304	17478	11652	-	9710
		W	1619	1619	1215	810	-	477	1572	1572	1179	786	-	463	1529	1529	1147	764	-	450	1481	1481	1111	741	-	436
23	-5.0	Q(Btu/h)	27432	27432	20574	13716	-	11430	26064	26064	19548	13032	-	10860	24696	24696	18522	12348	-	10290	23352	23352	17514	11676	-	9730
		W	1615	1615	1212	808	-	476	1572	1572	1179	786	-	463	1527	1527	1145	763	-	450	1481	1481	1111	741	-	436
18	-7.8	Q(Btu/h)	27504	27504	20628	13752	-	11460	26136	26136	19602	13068	-	10890	24696	24696	18522	12348	-	10290	23472	23472	17604	11736	-	9780
		W	1609	1609	1207	805	-	474	1570	1570	1178	785	-	462	1525	1525	1144	762	-	449	1481	1481	1111	741	-	436
14	-10.0	Q(Btu/h)	27504	27504	20628	13752	-	11460	26136	26136	19602	13068	-	10890	24792	24792	18594	12396	-	10330	23496	23496	17622	11748	-	9790
		W	1613	1613	1210	807	-	475	1570	1570	1178	785	-	462	1529	1529	1147	764	-	450	1483	1483	1113	742	-	437
10	-12.2	Q(Btu/h)	27552	27552	20664	13776	-	11480	26136	26136	19602	13068	-	10890	24864	24864	18648	12432	-	10360	23568	23568	17676	11784	-	9820
		W	1611	1611	1209	806	-	474	1570	1570	1178	785	-	462	1531	1531	1148	765	-	451	1485	1485	1114	743	-	437
6	-14.4	Q(Btu/h)	27576	27576	20682	13788	-	11490	26232	26232	19674	13116	-	10930	24912	24912	18684	12456	-	10380	23592	23592	17694	11796	-	9830
		W	1611	1611	1209	806	-	474	1572	1572	1179	786	-	463	1533	1533	1149	766	-	451	1491	1491	1118	746	-	439
2	-16.7	Q(Btu/h)	27648	27648	20736	13824	-	11520	26328	26328	19746	13164	-	10970	24984	24984	18738	12492	-	10410	23760	23760	17820	11880	-	9900
		W	1609	1609	1207	805	-	474	1572	1572	1179	786	-	463	1533	1533	1149	766	-	451	1493	1493	1120	747	-	440
0	-17.8	Q(Btu/h)	27696	27696	20772	13848	-	11540	26376	26376	19782	13188	-	10990	25056	25056	18792	12528	-	10440	23760	23760	17820	11880	-	9900
		W	1609	1609	1207	805	-	474	1574	1574	1181	787	-	463	1537	1537	1152	768	-	452	1497	1497	1123	749	-	441

PVA-A24AA8
PUZ-A24NHA8
2) HEATING

Rated
Q(Btu/h): 26000
W: 1920

Indoor D.B.			80°F / 26.7°C						70°F / 21.1°C						60°F / 15.6°C					
Outdoor W.B.			Max	Rated	75%	50%	25%	Min	Max	Rated	75%	50%	25%	Min	Max	Rated	75%	50%	25%	Min
(°F)	(°C)																			
70	21.1	Q(Btu/h)	37716	35022	26267	17511	-	16029	38864	36088	27066	18044	-	16517	40320	37440	28080	18720	-	17136
		W	3094	2628	1971	1314	-	876	2882	2448	1836	1224	-	816	2685	2281	1711	1140	-	760
65	18.3	Q(Btu/h)	35756	33202	24902	16601	-	15196	36904	34268	25701	17134	-	15684	38276	35542	26657	17771	-	16267
		W	2990	2540	1905	1270	-	847	2775	2358	1768	1179	-	786	2592	2202	1652	1101	-	734
60	15.6	Q(Btu/h)	33880	31460	23595	15730	-	14399	35028	32526	24395	16263	-	14887	36316	33722	25292	16861	-	15434
		W	2857	2427	1820	1213	-	809	2674	2271	1704	1136	-	757	2502	2125	1594	1063	-	708
55	12.8	Q(Btu/h)	31920	29640	22230	14820	-	13566	33068	30706	23030	15353	-	14054	34272	31824	23868	15912	-	14566
		W	2773	2356	1767	1178	-	785	2565	2179	1634	1090	-	726	2414	2051	1538	1025	-	684
50	10.0	Q(Btu/h)	29988	27846	20885	13923	-	12745	31108	28886	21665	14443	-	13221	32256	29952	22464	14976	-	13709
		W	2665	2264	1698	1132	-	755	2461	2091	1568	1045	-	697	2328	1978	1483	989	-	659
47	8.3	Q(Btu/h)	28756	26702	20027	13351	-	12221	29876	27742	20807	13871	-	12697	30996	28782	21587	14391	-	13173
		W	2579	2191	1643	1095	-	730	2393	2033	1525	1017	-	678	2253	1914	1436	957	-	638
42	5.6	Q(Btu/h)	26824	24908	18681	12454	-	11400	28000	26000	19500	13000	-	11900	29064	26988	20241	13494	-	12352
		W	2416	2052	1539	1026	-	684	2260	1920	1440	960	-	640	2106	1789	1342	895	-	596
35	1.7	Q(Btu/h)	20636	19162	14372	9581	-	8770	22092	20514	15386	10257	-	9389	23660	21970	16478	10985	-	10056
		W	2149	1826	1369	913	-	609	1998	1697	1273	849	-	566	1858	1578	1184	789	-	526
32	0.0	Q(Btu/h)	19712	18304	13728	9152	-	8378	20860	19370	14528	9685	-	8866	21672	20124	15093	10062	-	9211
		W	2036	1730	1297	865	-	577	1876	1594	1195	797	-	531	1752	1488	1116	744	-	496
27	-2.8	Q(Btu/h)	18788	17446	13085	8723	-	7985	19740	18330	13748	9165	-	8390	20468	19006	14255	9503	-	8699
		W	1871	1590	1192	795	-	530	1709	1452	1089	726	-	484	1598	1357	1018	679	-	452
22	-5.6	Q(Btu/h)	17976	16692	12519	8346	-	7640	18928	17576	13182	8788	-	8044	19656	18252	13689	9126	-	8354
		W	1736	1475	1106	737	-	492	1609	1367	1025	684	-	456	1476	1254	940	627	-	418
17	-8.3	Q(Btu/h)	17360	16120	12090	8060	-	7378	18284	16978	12734	8489	-	7771	18928	17576	13182	8788	-	8044
		W	1632	1386	1040	693	-	462	1523	1294	971	647	-	431	1385	1177	883	588	-	392
12	-11.1	Q(Btu/h)	16716	15522	11642	7761	-	7104	17640	16380	12285	8190	-	7497	18340	17030	12773	8515	-	7795
		W	1523	1294	971	647	-	431	1442	1225	919	612	-	408	1327	1127	845	564	-	376
5	-15.0	Q(Btu/h)	15820	14690	11018	7345	-	6724	16492	15314	11486	7657	-	7009	16912	15704	11778	7852	-	7188
		W	1388	1179	884	589	-	393	1331	1131	848	565	-	377	1229	1044	783	522	-	348
2	-16.7	Q(Btu/h)	15092	14014	10511	7007	-	6414	15568	14456	10842	7228	-	6616	15904	14768	11076	7384	-	6759
		W	1331	1131	848	565	-	377	1284	1091	818	545	-	364	1191	1012	759	506	-	337
-3	-19.4	Q(Btu/h)	13636	12662	9497	6331	-	5795	14084	13078	9809	6539	-	5986	14308	13286	9965	6643	-	6081
		W	1248	1060	795	530	-	353	1205	1023	768	512	-	341	1132	962	721	481	-	321
-8	-22.2	Q(Btu/h)	12152	11284	8463	5642	-	5165	12544	11648	8736	5824	-	5331	12684	11778	8834	5889	-	5391
		W	1166	991	743	495	-	330	1125	956	717	478	-	319	1074	912	684	456	-	304
-13	-25.0	Q(Btu/h)	10668	9906	7430	4953	-	4534	11004	10218	7664	5109	-	4677	11032	10244	7683	5122	-	4689
		W	1089	925	694	463	-	308	1044	887	665	444	-	296	1019	866	649	433	-	289

PKA-A24KA8
PUZ-A24NHA8
1) COOLING

Rated
Q(Btu/h): 24000
W: 1960

Indoor W.B.			72°F / 22.2°C						67°F / 19.4°C						64°F / 17.8°C						61°F / 16.1°C					
Outdoor D.B.			Max	Rated	75%	50%	25%	Min	Max	Rated	75%	50%	25%	Min	Max	Rated	75%	50%	25%	Min	Max	Rated	75%	50%	25%	Min
(°F)	(°C)																									
115	46.1	Q(Btu/h)	23184	23184	17388	11592	-	9660	21912	21912	16434	10956	-	9130	20664	20664	15498	10332	-	8610	19392	19392	14544	9696	-	8080
		W	2360	2360	1770	1180	-	710	2313	2313	1735	1156	-	696	2270	2270	1702	1135	-	683	2230	2230	1673	1115	-	671
110	43.3	Q(Btu/h)	23808	23808	17856	11904	-	9920	22464	22464	16848	11232	-	9360	21096	21096	15822	10548	-	8790	19896	19896	14922	9948	-	8290
		W	2254	2254	1691	1127	-	679	2213	2213	1660	1106	-	666	2174	2174	1630	1087	-	654	2134	2134	1601	1067	-	643
106	41.1	Q(Btu/h)	24336	24336	18252	12168	-	10140	22968	22968	17226	11484	-	9570	21576	21576	16182	10788	-	8990	20304	20304	15228	10152	-	8460
		W	2193	2193	1645	1097	-	660	2134	2134	1601	1067	-	643	2095	2095	1571	1048	-	631	2058	2058	1544	1029	-	620
102	38.9	Q(Btu/h)	24744	24744	18558	12372	-	10310	23400	23400	17550	11700	-	9750	21936	21936	16452	10968	-	9140	20592	20592	15444	10296	-	8580
		W	2125	2125	1593	1062	-	640	2085	2085	1564	1043	-	628	2038	2038	1529	1019	-	614	1999	1999	1499	1000	-	602
98	36.7	Q(Btu/h)	25104	25104	18828	12552	-	10460	23688	23688	17766	11844	-	9870	22296	22296	16722	11148	-	9290	20904	20904	15678	10452	-	8710
		W	2058	2058	1544	1029	-	620	2019	2019	1514	1009	-	608	1980	1980	1485	990	-	596	1940	1940	1455	970	-	584
94	34.4	Q(Btu/h)	25440	25440	19080	12720	-	10600	24000	24000	18000	12000	-	10000	22584	22584	16938	11292	-	9410	21192	21192	15894	10596	-	8830
		W	1999	1999	1499	1000	-	602	1960	1960	1470	980	-	590	1925	1925	1444	962	-	579	1878	1878	1408	939	-	565
90	32.2	Q(Btu/h)	25800	25800	19350	12900	-	10750	24288	24288	18216	12144	-	10120	22872	22872	17154	11436	-	9530	21480	21480	16110	10740	-	8950
		W	1940	1940	1455	970	-	584	1901	1901	1426	951	-	572	1862	1862	1397	931	-	561	1825	1825	1369	912	-	549
86	30.0	Q(Btu/h)	26136	26136	19602	13068	-	10890	24648	24648	18486	12324	-	10270	23184	23184	17388	11592	-	9660	21768	21768	16326	10884	-	9070
		W	1887	1887	1416	944	-	568	1852	1852	1389	926	-	558	1815	1815	1361	907	-	546	1776	1776	1332	888	-	535
82	27.8	Q(Btu/h)	26376	26376	19782	13188	-	10990	24864	24864	18648	12432	-	10360	23352	23352	17514	11676	-	9730	21936	21936	16452	10968	-	9140
		W	1854	1854	1391	927	-	558	1815	1815	1361	907	-	546	1766	1766	1324	883	-	532	1737	1737	1302	868	-	523
78	25.6	Q(Btu/h)	26616	26616	19962	13308	-	11090	25104	25104	18828	12552	-	10460	23616	23616	17712	11808	-	9840	22128	22128	16596	11064	-	9220
		W	1809	1809	1357	905	-	545	1774	1774	1330	887	-	534	1735	1735	1301	867	-	522	1691	1691	1269	846	-	509
74	23.3	Q(Btu/h)	26736	26736	20052	13368	-	11140	25224	25224	18918	12612	-	10510	23808	23808	17856	11904	-	9920	22296	22296	16722	11148	-	9290
		W	1776	1776	1332	888	-	535	1737	1737	1302	868	-	523	1697	1697	1273	849	-	511	1660	1660	1245	830	-	500
70	21.1	Q(Btu/h)	26856	26856	20142	13428	-	11190	25320	25320	18990	12660	-	10550	23928	23928	17946	11964	-	9970	22416	22416	16812	11208	-	9340
		W	1746	1746	1310	873	-	526	1707	1707	1280	854	-	514	1668	1668	1251	834	-	502	1631	1631	1223	815	-	491
66	18.9	Q(Btu/h)	27024	27024	20268	13512	-	11260	25560	25560	19170	12780	-	10650	24048	24048	18036	12024	-	10020	22656	22656	16992	11328	-	9440
		W	1717	1717	1288	858	-	517	1678	1678	1258	839	-	505	1641	1641	1230	820	-	494	1601	1601	1201	801	-	482
62	16.7	Q(Btu/h)	27072	27072	20304	13536	-	11280	25632	25632	19224	12816	-	10680	24168	24168	18126	12084	-	10070	22752	22752	17064	11376	-	9480
		W	1697	1697	1273	849	-	511	1668	1668	1251	834	-	502	1621	1621	1216	810	-	488	1582	1582	1186	791	-	476
58	14.4	Q(Btu/h)	27168	27168	20376	13584	-	11320	25680	25680	19260	12840	-	10700	24144	24144	18108	12072	-	10060	22728	22728	17046	11364	-	9470
		W	1676	1676	1257	838	-	504	1635	1635	1226	817	-	492	1595	1595	1197	798	-	480	1552	1552	1164	776	-	467
54	12.2	Q(Btu/h)	27264	27264	20448	13632	-	11360	25800	25800	19350	12900	-	10750	24288	24288	18216	12144	-	10120	22872	22872	17154	11436	-	9530
		W	1668	1668	1251	834	-	502	1631	1631	1223	815	-	491	1588	1588	1191	794	-	478	1543	1543	1157	771	-	464
50	10.0	Q(Btu/h)	27312	27312	20484	13656	-	11380	25848	25848	19386	12924	-	10770	24408	24408	18306	12204	-	10170	22968	22968	17226	11484	-	9570
		W	1646	1646	1235	823	-	496	1605	1605	1204	803	-	483	1562	1562	1172	781	-	470	1519	1519	1139	760	-	457
46	7.8	Q(Btu/h)	27360	27360	20520	13680	-	11400	25920	25920	19440	12960	-	10800	24456	24456	18342	12228	-	10190	23064	23064	17298	11532	-	9610
		W	1635	1635	1226	817	-	492	1595	1595	1197	798	-	480	1552	1552	1164	776	-	467	1509	1509	1132	755	-	454
42	5.6	Q(Btu/h)	27384	27384	20538	13692	-	11410	25920	25920	19440	12960	-	10800	24504	24504	18378	12252	-	10210	23088	23088	17316	11544	-	9620
		W	1631	1631	1223	815	-	491	1590	1590	1192	795	-	478	1543	1543	1157	771	-	464	1497	1497	1123	749	-	451
38	3.3	Q(Btu/h)	27384	27384	20538	13692	-	11410	25968	25968	19476	12984	-	10820	24552	24552	18414	12276	-	10230	23160	23160	17370	11580	-	9650
		W	1621	1621	1216	810	-	488	1578	1578	1183	789	-	475	1533	1533	1150	766	-	461	1486	1486	1114	743	-	447
34	1.1	Q(Btu/h)	27408	27408	20556	13704	-	11420	25992	25992	19494	12996	-	10830	24600	24600	18450	12300	-	10250	23208	23208	17406	11604	-	9670
		W	1615	1615	1211	808	-	486	1574	1574	1180	787	-	474	1529	1529	1147	764	-	460	1484	1484	1113	742	-	447
30	-1.1	Q(Btu/h)	27408	27408	20556	13704	-	11420	25992	25992	19494	12996	-	10830	24624	24624	18468	12312	-	10260	23232	23232	17424	11616	-	9680
		W	1615	1615	1211	808	-	486	1568	1568	1176	784	-	472	1525	1525	1144	762	-	459	1478	1478	1108	739	-	445
26	-3.3	Q(Btu/h)	27432	27432	20574	13716	-	11430	26040	26040	19530	13020	-	10850	24672	24672	18504	12336	-	10280	23304	23304	17478	11652	-	9710
		W	1611	1611	1208	806	-	485	1564	1564	1173	782	-	471	1521	1521	1141	760	-	458	1474	1474	1105	737	-	444
23	-5.0	Q(Btu/h)	27432	27432	20574	13716	-	11430	26064	26064	19548	13032	-	10860	24696	24696	18522	12348	-	10290	23352	23352	17514	11676	-	9730
		W	1607	1607	1205	804	-	484	1564	1564	1173	782	-	471	1519	1519	1139	760	-	457	1474	1474	1105	737	-	444
18	-7.8	Q(Btu/h)	27504	27504	20628	13752	-	11460	26136	26136	19602	13068	-	10890	24696	24696	18522	12348	-	10290	23472	23472	17604	11736	-	9780
		W	1601	1601	1201	801	-	482	1562	1562	1172	781	-	470	1517	1517	1138	759	-	457	1474	1474	1105	737	-	444
14	-10.0	Q(Btu/h)	27504	27504	20628	13752	-	11460	26136	26136	19602	13068	-	10890	24792	24792	18594	12396	-	10330	23496	23496	17622	11748	-	9790
		W	1605	1605	1204	803	-	483	1562	1562	1172	781	-	470	1521	1521	1141	760	-	458	1476	1476	1107	738	-	444
10	-12.2	Q(Btu/h)	27552	27552	20664	13776	-	11480	26136	26136	19602	13068	-	10890	24864	24864	18648	12432	-	10360	23568	23568	17676	11784	-	9820
		W	1603	1603	1202	802	-	483	1562	1562	1172	781	-	470	1523	1523	1142	761	-	458	1478	1478	1108	739	-	445
6	-14.4	Q(Btu/h)	27576	27576	20682	13788	-	11490	26232	26232	19674	13116	-	10930	24912	24912	18684	12456	-	10380	23592	23592	17694	11796	-	9830
		W	1603	1603	1202	802	-	483	1564	1564	1173	782	-	471	1525	1525	1144	762	-	459	1484	1484	1113	742	-	447
2	-16.7	Q(Btu/h)	27648	27648	20736	13824	-	11520	26328	26328	19746	13164	-	10970	24984	24984	18738	12492	-	10410	23760	23760	17820	11880	-	9900
		W	1601	1601	1201	801	-	482	1564	1564	1173	782	-	471	1525	1525	1144	762	-	459	1486	1486	1114	743	-	447
0	-17.8	Q(Btu/h)	27696	27696	20772	13848	-	11540	26376	26376	19782	13188	-	10990	25056	25056	18792	12528	-	10440	23760	23760	17820	11880	-	9900
		W	1601	1601	1201	801	-	482	1566	1566	1175	783	-	471	1529	1529	1147	764	-	460	1490	1490	1117	745	-	448

PKA-A24KA8
PUZ-A24NHA8
2) HEATING

Rated
Q(Btu/h): 26000
W: 1750

Indoor D.B.			80°F / 26.7°C						70°F / 21.1°C						60°F / 15.6°C					
Outdoor W.B.			Max	Rated	75%	50%	25%	Min	Max	Rated	75%	50%	25%	Min	Max	Rated	75%	50%	25%	Min
(°F)	(°C)																			
70	21.1	Q(Btu/h)	37716	35022	26267	17511	-	12123	38864	36088	27066	18044	-	12492	40320	37440	28080	18720	-	12960
		W	3559	2396	1797	1198	-	685	3315	2231	1673	1116	-	638	3089	2079	1559	1040	-	594
65	18.3	Q(Btu/h)	35756	33202	24902	16601	-	11493	36904	34268	25701	17134	-	11862	38276	35542	26657	17771	-	12303
		W	3440	2315	1736	1158	-	662	3193	2149	1612	1075	-	614	2982	2007	1505	1004	-	574
60	15.6	Q(Btu/h)	33880	31460	23595	15730	-	10890	35028	32526	24395	16263	-	11259	36316	33722	25292	16861	-	11673
		W	3286	2212	1659	1106	-	632	3076	2070	1553	1035	-	592	2878	1937	1453	969	-	554
55	12.8	Q(Btu/h)	31920	29640	22230	14820	-	10260	33068	30706	23030	15353	-	10629	34272	31824	23868	15912	-	11016
		W	3190	2147	1610	1074	-	614	2951	1986	1490	993	-	568	2777	1869	1402	935	-	534
50	10.0	Q(Btu/h)	29988	27846	20885	13923	-	9639	31108	28886	21665	14443	-	9999	32256	29952	22464	14976	-	10368
		W	3065	2063	1547	1032	-	590	2831	1906	1429	953	-	545	2678	1803	1352	901	-	515
47	8.3	Q(Btu/h)	28756	26702	20027	13351	-	9243	29876	27742	20807	13871	-	9603	30996	28782	21587	14391	-	9963
		W	2967	1997	1498	998	-	571	2753	1853	1390	927	-	530	2592	1745	1309	872	-	499
42	5.6	Q(Btu/h)	26824	24908	18681	12454	-	8622	28000	26000	19500	13000	-	9000	29064	26988	20241	13494	-	9342
		W	2779	1871	1403	935	-	535	2600	1750	1313	875	-	500	2423	1631	1223	816	-	466
35	1.7	Q(Btu/h)	20636	19162	14372	9581	-	6633	22092	20514	15386	10257	-	7101	23660	21970	16478	10985	-	7605
		W	2473	1664	1248	832	-	476	2298	1547	1160	774	-	442	2137	1439	1079	719	-	411
32	0.0	Q(Btu/h)	19712	18304	13728	9152	-	6336	20860	19370	14528	9685	-	6705	21672	20124	15093	10062	-	6966
		W	2343	1577	1183	788	-	451	2158	1453	1089	726	-	415	2015	1356	1017	678	-	388
27	-2.8	Q(Btu/h)	18788	17446	13085	8723	-	6039	19740	18330	13748	9165	-	6345	20468	19006	14255	9503	-	6579
		W	2153	1449	1087	725	-	414	1966	1323	992	662	-	378	1838	1237	928	619	-	354
22	-5.6	Q(Btu/h)	17976	16692	12519	8346	-	5778	18928	17576	13182	8788	-	6084	19656	18252	13689	9126	-	6318
		W	1997	1344	1008	672	-	384	1851	1246	935	623	-	356	1698	1143	857	571	-	327
17	-8.3	Q(Btu/h)	17360	16120	12090	8060	-	5580	18284	16978	12734	8489	-	5877	18928	17576	13182	8788	-	6084
		W	1877	1264	948	632	-	361	1752	1180	885	590	-	337	1594	1073	805	536	-	307
12	-11.1	Q(Btu/h)	16716	15522	11642	7761	-	5373	17640	16380	12285	8190	-	5670	18340	17030	12773	8515	-	5895
		W	1752	1180	885	590	-	337	1659	1117	837	558	-	319	1526	1027	770	514	-	294
5	-15.0	Q(Btu/h)	15820	14690	11018	7345	-	5085	16492	15314	11486	7657	-	5301	16912	15704	11778	7852	-	5436
		W	1596	1075	806	537	-	307	1531	1031	773	515	-	295	1414	952	714	476	-	272
2	-16.7	Q(Btu/h)	15092	14014	10511	7007	-	4851	15568	14456	10842	7228	-	5004	15904	14768	11076	7384	-	5112
		W	1531	1031	773	515	-	295	1477	994	746	497	-	284	1370	922	692	461	-	264
-3	-19.4	Q(Btu/h)	13636	12662	9497	6331	-	4383	14084	13078	9809	6539	-	4527	14308	13286	9965	6643	-	4599
		W	1435	966	725	483	-	276	1386	933	700	466	-	267	1303	877	658	438	-	251
-8	-22.2	Q(Btu/h)	12152	11284	8463	5642	-	3906	12544	11648	8736	5824	-	4032	12684	11778	8834	5889	-	4077
		W	1342	903	677	452	-	258	1295	872	654	436	-	249	1235	831	623	416	-	238
-13	-25.0	Q(Btu/h)	10668	9906	7430	4953	-	3429	11004	10218	7664	5109	-	3537	11032	10244	7683	5122	-	3546
		W	1253	844	633	422	-	241	1201	809	606	404	-	231	1173	789	592	395	-	226

PCA-A24KA8
PUZ-A24NHA8
1) COOLING

Rated
Q(Btu/h): 24000
W: 1960

Indoor W.B.			72°F / 22.2°C						67°F / 19.4°C						64°F / 17.8°C						61°F / 16.1°C					
Outdoor D.B.			Max	Rated	75%	50%	25%	Min	Max	Rated	75%	50%	25%	Min	Max	Rated	75%	50%	25%	Min	Max	Rated	75%	50%	25%	Min
(°F)	(°C)																									
115	46.1	Q(Btu/h)	23184	23184	17388	11592	-	9660	21912	21912	16434	10956	-	9130	20664	20664	15498	10332	-	8610	19392	19392	14544	9696	-	8080
		W	2360	2360	1770	1180	-	722	2313	2313	1735	1156	-	708	2270	2270	1702	1135	-	695	2230	2230	1673	1115	-	683
110	43.3	Q(Btu/h)	23808	23808	17856	11904	-	9920	22464	22464	16848	11232	-	9360	21096	21096	15822	10548	-	8790	19896	19896	14922	9948	-	8290
		W	2254	2254	1691	1127	-	690	2213	2213	1660	1106	-	677	2174	2174	1630	1087	-	665	2134	2134	1601	1067	-	653
106	41.1	Q(Btu/h)	24336	24336	18252	12168	-	10140	22968	22968	17226	11484	-	9570	21576	21576	16182	10788	-	8990	20304	20304	15228	10152	-	8460
		W	2193	2193	1645	1097	-	671	2134	2134	1601	1067	-	653	2095	2095	1571	1048	-	641	2058	2058	1544	1029	-	630
102	38.9	Q(Btu/h)	24744	24744	18558	12372	-	10310	23400	23400	17550	11700	-	9750	21936	21936	16452	10968	-	9140	20592	20592	15444	10296	-	8580
		W	2125	2125	1593	1062	-	650	2085	2085	1564	1043	-	638	2038	2038	1529	1019	-	624	1999	1999	1499	1000	-	612
98	36.7	Q(Btu/h)	25104	25104	18828	12552	-	10460	23688	23688	17766	11844	-	9870	22296	22296	16722	11148	-	9290	20904	20904	15678	10452	-	8710
		W	2058	2058	1544	1029	-	630	2019	2019	1514	1009	-	618	1980	1980	1485	990	-	606	1940	1940	1455	970	-	594
94	34.4	Q(Btu/h)	25440	25440	19080	12720	-	10600	24000	24000	18000	12000	-	10000	22584	22584	16938	11292	-	9410	21192	21192	15894	10596	-	8830
		W	1999	1999	1499	1000	-	612	1960	1960	1470	980	-	600	1925	1925	1444	962	-	589	1878	1878	1408	939	-	575
90	32.2	Q(Btu/h)	25800	25800	19350	12900	-	10750	24288	24288	18216	12144	-	10120	22872	22872	17154	11436	-	9530	21480	21480	16110	10740	-	8950
		W	1940	1940	1455	970	-	594	1901	1901	1426	951	-	582	1862	1862	1397	931	-	570	1825	1825	1369	912	-	559
86	30.0	Q(Btu/h)	26136	26136	19602	13068	-	10890	24648	24648	18486	12324	-	10270	23184	23184	17388	11592	-	9660	21768	21768	16326	10884	-	9070
		W	1887	1887	1416	944	-	578	1852	1852	1389	926	-	567	1815	1815	1361	907	-	556	1776	1776	1332	888	-	544
82	27.8	Q(Btu/h)	26376	26376	19782	13188	-	10990	24864	24864	18648	12432	-	10360	23352	23352	17514	11676	-	9730	21936	21936	16452	10968	-	9140
		W	1854	1854	1391	927	-	568	1815	1815	1361	907	-	556	1766	1766	1324	883	-	541	1737	1737	1302	868	-	532
78	25.6	Q(Btu/h)	26616	26616	19962	13308	-	11090	25104	25104	18828	12552	-	10460	23616	23616	17712	11808	-	9840	22128	22128	16596	11064	-	9220
		W	1809	1809	1357	905	-	554	1774	1774	1330	887	-	543	1735	1735	1301	867	-	531	1691	1691	1269	846	-	518
74	23.3	Q(Btu/h)	26736	26736	20052	13368	-	11140	25224	25224	18918	12612	-	10510	23808	23808	17856	11904	-	9920	22296	22296	16722	11148	-	9290
		W	1776	1776	1332	888	-	544	1737	1737	1302	868	-	532	1697	1697	1273	849	-	520	1660	1660	1245	830	-	508
70	21.1	Q(Btu/h)	26856	26856	20142	13428	-	11190	25320	25320	18990	12660	-	10550	23928	23928	17946	11964	-	9970	22416	22416	16812	11208	-	9340
		W	1746	1746	1310	873	-	535	1707	1707	1280	854	-	523	1668	1668	1251	834	-	511	1631	1631	1223	815	-	499
66	18.9	Q(Btu/h)	27024	27024	20268	13512	-	11260	25560	25560	19170	12780	-	10650	24048	24048	18036	12024	-	10020	22656	22656	16992	11328	-	9440
		W	1717	1717	1288	858	-	526	1678	1678	1258	839	-	514	1641	1641	1230	820	-	502	1601	1601	1201	801	-	490
62	16.7	Q(Btu/h)	27072	27072	20304	13536	-	11280	25632	25632	19224	12816	-	10680	24168	24168	18126	12084	-	10070	22752	22752	17064	11376	-	9480
		W	1697	1697	1273	849	-	520	1668	1668	1251	834	-	511	1621	1621	1216	810	-	496	1582	1582	1186	791	-	484
58	14.4	Q(Btu/h)	27168	27168	20376	13584	-	11320	25680	25680	19260	12840	-	10700	24144	24144	18108	12072	-	10060	22728	22728	17046	11364	-	9470
		W	1676	1676	1257	838	-	513	1635	1635	1226	817	-	500	1595	1595	1197	798	-	488	1552	1552	1164	776	-	475
54	12.2	Q(Btu/h)	27264	27264	20448	13632	-	11360	25800	25800	19350	12900	-	10750	24288	24288	18216	12144	-	10120	22872	22872	17154	11436	-	9530
		W	1668	1668	1251	834	-	511	1631	1631	1223	815	-	499	1588	1588	1191	794	-	486	1543	1543	1157	771	-	472
50	10.0	Q(Btu/h)	27312	27312	20484	13656	-	11380	25848	25848	19386	12924	-	10770	24408	24408	18306	12204	-	10170	22968	22968	17226	11484	-	9570
		W	1646	1646	1235	823	-	504	1605	1605	1204	803	-	491	1562	1562	1172	781	-	478	1519	1519	1139	760	-	465
46	7.8	Q(Btu/h)	27360	27360	20520	13680	-	11400	25920	25920	19440	12960	-	10800	24456	24456	18342	12228	-	10190	23064	23064	17298	11532	-	9610
		W	1635	1635	1226	817	-	500	1595	1595	1197	798	-	488	1552	1552	1164	776	-	475	1509	1509	1132	755	-	462
42	5.6	Q(Btu/h)	27384	27384	20538	13692	-	11410	25920	25920	19440	12960	-	10800	24504	24504	18378	12252	-	10210	23088	23088	17316	11544	-	9620
		W	1631	1631	1223	815	-	499	1590	1590	1192	795	-	487	1543	1543	1157	771	-	472	1497	1497	1123	749	-	458
38	3.3	Q(Btu/h)	27384	27384	20538	13692	-	11410	25968	25968	19476	12984	-	10820	24552	24552	18414	12276	-	10230	23160	23160	17370	11580	-	9650
		W	1621	1621	1216	810	-	496	1578	1578	1183	789	-	483	1533	1533	1150	766	-	469	1486	1486	1114	743	-	455
34	1.1	Q(Btu/h)	27408	27408	20556	13704	-	11420	25992	25992	19494	12996	-	10830	24600	24600	18450	12300	-	10250	23208	23208	17406	11604	-	9670
		W	1615	1615	1211	808	-	494	1574	1574	1180	787	-	482	1529	1529	1147	764	-	468	1484	1484	1113	742	-	454
30	-1.1	Q(Btu/h)	27408	27408	20556	13704	-	11420	25992	25992	19494	12996	-	10830	24624	24624	18468	12312	-	10260	23232	23232	17424	11616	-	9680
		W	1615	1615	1211	808	-	494	1568	1568	1176	784	-	480	1525	1525	1144	762	-	467	1478	1478	1108	739	-	452
26	-3.3	Q(Btu/h)	27432	27432	20574	13716	-	11430	26040	26040	19530	13020	-	10850	24672	24672	18504	12336	-	10280	23304	23304	17478	11652	-	9710
		W	1611	1611	1208	806	-	493	1564	1564	1173	782	-	479	1521	1521	1141	760	-	466	1474	1474	1105	737	-	451
23	-5.0	Q(Btu/h)	27432	27432	20574	13716	-	11430	26064	26064	19548	13032	-	10860	24696	24696	18522	12348	-	10290	23352	23352	17514	11676	-	9730
		W	1607	1607	1205	804	-	492	1564	1564	1173	782	-	479	1519	1519	1139	760	-	465	1474	1474	1105	737	-	451
18	-7.8	Q(Btu/h)	27504	27504	20628	13752	-	11460	26136	26136	19602	13068	-	10890	24696	24696	18522	12348	-	10290	23472	23472	17604	11736	-	9780
		W	1601	1601	1201	801	-	490	1562	1562	1172	781	-	478	1517	1517	1138	759	-	464	1474	1474	1105	737	-	451
14	-10.0	Q(Btu/h)	27504	27504	20628	13752	-	11460	26136	26136	19602	13068	-	10890	24792	24792	18594	12396	-	10330	23496	23496	17622	11748	-	9790
		W	1605	1605	1204	803	-	491	1562	1562	1172	781	-	478	1521	1521	1141	760	-	466	1476	1476	1107	738	-	452
10	-12.2	Q(Btu/h)	27552	27552	20664	13776	-	11480	26136	26136	19602	13068	-	10890	24864	24864	18648	12432	-	10360	23568	23568	17676	11784	-	9820
		W	1603	1603	1202	802	-	491	1562	1562	1172	781	-	478	1523	1523	1142	761	-	466	1478	1478	1108	739	-	452
6	-14.4	Q(Btu/h)	27576	27576	20682	13788	-	11490	26232	26232	19674	13116	-	10930	24912	24912	18684	12456	-	10380	23592	23592	17694	11796	-	9830
		W	1603	1603	1202	802	-	491	1564	1564	1173	782	-	479	1525	1525	1144	762	-	467	1484	1484	1113	742	-	454
2	-16.7	Q(Btu/h)	27648	27648	20736	13824	-	11520	26328	26328	19746	13164	-	10970	24984	24984	18738	12492	-	10410	23760	23760	17820	11880	-	9900
		W	1601	1601	1201	801	-	490	1564	1564	1173	782	-	479	1525	1525	1144	762	-	467	1486	1486	1114	743	-	455
0	-17.8	Q(Btu/h)	27696	27696	20772	13848	-	11540	26376	26376	19782	13188	-	10990	25056	25056	18792	12528	-	10440	23760	23760	17820	11880	-	9900
		W	1601	1601	1201	801	-	490	1566	1566	1175	783	-	479	1529	1529	1147	764	-	468	1490	1490	1117	745	-	456

PCA-A24KA8
PUZ-A24NHA8
2) HEATING

Rated
Q(Btu/h): 26000
W: 1800

Indoor D.B.			80°F / 26.7°C						70°F / 21.1°C						60°F / 15.6°C					
Outdoor W.B.			Max	Rated	75%	50%	25%	Min	Max	Rated	75%	50%	25%	Min	Max	Rated	75%	50%	25%	Min
(°F)	(°C)																			
70	21.1	Q(Btu/h)	37716	35022	26267	17511	-	11854	38864	36088	27066	18044	-	12214	40320	37440	28080	18720	-	12672
		W	3053	2464	1848	1232	-	671	2843	2295	1721	1148	-	625	2649	2138	1604	1069	-	582
65	18.3	Q(Btu/h)	35756	33202	24902	16601	-	11238	36904	34268	25701	17134	-	11598	38276	35542	26657	17771	-	12030
		W	2950	2381	1786	1191	-	648	2738	2210	1658	1105	-	602	2558	2065	1548	1032	-	562
60	15.6	Q(Btu/h)	33880	31460	23595	15730	-	10648	35028	32526	24395	16263	-	11009	36316	33722	25292	16861	-	11414
		W	2819	2275	1706	1138	-	619	2638	2129	1597	1065	-	580	2469	1993	1494	996	-	542
55	12.8	Q(Btu/h)	31920	29640	22230	14820	-	10032	33068	30706	23030	15353	-	10393	34272	31824	23868	15912	-	10771
		W	2736	2209	1656	1104	-	601	2531	2043	1532	1022	-	556	2382	1922	1442	961	-	523
50	10.0	Q(Btu/h)	29988	27846	20885	13923	-	9425	31108	28886	21665	14443	-	9777	32256	29952	22464	14976	-	10138
		W	2629	2122	1592	1061	-	578	2428	1960	1470	980	-	534	2297	1854	1391	927	-	505
47	8.3	Q(Btu/h)	28756	26702	20027	13351	-	9038	29876	27742	20807	13871	-	9390	30996	28782	21587	14391	-	9742
		W	2544	2054	1540	1027	-	559	2362	1906	1430	953	-	519	2223	1795	1346	897	-	489
42	5.6	Q(Btu/h)	26824	24908	18681	12454	-	8430	28000	26000	19500	13000	-	8800	29064	26988	20241	13494	-	9134
		W	2384	1924	1443	962	-	524	2230	1800	1350	900	-	490	2078	1678	1258	839	-	457
35	1.7	Q(Btu/h)	20636	19162	14372	9581	-	6486	22092	20514	15386	10257	-	6943	23660	21970	16478	10985	-	7436
		W	2121	1712	1284	856	-	466	1971	1591	1193	796	-	433	1833	1480	1110	740	-	403
32	0.0	Q(Btu/h)	19712	18304	13728	9152	-	6195	20860	19370	14528	9685	-	6556	21672	20124	15093	10062	-	6811
		W	2009	1622	1216	811	-	441	1851	1494	1121	747	-	407	1728	1395	1046	698	-	380
27	-2.8	Q(Btu/h)	18788	17446	13085	8723	-	5905	19740	18330	13748	9165	-	6204	20468	19006	14255	9503	-	6433
		W	1846	1490	1118	745	-	406	1686	1361	1021	680	-	370	1577	1273	954	636	-	346
22	-5.6	Q(Btu/h)	17976	16692	12519	8346	-	5650	18928	17576	13182	8788	-	5949	19656	18252	13689	9126	-	6178
		W	1713	1382	1037	691	-	376	1588	1282	961	641	-	349	1456	1175	882	588	-	320
17	-8.3	Q(Btu/h)	17360	16120	12090	8060	-	5456	18284	16978	12734	8489	-	5746	18928	17576	13182	8788	-	5949
		W	1610	1300	975	650	-	354	1503	1213	910	607	-	330	1367	1103	828	552	-	300
12	-11.1	Q(Btu/h)	16716	15522	11642	7761	-	5254	17640	16380	12285	8190	-	5544	18340	17030	12773	8515	-	5764
		W	1503	1213	910	607	-	330	1423	1148	861	574	-	313	1309	1057	792	528	-	288
5	-15.0	Q(Btu/h)	15820	14690	11018	7345	-	4972	16492	15314	11486	7657	-	5183	16912	15704	11778	7852	-	5315
		W	1369	1105	829	553	-	301	1313	1060	795	530	-	289	1213	979	734	490	-	267
2	-16.7	Q(Btu/h)	15092	14014	10511	7007	-	4743	15568	14456	10842	7228	-	4893	15904	14768	11076	7384	-	4998
		W	1313	1060	795	530	-	289	1267	1022	767	511	-	278	1175	949	711	474	-	258
-3	-19.4	Q(Btu/h)	13636	12662	9497	6331	-	4286	14084	13078	9809	6539	-	4426	14308	13286	9965	6643	-	4497
		W	1231	994	745	497	-	270	1189	959	720	480	-	261	1117	902	676	451	-	245
-8	-22.2	Q(Btu/h)	12152	11284	8463	5642	-	3819	12544	11648	8736	5824	-	3942	12684	11778	8834	5889	-	3986
		W	1151	929	697	464	-	253	1111	896	672	448	-	244	1059	855	641	428	-	233
-13	-25.0	Q(Btu/h)	10668	9906	7430	4953	-	3353	11004	10218	7664	5109	-	3458	11032	10244	7683	5122	-	3467
		W	1075	868	651	434	-	236	1030	832	624	416	-	226	1006	812	609	406	-	221

PEAD-A24AA8
PUZ-A24NHA8
1) COOLING

Rated
Q(Btu/h): 24000
W: 1960

Indoor W.B.			72°F / 22.2°C						67°F / 19.4°C						64°F / 17.8°C						61°F / 16.1°C					
Outdoor D.B.			Max	Rated	75%	50%	25%	Min	Max	Rated	75%	50%	25%	Min	Max	Rated	75%	50%	25%	Min	Max	Rated	75%	50%	25%	Min
(°F)	(°C)																									
115	46.1	Q(Btu/h)	23184	23184	17388	11592	-	9274	21912	21912	16434	10956	-	8765	20664	20664	15498	10332	-	8266	19392	19392	14544	9696	-	7757
		W	2360	2360	1770	1180	-	759	2313	2313	1735	1156	-	743	2270	2270	1702	1135	-	730	2230	2230	1673	1115	-	717
110	43.3	Q(Btu/h)	23808	23808	17856	11904	-	9523	22464	22464	16848	11232	-	8986	21096	21096	15822	10548	-	8438	19896	19896	14922	9948	-	7958
		W	2254	2254	1691	1127	-	725	2213	2213	1660	1106	-	711	2174	2174	1630	1087	-	699	2134	2134	1601	1067	-	686
106	41.1	Q(Btu/h)	24336	24336	18252	12168	-	9734	22968	22968	17226	11484	-	9187	21576	21576	16182	10788	-	8630	20304	20304	15228	10152	-	8122
		W	2193	2193	1645	1097	-	705	2134	2134	1601	1067	-	686	2095	2095	1571	1048	-	673	2058	2058	1544	1029	-	662
102	38.9	Q(Btu/h)	24744	24744	18558	12372	-	9898	23400	23400	17550	11700	-	9360	21936	21936	16452	10968	-	8774	20592	20592	15444	10296	-	8237
		W	2125	2125	1593	1062	-	683	2085	2085	1564	1043	-	670	2038	2038	1529	1019	-	655	1999	1999	1499	1000	-	643
98	36.7	Q(Btu/h)	25104	25104	18828	12552	-	10042	23688	23688	17766	11844	-	9475	22296	22296	16722	11148	-	8918	20904	20904	15678	10452	-	8362
		W	2058	2058	1544	1029	-	662	2019	2019	1514	1009	-	649	1980	1980	1485	990	-	636	1940	1940	1455	970	-	624
94	34.4	Q(Btu/h)	25440	25440	19080	12720	-	10176	24000	24000	18000	12000	-	9600	22584	22584	16938	11292	-	9034	21192	21192	15894	10596	-	8477
		W	1999	1999	1499	1000	-	643	1960	1960	1470	980	-	630	1925	1925	1444	962	-	619	1878	1878	1408	939	-	604
90	32.2	Q(Btu/h)	25800	25800	19350	12900	-	10320	24288	24288	18216	12144	-	9715	22872	22872	17154	11436	-	9149	21480	21480	16110	10740	-	8592
		W	1940	1940	1455	970	-	624	1901	1901	1426	951	-	611	1862	1862	1397	931	-	599	1825	1825	1369	912	-	587
86	30.0	Q(Btu/h)	26136	26136	19602	13068	-	10454	24648	24648	18486	12324	-	9859	23184	23184	17388	11592	-	9274	21768	21768	16326	10884	-	8707
		W	1887	1887	1416	944	-	607	1852	1852	1389	926	-	595	1815	1815	1361	907	-	583	1776	1776	1332	888	-	571
82	27.8	Q(Btu/h)	26376	26376	19782	13188	-	10550	24864	24864	18648	12432	-	9946	23352	23352	17514	11676	-	9341	21936	21936	16452	10968	-	8774
		W	1854	1854	1391	927	-	596	1815	1815	1361	907	-	583	1766	1766	1324	883	-	568	1737	1737	1302	868	-	558
78	25.6	Q(Btu/h)	26616	26616	19962	13308	-	10646	25104	25104	18828	12552	-	10042	23616	23616	17712	11808	-	9446	22128	22128	16596	11064	-	8851
		W	1809	1809	1357	905	-	581	1774	1774	1330	887	-	570	1735	1735	1301	867	-	558	1691	1691	1269	846	-	544
74	23.3	Q(Btu/h)	26736	26736	20052	13368	-	10694	25224	25224	18918	12612	-	10090	23808	23808	17856	11904	-	9523	22296	22296	16722	11148	-	8918
		W	1776	1776	1332	888	-	571	1737	1737	1302	868	-	558	1697	1697	1273	849	-	546	1660	1660	1245	830	-	534
70	21.1	Q(Btu/h)	26856	26856	20142	13428	-	10742	25320	25320	18990	12660	-	10128	23928	23928	17946	11964	-	9571	22416	22416	16812	11208	-	8966
		W	1746	1746	1310	873	-	561	1707	1707	1280	854	-	549	1668	1668	1251	834	-	536	1631	1631	1223	815	-	524
66	18.9	Q(Btu/h)	27024	27024	20268	13512	-	10810	25560	25560	19170	12780	-	10224	24048	24048	18036	12024	-	9619	22656	22656	16992	11328	-	9062
		W	1717	1717	1288	858	-	552	1678	1678	1258	839	-	539	1641	1641	1230	820	-	527	1601	1601	1201	801	-	515
62	16.7	Q(Btu/h)	27072	27072	20304	13536	-	10829	25632	25632	19224	12816	-	10253	24168	24168	18126	12084	-	9667	22752	22752	17064	11376	-	9101
		W	1697	1697	1273	849	-	546	1668	1668	1251	834	-	536	1621	1621	1216	810	-	521	1582	1582	1186	791	-	508
58	14.4	Q(Btu/h)	27168	27168	20376	13584	-	10867	25680	25680	19260	12840	-	10272	24144	24144	18108	12072	-	9658	22728	22728	17046	11364	-	9091
		W	1676	1676	1257	838	-	539	1635	1635	1226	817	-	525	1595	1595	1197	798	-	513	1552	1552	1164	776	-	499
54	12.2	Q(Btu/h)	27264	27264	20448	13632	-	10906	25800	25800	19350	12900	-	10320	24288	24288	18216	12144	-	9715	22872	22872	17154	11436	-	9149
		W	1668	1668	1251	834	-	536	1631	1631	1223	815	-	524	1588	1588	1191	794	-	510	1543	1543	1157	771	-	496
50	10.0	Q(Btu/h)	27312	27312	20484	13656	-	10925	25848	25848	19386	12924	-	10339	24408	24408	18306	12204	-	9763	22968	22968	17226	11484	-	9187
		W	1646	1646	1235	823	-	529	1605	1605	1204	803	-	516	1562	1562	1172	781	-	502	1519	1519	1139	760	-	488
46	7.8	Q(Btu/h)	27360	27360	20520	13680	-	10944	25920	25920	19440	12960	-	10368	24456	24456	18342	12228	-	9782	23064	23064	17298	11532	-	9226
		W	1635	1635	1226	817	-	525	1595	1595	1197	798	-	513	1552	1552	1164	776	-	499	1509	1509	1132	755	-	485
42	5.6	Q(Btu/h)	27384	27384	20538	13692	-	10954	25920	25920	19440	12960	-	10368	24504	24504	18378	12252	-	9802	23088	23088	17316	11544	-	9235
		W	1631	1631	1223	815	-	524	1590	1590	1192	795	-	511	1543	1543	1157	771	-	496	1497	1497	1123	749	-	481
38	3.3	Q(Btu/h)	27384	27384	20538	13692	-	10954	25968	25968	19476	12984	-	10387	24552	24552	18414	12276	-	9821	23160	23160	17370	11580	-	9264
		W	1621	1621	1216	810	-	521	1578	1578	1183	789	-	507	1533	1533	1150	766	-	493	1486	1486	1114	743	-	478
34	1.1	Q(Btu/h)	27408	27408	20556	13704	-	10963	25992	25992	19494	12996	-	10397	24600	24600	18450	12300	-	9840	23208	23208	17406	11604	-	9283
		W	1615	1615	1211	808	-	519	1574	1574	1180	787	-	506	1529	1529	1147	764	-	491	1484	1484	1113	742	-	477
30	-1.1	Q(Btu/h)	27408	27408	20556	13704	-	10963	25992	25992	19494	12996	-	10397	24624	24624	18468	12312	-	9850	23232	23232	17424	11616	-	9293
		W	1615	1615	1211	808	-	519	1568	1568	1176	784	-	504	1525	1525	1144	762	-	490	1478	1478	1108	739	-	475
26	-3.3	Q(Btu/h)	27432	27432	20574	13716	-	10973	26040	26040	19530	13020	-	10416	24672	24672	18504	12336	-	9869	23304	23304	17478	11652	-	9322
		W	1611	1611	1208	806	-	518	1564	1564	1173	782	-	503	1521	1521	1141	760	-	489	1474	1474	1105	737	-	474
23	-5.0	Q(Btu/h)	27432	27432	20574	13716	-	10973	26064	26064	19548	13032	-	10426	24696	24696	18522	12348	-	9878	23352	23352	17514	11676	-	9341
		W	1607	1607	1205	804	-	517	1564	1564	1173	782	-	503	1519	1519	1139	760	-	488	1474	1474	1105	737	-	474
18	-7.8	Q(Btu/h)	27504	27504	20628	13752	-	11002	26136	26136	19602	13068	-	10454	24696	24696	18522	12348	-	9878	23472	23472	17604	11736	-	9389
		W	1601	1601	1201	801	-	515	1562	1562	1172	781	-	502	1517	1517	1138	759	-	488	1474	1474	1105	737	-	474
14	-10.0	Q(Btu/h)	27504	27504	20628	13752	-	11002	26136	26136	19602	13068	-	10454	24792	24792	18594	12396	-	9917	23496	23496	17622	11748	-	9398
		W	1605	1605	1204	803	-	516	1562	1562	1172	781	-	502	1521	1521	1141	760	-	489	1476	1476	1107	738	-	474
10	-12.2	Q(Btu/h)	27552	27552	20664	13776	-	11021	26136	26136	19602	13068	-	10454	24864	24864	18648	12432	-	9946	23568	23568	17676	11784	-	9427
		W	1603	1603	1202	802	-	515	1562	1562	1172	781	-	502	1523	1523	1142	761	-	490	1478	1478	1108	739	-	475
6	-14.4	Q(Btu/h)	27576	27576	20682	13788	-	11030	26232	26232	19674	13116	-	10493	24912	24912	18684	12456	-	9965	23592	23592	17694	11796	-	9437
		W	1603	1603	1202	802	-	515	1564	1564	1173	782	-	503	1525	1525	1144	762	-	490	1484	1484	1113	742	-	477
2	-16.7	Q(Btu/h)	27648	27648	20736	13824	-	11059	26328	26328	19746	13164	-	10531	24984	24984	18738	12492	-	9994	23760	23760	17820	11880	-	9504
		W	1601	1601	1201	801	-	515	1564	1564	1173	782	-	503	1525	1525	1144	762	-	490	1486	1486	1114	743	-	478
0	-17.8	Q(Btu/h)	27696	27696	20772	13848	-	11078	26376	26376	19782	13188	-	10550	25056	25056	18792	12528	-	10022	23760	23760	17820	11880	-	9504
		W	1601	1601	1201	801	-	515	1566	1566	1175	783	-	503	1529	1529	1147	764	-	491	1490	1490	1117	745	-	479

PEAD-A24AA8
PUZ-A24NHA8
2) HEATING

Rated
Q(Btu/h): 26000
W: 1790

Indoor D.B.			80°F / 26.7°C						70°F / 21.1°C						60°F / 15.6°C					
Outdoor W.B.			Max	Rated	75%	50%	25%	Min	Max	Rated	75%	50%	25%	Min	Max	Rated	75%	50%	25%	Min
(°F)	(°C)																			
70	21.1	Q(Btu/h)	37716	35022	26267	17511	-	12931	38864	36088	27066	18044	-	13325	40320	37440	28080	18720	-	13824
		W	3067	2451	1838	1225	-	753	2856	2282	1712	1141	-	701	2661	2127	1595	1063	-	653
65	18.3	Q(Btu/h)	35756	33202	24902	16601	-	12259	36904	34268	25701	17134	-	12653	38276	35542	26657	17771	-	13123
		W	2964	2368	1776	1184	-	728	2751	2198	1649	1099	-	675	2569	2053	1540	1027	-	631
60	15.6	Q(Btu/h)	33880	31460	23595	15730	-	11616	35028	32526	24395	16263	-	12010	36316	33722	25292	16861	-	12451
		W	2831	2263	1697	1131	-	695	2650	2118	1588	1059	-	651	2480	1982	1486	991	-	609
55	12.8	Q(Btu/h)	31920	29640	22230	14820	-	10944	33068	30706	23030	15353	-	11338	34272	31824	23868	15912	-	11750
		W	2748	2196	1647	1098	-	675	2542	2032	1524	1016	-	624	2392	1912	1434	956	-	587
50	10.0	Q(Btu/h)	29988	27846	20885	13923	-	10282	31108	28886	21665	14443	-	10666	32256	29952	22464	14976	-	11059
		W	2641	2110	1583	1055	-	648	2439	1949	1462	975	-	599	2307	1844	1383	922	-	567
47	8.3	Q(Btu/h)	28756	26702	20027	13351	-	9859	29876	27742	20807	13871	-	10243	30996	28782	21587	14391	-	10627
		W	2556	2042	1532	1021	-	628	2372	1896	1422	948	-	582	2233	1785	1338	892	-	548
42	5.6	Q(Btu/h)	26824	24908	18681	12454	-	9197	28000	26000	19500	13000	-	9600	29064	26988	20241	13494	-	9965
		W	2395	1914	1435	957	-	588	2240	1790	1343	895	-	550	2088	1668	1251	834	-	513
35	1.7	Q(Btu/h)	20636	19162	14372	9581	-	7075	22092	20514	15386	10257	-	7574	23660	21970	16478	10985	-	8112
		W	2130	1702	1277	851	-	523	1980	1582	1187	791	-	486	1841	1471	1104	736	-	452
32	0.0	Q(Btu/h)	19712	18304	13728	9152	-	6758	20860	19370	14528	9685	-	7152	21672	20124	15093	10062	-	7430
		W	2018	1613	1210	806	-	496	1859	1486	1114	743	-	457	1736	1387	1040	694	-	426
27	-2.8	Q(Btu/h)	18788	17446	13085	8723	-	6442	19740	18330	13748	9165	-	6768	20468	19006	14255	9503	-	7018
		W	1855	1482	1112	741	-	455	1693	1353	1015	677	-	416	1584	1266	949	633	-	389
22	-5.6	Q(Btu/h)	17976	16692	12519	8346	-	6163	18928	17576	13182	8788	-	6490	19656	18252	13689	9126	-	6739
		W	1720	1375	1031	687	-	422	1595	1274	956	637	-	392	1463	1169	877	584	-	359
17	-8.3	Q(Btu/h)	17360	16120	12090	8060	-	5952	18284	16978	12734	8489	-	6269	18928	17576	13182	8788	-	6490
		W	1617	1292	969	646	-	397	1510	1206	905	603	-	371	1373	1097	823	549	-	337
12	-11.1	Q(Btu/h)	16716	15522	11642	7761	-	5731	17640	16380	12285	8190	-	6048	18340	17030	12773	8515	-	6288
		W	1510	1206	905	603	-	371	1429	1142	857	571	-	351	1315	1051	788	525	-	323
5	-15.0	Q(Btu/h)	15820	14690	11018	7345	-	5424	16492	15314	11486	7657	-	5654	16912	15704	11778	7852	-	5798
		W	1375	1099	824	550	-	338	1319	1054	791	527	-	324	1219	974	730	487	-	299
2	-16.7	Q(Btu/h)	15092	14014	10511	7007	-	5174	15568	14456	10842	7228	-	5338	15904	14768	11076	7384	-	5453
		W	1319	1054	791	527	-	324	1272	1017	763	508	-	312	1180	943	707	472	-	290
-3	-19.4	Q(Btu/h)	13636	12662	9497	6331	-	4675	14084	13078	9809	6539	-	4829	14308	13286	9965	6643	-	4906
		W	1236	988	741	494	-	304	1194	954	716	477	-	293	1122	897	673	448	-	276
-8	-22.2	Q(Btu/h)	12152	11284	8463	5642	-	4166	12544	11648	8736	5824	-	4301	12684	11778	8834	5889	-	4349
		W	1156	924	693	462	-	284	1116	891	669	446	-	274	1064	850	638	425	-	261
-13	-25.0	Q(Btu/h)	10668	9906	7430	4953	-	3658	11004	10218	7664	5109	-	3773	11032	10244	7683	5122	-	3782
		W	1080	863	647	431	-	265	1035	827	620	413	-	254	1010	807	605	404	-	248

PLA-A30EA8
PUZ-A30NHA8
1) COOLING

Rated
Q(Btu/h): 30000
W: 2540

Indoor W.B.			72°F / 22.2°C						67°F / 19.4°C						64°F / 17.8°C						61°F / 16.1°C					
Outdoor D.B.			Max	Rated	75%	50%	25%	Min	Max	Rated	75%	50%	25%	Min	Max	Rated	75%	50%	25%	Min	Max	Rated	75%	50%	25%	Min
(°F)	(°C)																									
115	46.1	Q(Btu/h)	28980	28980	21735	14490	-	8694	27390	27390	20543	13695	-	8217	25830	25830	19373	12915	-	7749	24240	24240	18180	12120	-	7272
		W	3058	3058	2294	1529	-	518	2997	2997	2248	1499	-	507	2941	2941	2206	1471	-	498	2891	2891	2168	1445	-	489
110	43.3	Q(Btu/h)	29760	29760	22320	14880	-	8928	28080	28080	21060	14040	-	8424	26370	26370	19778	13185	-	7911	24870	24870	18653	12435	-	7461
		W	2921	2921	2191	1461	-	495	2868	2868	2151	1434	-	485	2817	2817	2113	1408	-	477	2766	2766	2075	1383	-	468
106	41.1	Q(Btu/h)	30420	30420	22815	15210	-	9126	28710	28710	21533	14355	-	8613	26970	26970	20228	13485	-	8091	25380	25380	19035	12690	-	7614
		W	2842	2842	2132	1421	-	481	2766	2766	2075	1383	-	468	2715	2715	2036	1358	-	460	2667	2667	2000	1334	-	452
102	38.9	Q(Btu/h)	30930	30930	23198	15465	-	9279	29250	29250	21938	14625	-	8775	27420	27420	20565	13710	-	8226	25740	25740	19305	12870	-	7722
		W	2753	2753	2065	1377	-	466	2703	2703	2027	1351	-	458	2642	2642	1981	1321	-	447	2591	2591	1943	1295	-	439
98	36.7	Q(Btu/h)	31380	31380	23535	15690	-	9414	29610	29610	22208	14805	-	8883	27870	27870	20903	13935	-	8361	26130	26130	19598	13065	-	7839
		W	2667	2667	2000	1334	-	452	2616	2616	1962	1308	-	443	2565	2565	1924	1283	-	434	2515	2515	1886	1257	-	426
94	34.4	Q(Btu/h)	31800	31800	23850	15900	-	9540	30000	30000	22500	15000	-	9000	28230	28230	21173	14115	-	8469	26490	26490	19868	13245	-	7947
		W	2591	2591	1943	1295	-	439	2540	2540	1905	1270	-	430	2494	2494	1871	1247	-	422	2433	2433	1825	1217	-	412
90	32.2	Q(Btu/h)	32250	32250	24188	16125	-	9675	30360	30360	22770	15180	-	9108	28590	28590	21443	14295	-	8577	26850	26850	20138	13425	-	8055
		W	2515	2515	1886	1257	-	426	2464	2464	1848	1232	-	417	2413	2413	1810	1207	-	409	2365	2365	1774	1182	-	400
86	30.0	Q(Btu/h)	32670	32670	24503	16335	-	9801	30810	30810	23108	15405	-	9243	28980	28980	21735	14490	-	8694	27210	27210	20408	13605	-	8163
		W	2446	2446	1835	1223	-	414	2400	2400	1800	1200	-	406	2352	2352	1764	1176	-	398	2301	2301	1726	1151	-	390
82	27.8	Q(Btu/h)	32970	32970	24728	16485	-	9891	31080	31080	23310	15540	-	9324	29190	29190	21893	14595	-	8757	27420	27420	20565	13710	-	8226
		W	2403	2403	1802	1201	-	407	2352	2352	1764	1176	-	398	2289	2289	1716	1144	-	387	2250	2250	1688	1125	-	381
78	25.6	Q(Btu/h)	33270	33270	24953	16635	-	9981	31380	31380	23535	15690	-	9414	29520	29520	22140	14760	-	8856	27660	27660	20745	13830	-	8298
		W	2344	2344	1758	1172	-	397	2299	2299	1724	1149	-	389	2248	2248	1686	1124	-	381	2192	2192	1644	1096	-	371
74	23.3	Q(Btu/h)	33420	33420	25065	16710	-	10026	31530	31530	23648	15765	-	9459	29760	29760	22320	14880	-	8928	27870	27870	20903	13935	-	8361
		W	2301	2301	1726	1151	-	390	2250	2250	1688	1125	-	381	2200	2200	1650	1100	-	372	2151	2151	1614	1076	-	364
70	21.1	Q(Btu/h)	33570	33570	25178	16785	-	10071	31650	31650	23738	15825	-	9495	29910	29910	22433	14955	-	8973	28020	28020	21015	14010	-	8406
		W	2263	2263	1697	1132	-	383	2212	2212	1659	1106	-	375	2162	2162	1621	1081	-	366	2113	2113	1585	1057	-	358
66	18.9	Q(Btu/h)	33780	33780	25335	16890	-	10134	31950	31950	23963	15975	-	9585	30060	30060	22545	15030	-	9018	28320	28320	21240	14160	-	8496
		W	2225	2225	1669	1113	-	377	2174	2174	1631	1087	-	368	2126	2126	1594	1063	-	360	2075	2075	1556	1038	-	351
62	16.7	Q(Btu/h)	33840	33840	25380	16920	-	10152	32040	32040	24030	16020	-	9612	30210	30210	22658	15105	-	9063	28440	28440	21330	14220	-	8532
		W	2200	2200	1650	1100	-	372	2162	2162	1621	1081	-	366	2101	2101	1575	1050	-	356	2050	2050	1537	1025	-	347
58	14.4	Q(Btu/h)	33960	33960	25470	16980	-	10188	32100	32100	24075	16050	-	9630	30180	30180	22635	15090	-	9054	28410	28410	21308	14205	-	8523
		W	2172	2172	1629	1086	-	368	2118	2118	1589	1059	-	359	2068	2068	1551	1034	-	350	2012	2012	1509	1006	-	341
54	12.2	Q(Btu/h)	34080	34080	25560	17040	-	10224	32250	32250	24188	16125	-	9675	30360	30360	22770	15180	-	9108	28590	28590	21443	14295	-	8577
		W	2162	2162	1621	1081	-	366	2113	2113	1585	1057	-	358	2057	2057	1543	1029	-	348	1999	1999	1499	999	-	338
50	10.0	Q(Btu/h)	34140	34140	25605	17070	-	10242	32310	32310	24233	16155	-	9693	30510	30510	22883	15255	-	9153	28710	28710	21533	14355	-	8613
		W	2134	2134	1600	1067	-	361	2080	2080	1560	1040	-	352	2024	2024	1518	1012	-	343	1969	1969	1476	984	-	333
46	7.8	Q(Btu/h)	34200	34200	25650	17100	-	10260	32400	32400	24300	16200	-	9720	30570	30570	22928	15285	-	9171	28830	28830	21623	14415	-	8649
		W	2118	2118	1589	1059	-	359	2068	2068	1551	1034	-	350	2012	2012	1509	1006	-	341	1956	1956	1467	978	-	331
42	5.6	Q(Btu/h)	34230	34230	25673	17115	-	10269	32400	32400	24300	16200	-	9720	30630	30630	22973	15315	-	9189	28860	28860	21645	14430	-	8658
		W	2113	2113	1585	1057	-	358	2060	2060	1545	1030	-	349	1999	1999	1499	999	-	338	1941	1941	1455	970	-	329
38	3.3	Q(Btu/h)	34230	34230	25673	17115	-	10269	32460	32460	24345	16230	-	9738	30690	30690	23018	15345	-	9207	28950	28950	21713	14475	-	8685
		W	2101	2101	1575	1050	-	356	2045	2045	1534	1022	-	346	1986	1986	1490	993	-	336	1925	1925	1444	963	-	326
34	1.1	Q(Btu/h)	34260	34260	25695	17130	-	10278	32490	32490	24368	16245	-	9747	30750	30750	23063	15375	-	9225	29010	29010	21758	14505	-	8703
		W	2093	2093	1570	1046	-	354	2040	2040	1530	1020	-	345	1981	1981	1486	991	-	335	1923	1923	1442	961	-	326
30	-1.1	Q(Btu/h)	34260	34260	25695	17130	-	10278	32490	32490	24368	16245	-	9747	30780	30780	23085	15390	-	9234	29040	29040	21780	14520	-	8712
		W	2093	2093	1570	1046	-	354	2032	2032	1524	1016	-	344	1976	1976	1482	988	-	335	1915	1915	1436	958	-	324
26	-3.3	Q(Btu/h)	34290	34290	25718	17145	-	10287	32550	32550	24413	16275	-	9765	30840	30840	23130	15420	-	9252	29130	29130	21848	14565	-	8739
		W	2088	2088	1566	1044	-	353	2027	2027	1520	1013	-	343	1971	1971	1478	986	-	334	1910	1910	1433	955	-	323
23	-5.0	Q(Btu/h)	34290	34290	25718	17145	-	10287	32580	32580	24435	16290	-	9774	30870	30870	23153	15435	-	9261	29190	29190	21893	14595	-	8757
		W	2083	2083	1562	1041	-	353	2027	2027	1520	1013	-	343	1969	1969	1476	984	-	333	1910	1910	1433	955	-	323
18	-7.8	Q(Btu/h)	34380	34380	25785	17190	-	10314	32670	32670	24503	16335	-	9801	30870	30870	23153	15435	-	9261	29340	29340	22005	14670	-	8802
		W	2075	2075	1556	1038	-	351	2024	2024	1518	1012	-	343	1966	1966	1474	983	-	333	1910	1910	1433	955	-	323
14	-10.0	Q(Btu/h)	34380	34380	25785	17190	-	10314	32670	32670	24503	16335	-	9801	30990	30990	23243	15495	-	9297	29370	29370	22028	14685	-	8811
		W	2080	2080	1560	1040	-	352	2024	2024	1518	1012	-	343	1971	1971	1478	986	-	334	1913	1913	1434	956	-	324
10	-12.2	Q(Btu/h)	34440	34440	25830	17220	-	10332	32670	32670	24503	16335	-	9801	31080	31080	23310	15540	-	9324	29460	29460	22095	14730	-	8838
		W	2078	2078	1558	1039	-	352	2024	2024	1518	1012	-	343	1974	1974	1480	987	-	334	1915	1915	1436	958	-	324
6	-14.4	Q(Btu/h)	34470	34470	25853	17235	-	10341	32790	32790	24593	16395	-	9837	31140	31140	23355	15570	-	9342	29490	29490	22118	14745	-	8847
		W	2078	2078	1558	1039	-	352	2027	2027	1520	1013	-	343	1976	1976	1482	988	-	335	1923	1923	1442	961	-	326
2	-16.7	Q(Btu/h)	34560	34560	25920	17280	-	10368	32910	32910	24683	16455	-	9873	31230	31230	23423	15615	-	9369	29700	29700	22275	14850	-	8910
		W	2075	2075	1556	1038	-	351	2027	2027	1520	1013	-	343	1976	1976	1482	988	-	335	1925	1925	1444	963	-	326
0	-17.8	Q(Btu/h)	34620	34620	25965	17310	-	10386	32970	32970	24728	16485	-	9891	31320	31320	23490	15660	-	9396	29700	29700	22275	14850	-	8910
		W	2075	2075	1556	1038	-	351	2029	2029	1522	1015	-	344	1981	1981	1486	991	-	335	1930	1930	1448	965	-	327

PLA-A30EA8
PUZ-A30NHA8
2) HEATING

Rated
Q(Btu/h): 32000
W: 2400

Indoor D.B.			80°F / 26.7°C						70°F / 21.1°C						60°F / 15.6°C					
Outdoor W.B.			Max	Rated	75%	50%	25%	Min	Max	Rated	75%	50%	25%	Min	Max	Rated	75%	50%	25%	Min
(°F)	(°C)																			
70	21.1	Q(Btu/h)	44451	43104	32328	21552	-	12123	45804	44416	33312	22208	-	12492	47520	46080	34560	23040	-	12960
		W	3354	3286	2464	1643	-	616	3124	3060	2295	1530	-	574	2911	2851	2138	1426	-	535
65	18.3	Q(Btu/h)	42141	40864	30648	20432	-	11493	43494	42176	31632	21088	-	11862	45111	43744	32808	21872	-	12303
		W	3241	3175	2381	1588	-	595	3009	2947	2210	1474	-	553	2810	2753	2065	1376	-	516
60	15.6	Q(Btu/h)	39930	38720	29040	19360	-	10890	41283	40032	30024	20016	-	11259	42801	41504	31128	20752	-	11673
		W	3097	3034	2275	1517	-	569	2898	2839	2129	1420	-	532	2712	2657	1993	1328	-	498
55	12.8	Q(Btu/h)	37620	36480	27360	18240	-	10260	38973	37792	28344	18896	-	10629	40392	39168	29376	19584	-	11016
		W	3006	2945	2209	1472	-	552	2781	2724	2043	1362	-	511	2617	2563	1922	1282	-	481
50	10.0	Q(Btu/h)	35343	34272	25704	17136	-	9639	36663	35552	26664	17776	-	9999	38016	36864	27648	18432	-	10368
		W	2889	2830	2122	1415	-	531	2668	2614	1960	1307	-	490	2524	2472	1854	1236	-	464
47	8.3	Q(Btu/h)	33891	32864	24648	16432	-	9243	35211	34144	25608	17072	-	9603	36531	35424	26568	17712	-	9963
		W	2795	2738	2054	1369	-	513	2595	2542	1906	1271	-	477	2443	2393	1795	1196	-	449
42	5.6	Q(Btu/h)	31614	30656	22992	15328	-	8622	33000	32000	24000	16000	-	9000	34254	33216	24912	16608	-	9342
		W	2619	2566	1924	1283	-	481	2450	2400	1800	1200	-	450	2283	2237	1678	1118	-	419
35	1.7	Q(Btu/h)	24321	23584	17688	11792	-	6633	26037	25248	18936	12624	-	7101	27885	27040	20280	13520	-	7605
		W	2330	2282	1712	1141	-	428	2166	2122	1591	1061	-	398	2014	1973	1480	986	-	370
32	0.0	Q(Btu/h)	23232	22528	16896	11264	-	6336	24585	23840	17880	11920	-	6705	25542	24768	18576	12384	-	6966
		W	2207	2162	1622	1081	-	405	2034	1992	1494	996	-	374	1899	1860	1395	930	-	349
27	-2.8	Q(Btu/h)	22143	21472	16104	10736	-	6039	23265	22560	16920	11280	-	6345	24123	23392	17544	11696	-	6579
		W	2029	1987	1490	994	-	373	1852	1814	1361	907	-	340	1732	1697	1273	848	-	318
22	-5.6	Q(Btu/h)	21186	20544	15408	10272	-	5778	22308	21632	16224	10816	-	6084	23166	22464	16848	11232	-	6318
		W	1882	1843	1382	922	-	346	1744	1709	1282	854	-	320	1600	1567	1175	784	-	294
17	-8.3	Q(Btu/h)	20460	19840	14880	9920	-	5580	21549	20896	15672	10448	-	5877	22308	21632	16224	10816	-	6084
		W	1769	1733	1300	866	-	325	1651	1618	1213	809	-	303	1502	1471	1103	736	-	276
12	-11.1	Q(Btu/h)	19701	19104	14328	9552	-	5373	20790	20160	15120	10080	-	5670	21615	20960	15720	10480	-	5895
		W	1651	1618	1213	809	-	303	1563	1531	1148	766	-	287	1438	1409	1057	704	-	264
5	-15.0	Q(Btu/h)	18645	18080	13560	9040	-	5085	19437	18848	14136	9424	-	5301	19932	19328	14496	9664	-	5436
		W	1504	1474	1105	737	-	276	1443	1414	1060	707	-	265	1333	1306	979	653	-	245
2	-16.7	Q(Btu/h)	17787	17248	12936	8624	-	4851	18348	17792	13344	8896	-	5004	18744	18176	13632	9088	-	5112
		W	1443	1414	1060	707	-	265	1392	1363	1022	682	-	256	1291	1265	949	632	-	237
-3	-19.4	Q(Btu/h)	16071	15584	11688	7792	-	4383	16599	16096	12072	8048	-	4527	16863	16352	12264	8176	-	4599
		W	1352	1325	994	662	-	248	1306	1279	959	640	-	240	1227	1202	902	601	-	225
-8	-22.2	Q(Btu/h)	14322	13888	10416	6944	-	3906	14784	14336	10752	7168	-	4032	14949	14496	10872	7248	-	4077
		W	1264	1238	929	619	-	232	1220	1195	896	598	-	224	1164	1140	855	570	-	214
-13	-25.0	Q(Btu/h)	12573	12192	9144	6096	-	3429	12969	12576	9432	6288	-	3537	13002	12608	9456	6304	-	3546
		W	1181	1157	868	578	-	217	1132	1109	832	554	-	208	1105	1082	812	541	-	203

PVA-A30AA8
PUZ-A30NHA8
1) COOLING

Rated
Q(Btu/h): 30000
W: 3020

Indoor W.B.			72°F / 22.2°C						67°F / 19.4°C						64°F / 17.8°C						61°F / 16.1°C					
Outdoor D.B.			Max	Rated	75%	50%	25%	Min	Max	Rated	75%	50%	25%	Min	Max	Rated	75%	50%	25%	Min	Max	Rated	75%	50%	25%	Min
(°F)	(°C)																									
115	46.1	Q(Btu/h)	28980	28980	21735	14490	-	9660	27390	27390	20543	13695	-	9130	25830	25830	19373	12915	-	8610	24240	24240	18180	12120	-	8080
		W	3636	3636	2727	1818	-	698	3564	3564	2673	1782	-	684	3497	3497	2623	1749	-	672	3437	3437	2578	1718	-	660
110	43.3	Q(Btu/h)	29760	29760	22320	14880	-	9920	28080	28080	21060	14040	-	9360	26370	26370	19778	13185	-	8790	24870	24870	18653	12435	-	8290
		W	3473	3473	2605	1737	-	667	3410	3410	2557	1705	-	655	3349	3349	2512	1675	-	643	3289	3289	2467	1644	-	632
106	41.1	Q(Btu/h)	30420	30420	22815	15210	-	10140	28710	28710	21533	14355	-	9570	26970	26970	20228	13485	-	8990	25380	25380	19035	12690	-	8460
		W	3379	3379	2535	1690	-	649	3289	3289	2467	1644	-	632	3228	3228	2421	1614	-	620	3171	3171	2378	1586	-	609
102	38.9	Q(Btu/h)	30930	30930	23198	15465	-	10310	29250	29250	21938	14625	-	9750	27420	27420	20565	13710	-	9140	25740	25740	19305	12870	-	8580
		W	3274	3274	2455	1637	-	629	3213	3213	2410	1607	-	617	3141	3141	2356	1570	-	603	3080	3080	2310	1540	-	592
98	36.7	Q(Btu/h)	31380	31380	23535	15690	-	10460	29610	29610	22208	14805	-	9870	27870	27870	20903	13935	-	9290	26130	26130	19598	13065	-	8710
		W	3171	3171	2378	1586	-	609	3111	3111	2333	1555	-	597	3050	3050	2288	1525	-	586	2990	2990	2242	1495	-	574
94	34.4	Q(Btu/h)	31800	31800	23850	15900	-	10600	30000	30000	22500	15000	-	10000	28230	28230	21173	14115	-	9410	26490	26490	19868	13245	-	8830
		W	3080	3080	2310	1540	-	592	3020	3020	2265	1510	-	580	2966	2966	2224	1483	-	570	2893	2893	2170	1447	-	556
90	32.2	Q(Btu/h)	32250	32250	24188	16125	-	10750	30360	30360	22770	15180	-	10120	28590	28590	21443	14295	-	9530	26850	26850	20138	13425	-	8950
		W	2990	2990	2242	1495	-	574	2929	2929	2197	1465	-	563	2869	2869	2152	1435	-	551	2812	2812	2109	1406	-	540
86	30.0	Q(Btu/h)	32670	32670	24503	16335	-	10890	30810	30810	23108	15405	-	10270	28980	28980	21735	14490	-	9660	27210	27210	20408	13605	-	9070
		W	2908	2908	2181	1454	-	559	2854	2854	2140	1427	-	548	2797	2797	2097	1398	-	537	2736	2736	2052	1368	-	525
82	27.8	Q(Btu/h)	32970	32970	24728	16485	-	10990	31080	31080	23310	15540	-	10360	29190	29190	21893	14595	-	9730	27420	27420	20565	13710	-	9140
		W	2857	2857	2143	1428	-	549	2797	2797	2097	1398	-	537	2721	2721	2041	1361	-	523	2676	2676	2007	1338	-	514
78	25.6	Q(Btu/h)	33270	33270	24953	16635	-	11090	31380	31380	23535	15690	-	10460	29520	29520	22140	14760	-	9840	27660	27660	20745	13830	-	9220
		W	2787	2787	2091	1394	-	535	2733	2733	2050	1367	-	525	2673	2673	2005	1336	-	513	2606	2606	1955	1303	-	501
74	23.3	Q(Btu/h)	33420	33420	25065	16710	-	11140	31530	31530	23648	15765	-	10510	29760	29760	22320	14880	-	9920	27870	27870	20903	13935	-	9290
		W	2736	2736	2052	1368	-	525	2676	2676	2007	1338	-	514	2615	2615	1961	1308	-	502	2558	2558	1918	1279	-	491
70	21.1	Q(Btu/h)	33570	33570	25178	16785	-	11190	31650	31650	23738	15825	-	10550	29910	29910	22433	14955	-	9970	28020	28020	21015	14010	-	9340
		W	2691	2691	2018	1345	-	517	2630	2630	1973	1315	-	505	2570	2570	1928	1285	-	494	2513	2513	1884	1256	-	483
66	18.9	Q(Btu/h)	33780	33780	25335	16890	-	11260	31950	31950	23963	15975	-	10650	30060	30060	22545	15030	-	10020	28320	28320	21240	14160	-	9440
		W	2646	2646	1984	1323	-	508	2585	2585	1939	1293	-	496	2528	2528	1896	1264	-	485	2467	2467	1851	1234	-	474
62	16.7	Q(Btu/h)	33840	33840	25380	16920	-	11280	32040	32040	24030	16020	-	10680	30210	30210	22658	15105	-	10070	28440	28440	21330	14220	-	9480
		W	2615	2615	1961	1308	-	502	2570	2570	1928	1285	-	494	2498	2498	1873	1249	-	480	2437	2437	1828	1219	-	468
58	14.4	Q(Btu/h)	33960	33960	25470	16980	-	11320	32100	32100	24075	16050	-	10700	30180	30180	22635	15090	-	10060	28410	28410	21308	14205	-	9470
		W	2582	2582	1937	1291	-	496	2519	2519	1889	1259	-	484	2458	2458	1844	1229	-	472	2392	2392	1794	1196	-	459
54	12.2	Q(Btu/h)	34080	34080	25560	17040	-	11360	32250	32250	24188	16125	-	10750	30360	30360	22770	15180	-	10120	28590	28590	21443	14295	-	9530
		W	2570	2570	1928	1285	-	494	2513	2513	1884	1256	-	483	2446	2446	1835	1223	-	470	2377	2377	1783	1188	-	456
50	10.0	Q(Btu/h)	34140	34140	25605	17070	-	11380	32310	32310	24233	16155	-	10770	30510	30510	22883	15255	-	10170	28710	28710	21533	14355	-	9570
		W	2537	2537	1903	1268	-	487	2473	2473	1855	1237	-	475	2407	2407	1805	1203	-	462	2341	2341	1755	1170	-	450
46	7.8	Q(Btu/h)	34200	34200	25650	17100	-	11400	32400	32400	24300	16200	-	10800	30570	30570	22928	15285	-	10190	28830	28830	21623	14415	-	9610
		W	2519	2519	1889	1259	-	484	2458	2458	1844	1229	-	472	2392	2392	1794	1196	-	459	2325	2325	1744	1163	-	447
42	5.6	Q(Btu/h)	34230	34230	25673	17115	-	11410	32400	32400	24300	16200	-	10800	30630	30630	22973	15315	-	10210	28860	28860	21645	14430	-	9620
		W	2513	2513	1884	1256	-	483	2449	2449	1837	1225	-	470	2377	2377	1783	1188	-	456	2307	2307	1730	1154	-	443
38	3.3	Q(Btu/h)	34230	34230	25673	17115	-	11410	32460	32460	24345	16230	-	10820	30690	30690	23018	15345	-	10230	28950	28950	21713	14475	-	9650
		W	2498	2498	1873	1249	-	480	2431	2431	1823	1216	-	467	2362	2362	1771	1181	-	454	2289	2289	1717	1145	-	440
34	1.1	Q(Btu/h)	34260	34260	25695	17130	-	11420	32490	32490	24368	16245	-	10830	30750	30750	23063	15375	-	10250	29010	29010	21758	14505	-	9670
		W	2488	2488	1866	1244	-	478	2425	2425	1819	1213	-	466	2356	2356	1767	1178	-	452	2286	2286	1715	1143	-	439
30	-1.1	Q(Btu/h)	34260	34260	25695	17130	-	11420	32490	32490	24368	16245	-	10830	30780	30780	23085	15390	-	10260	29040	29040	21780	14520	-	9680
		W	2488	2488	1866	1244	-	478	2416	2416	1812	1208	-	464	2350	2350	1762	1175	-	451	2277	2277	1708	1139	-	437
26	-3.3	Q(Btu/h)	34290	34290	25718	17145	-	11430	32550	32550	24413	16275	-	10850	30840	30840	23130	15420	-	10280	29130	29130	21848	14565	-	9710
		W	2482	2482	1862	1241	-	477	2410	2410	1807	1205	-	463	2344	2344	1758	1172	-	450	2271	2271	1703	1136	-	436
23	-5.0	Q(Btu/h)	34290	34290	25718	17145	-	11430	32580	32580	24435	16290	-	10860	30870	30870	23153	15435	-	10290	29190	29190	21893	14595	-	9730
		W	2476	2476	1857	1238	-	476	2410	2410	1807	1205	-	463	2341	2341	1755	1170	-	450	2271	2271	1703	1136	-	436
18	-7.8	Q(Btu/h)	34380	34380	25785	17190	-	11460	32670	32670	24503	16335	-	10890	30870	30870	23153	15435	-	10290	29340	29340	22005	14670	-	9780
		W	2467	2467	1851	1234	-	474	2407	2407	1805	1203	-	462	2337	2337	1753	1169	-	449	2271	2271	1703	1136	-	436
14	-10.0	Q(Btu/h)	34380	34380	25785	17190	-	11460	32670	32670	24503	16335	-	10890	30990	30990	23243	15495	-	10330	29370	29370	22028	14685	-	9790
		W	2473	2473	1855	1237	-	475	2407	2407	1805	1203	-	462	2344	2344	1758	1172	-	450	2274	2274	1706	1137	-	437
10	-12.2	Q(Btu/h)	34440	34440	25830	17220	-	11480	32670	32670	24503	16335	-	10890	31080	31080	23310	15540	-	10360	29460	29460	22095	14730	-	9820
		W	2470	2470	1853	1235	-	474	2407	2407	1805	1203	-	462	2347	2347	1760	1173	-	451	2277	2277	1708	1139	-	437
6	-14.4	Q(Btu/h)	34470	34470	25853	17235	-	11490	32790	32790	24593	16395	-	10930	31140	31140	23355	15570	-	10380	29490	29490	22118	14745	-	9830
		W	2470	2470	1853	1235	-	474	2410	2410	1807	1205	-	463	2350	2350	1762	1175	-	451	2286	2286	1715	1143	-	439
2	-16.7	Q(Btu/h)	34560	34560	25920	17280	-	11520	32910	32910	24683	16455	-	10970	31230	31230	23423	15615	-	10410	29700	29700	22275	14850	-	9900
		W	2467	2467	1851	1234	-	474	2410	2410	1807	1205	-	463	2350	2350	1762	1175	-	451	2289	2289	1717	1145	-	440
0	-17.8	Q(Btu/h)	34620	34620	25965	17310	-	11540	32970	32970	24728	16485	-	10990	31320	31320	23490	15660	-	10440	29700	29700	22275	14850	-	9900
		W	2467	2467	1851	1234	-	474	2413	2413	1810	1206	-	463	2356	2356	1767	1178	-	452	2295	2295	1721	1148	-	441

PVA-A30AA8
PUZ-A30NHA8
2) HEATING

Rated
Q(Btu/h): 32000
W: 2640

Indoor D.B.			80°F / 26.7°C						70°F / 21.1°C						60°F / 15.6°C					
Outdoor W.B.			Max	Rated	75%	50%	25%	Min	Max	Rated	75%	50%	25%	Min	Max	Rated	75%	50%	25%	Min
(°F)	(°C)																			
70	21.1	Q(Btu/h)	45798	43104	32328	21552	-	16029	47192	44416	33312	22208	-	16517	48960	46080	34560	23040	-	17136
		W	3861	3614	2711	1807	-	890	3596	3366	2525	1683	-	829	3350	3136	2352	1568	-	772
65	18.3	Q(Btu/h)	43418	40864	30648	20432	-	15196	44812	42176	31632	21088	-	15684	46478	43744	32808	21872	-	16267
		W	3731	3493	2620	1746	-	860	3463	3242	2431	1621	-	798	3235	3028	2271	1514	-	746
60	15.6	Q(Btu/h)	41140	38720	29040	19360	-	14399	42534	40032	30024	20016	-	14887	44098	41504	31128	20752	-	15434
		W	3564	3337	2503	1668	-	822	3336	3123	2342	1562	-	769	3122	2922	2192	1461	-	720
55	12.8	Q(Btu/h)	38760	36480	27360	18240	-	13566	40154	37792	28344	18896	-	14054	41616	39168	29376	19584	-	14566
		W	3460	3239	2429	1620	-	798	3201	2996	2247	1498	-	738	3012	2820	2115	1410	-	694
50	10.0	Q(Btu/h)	36414	34272	25704	17136	-	12745	37774	35552	26664	17776	-	13221	39168	36864	27648	18432	-	13709
		W	3325	3113	2334	1556	-	766	3071	2875	2156	1437	-	708	2905	2719	2039	1360	-	670
47	8.3	Q(Btu/h)	34918	32864	24648	16432	-	12221	36278	34144	25608	17072	-	12697	37638	35424	26568	17712	-	13173
		W	3218	3012	2259	1506	-	742	2986	2796	2097	1398	-	688	2812	2632	1974	1316	-	648
42	5.6	Q(Btu/h)	32572	30656	22992	15328	-	11400	34000	32000	24000	16000	-	11900	35292	33216	24912	16608	-	12352
		W	3015	2822	2117	1411	-	695	2820	2640	1980	1320	-	650	2628	2460	1845	1230	-	606
35	1.7	Q(Btu/h)	25058	23584	17688	11792	-	8770	26826	25248	18936	12624	-	9389	28730	27040	20280	13520	-	10056
		W	2682	2511	1883	1255	-	618	2493	2334	1750	1167	-	575	2318	2170	1628	1085	-	534
32	0.0	Q(Btu/h)	23936	22528	16896	11264	-	8378	25330	23840	17880	11920	-	8866	26316	24768	18576	12384	-	9211
		W	2541	2379	1784	1189	-	586	2341	2191	1643	1096	-	540	2186	2046	1535	1023	-	504
27	-2.8	Q(Btu/h)	22814	21472	16104	10736	-	7985	23970	22560	16920	11280	-	8390	24854	23392	17544	11696	-	8699
		W	2335	2186	1639	1093	-	538	2132	1996	1497	998	-	491	1994	1866	1400	933	-	460
22	-5.6	Q(Btu/h)	21828	20544	15408	10272	-	7640	22984	21632	16224	10816	-	8044	23868	22464	16848	11232	-	8354
		W	2166	2028	1521	1014	-	499	2008	1880	1410	940	-	463	1841	1724	1293	862	-	424
17	-8.3	Q(Btu/h)	21080	19840	14880	9920	-	7378	22202	20896	15672	10448	-	7771	22984	21632	16224	10816	-	8044
		W	2036	1906	1430	953	-	469	1901	1779	1335	890	-	438	1729	1618	1214	809	-	398
12	-11.1	Q(Btu/h)	20298	19104	14328	9552	-	7104	21420	20160	15120	10080	-	7497	22270	20960	15720	10480	-	7795
		W	1901	1779	1335	890	-	438	1799	1684	1263	842	-	415	1655	1550	1162	775	-	382
5	-15.0	Q(Btu/h)	19210	18080	13560	9040	-	6724	20026	18848	14136	9424	-	7009	20536	19328	14496	9664	-	7188
		W	1731	1621	1216	810	-	399	1661	1555	1166	777	-	383	1534	1436	1077	718	-	354
2	-16.7	Q(Btu/h)	18326	17248	12936	8624	-	6414	18904	17792	13344	8896	-	6616	19312	18176	13632	9088	-	6759
		W	1661	1555	1166	777	-	383	1602	1500	1125	750	-	369	1486	1391	1043	696	-	343
-3	-19.4	Q(Btu/h)	16558	15584	11688	7792	-	5795	17102	16096	12072	8048	-	5986	17374	16352	12264	8176	-	6081
		W	1557	1457	1093	729	-	359	1503	1407	1055	704	-	346	1413	1323	992	661	-	326
-8	-22.2	Q(Btu/h)	14756	13888	10416	6944	-	5165	15232	14336	10752	7168	-	5331	15402	14496	10872	7248	-	5391
		W	1455	1362	1022	681	-	335	1404	1315	986	657	-	324	1340	1254	941	627	-	309
-13	-25.0	Q(Btu/h)	12954	12192	9144	6096	-	4534	13362	12576	9432	6288	-	4677	13396	12608	9456	6304	-	4689
		W	1359	1272	954	636	-	313	1303	1220	915	610	-	300	1272	1191	893	595	-	293

PKA-A30KA8
PUZ-A30NHA8
1) COOLING

Rated
Q(Btu/h): 30000
W: 3150

Indoor W.B.			72°F / 22.2°C						67°F / 19.4°C						64°F / 17.8°C						61°F / 16.1°C					
Outdoor D.B.			Max	Rated	75%	50%	25%	Min	Max	Rated	75%	50%	25%	Min	Max	Rated	75%	50%	25%	Min	Max	Rated	75%	50%	25%	Min
(°F)	(°C)																									
115	46.1	Q(Btu/h)	28980	28980	21735	14490	-	8694	27390	27390	20543	13695	-	8217	25830	25830	19373	12915	-	7749	24240	24240	18180	12120	-	7272
		W	3793	3793	2844	1896	-	650	3717	3717	2788	1859	-	637	3648	3648	2736	1824	-	625	3585	3585	2689	1792	-	615
110	43.3	Q(Btu/h)	29760	29760	22320	14880	-	8928	28080	28080	21060	14040	-	8424	26370	26370	19778	13185	-	7911	24870	24870	18653	12435	-	7461
		W	3623	3623	2717	1811	-	621	3556	3556	2667	1778	-	610	3493	3493	2620	1747	-	599	3430	3430	2573	1715	-	588
106	41.1	Q(Btu/h)	30420	30420	22815	15210	-	9126	28710	28710	21533	14355	-	8613	26970	26970	20228	13485	-	8091	25380	25380	19035	12690	-	7614
		W	3525	3525	2644	1762	-	604	3430	3430	2573	1715	-	588	3367	3367	2526	1684	-	577	3308	3308	2481	1654	-	567
102	38.9	Q(Btu/h)	30930	30930	23198	15465	-	9279	29250	29250	21938	14625	-	8775	27420	27420	20565	13710	-	8226	25740	25740	19305	12870	-	7722
		W	3415	3415	2561	1707	-	585	3352	3352	2514	1676	-	575	3276	3276	2457	1638	-	562	3213	3213	2410	1607	-	551
98	36.7	Q(Btu/h)	31380	31380	23535	15690	-	9414	29610	29610	22208	14805	-	8883	27870	27870	20903	13935	-	8361	26130	26130	19598	13065	-	7839
		W	3308	3308	2481	1654	-	567	3245	3245	2433	1622	-	556	3182	3182	2386	1591	-	545	3119	3119	2339	1559	-	535
94	34.4	Q(Btu/h)	31800	31800	23850	15900	-	9540	30000	30000	22500	15000	-	9000	28230	28230	21173	14115	-	8469	26490	26490	19868	13245	-	7947
		W	3213	3213	2410	1607	-	551	3150	3150	2363	1575	-	540	3093	3093	2320	1547	-	530	3018	3018	2263	1509	-	517
90	32.2	Q(Btu/h)	32250	32250	24188	16125	-	9675	30360	30360	22770	15180	-	9108	28590	28590	21443	14295	-	8577	26850	26850	20138	13425	-	8055
		W	3119	3119	2339	1559	-	535	3056	3056	2292	1528	-	524	2993	2993	2244	1496	-	513	2933	2933	2199	1466	-	503
86	30.0	Q(Btu/h)	32670	32670	24503	16335	-	9801	30810	30810	23108	15405	-	9243	28980	28980	21735	14490	-	8694	27210	27210	20408	13605	-	8163
		W	3033	3033	2275	1517	-	520	2977	2977	2233	1488	-	510	2917	2917	2188	1458	-	500	2854	2854	2140	1427	-	489
82	27.8	Q(Btu/h)	32970	32970	24728	16485	-	9891	31080	31080	23310	15540	-	9324	29190	29190	21893	14595	-	8757	27420	27420	20565	13710	-	8226
		W	2980	2980	2235	1490	-	511	2917	2917	2188	1458	-	500	2838	2838	2129	1419	-	487	2791	2791	2093	1395	-	478
78	25.6	Q(Btu/h)	33270	33270	24953	16635	-	9981	31380	31380	23535	15690	-	9414	29520	29520	22140	14760	-	8856	27660	27660	20745	13830	-	8298
		W	2907	2907	2181	1454	-	498	2851	2851	2138	1425	-	489	2788	2788	2091	1394	-	478	2718	2718	2039	1359	-	466
74	23.3	Q(Btu/h)	33420	33420	25065	16710	-	10026	31530	31530	23648	15765	-	9459	29760	29760	22320	14880	-	8928	27870	27870	20903	13935	-	8361
		W	2854	2854	2140	1427	-	489	2791	2791	2093	1395	-	478	2728	2728	2046	1364	-	468	2668	2668	2001	1334	-	457
70	21.1	Q(Btu/h)	33570	33570	25178	16785	-	10071	31650	31650	23738	15825	-	9495	29910	29910	22433	14955	-	8973	28020	28020	21015	14010	-	8406
		W	2807	2807	2105	1403	-	481	2744	2744	2058	1372	-	470	2681	2681	2010	1340	-	460	2621	2621	1966	1310	-	449
66	18.9	Q(Btu/h)	33780	33780	25335	16890	-	10134	31950	31950	23963	15975	-	9585	30060	30060	22545	15030	-	9018	28320	28320	21240	14160	-	8496
		W	2759	2759	2070	1380	-	473	2696	2696	2022	1348	-	462	2637	2637	1977	1318	-	452	2574	2574	1930	1287	-	441
62	16.7	Q(Btu/h)	33840	33840	25380	16920	-	10152	32040	32040	24030	16020	-	9612	30210	30210	22658	15105	-	9063	28440	28440	21330	14220	-	8532
		W	2728	2728	2046	1364	-	468	2681	2681	2010	1340	-	460	2605	2605	1954	1303	-	447	2542	2542	1907	1271	-	436
58	14.4	Q(Btu/h)	33960	33960	25470	16980	-	10188	32100	32100	24075	16050	-	9630	30180	30180	22635	15090	-	9054	28410	28410	21308	14205	-	8523
		W	2693	2693	2020	1347	-	462	2627	2627	1970	1314	-	450	2564	2564	1923	1282	-	440	2495	2495	1871	1247	-	428
54	12.2	Q(Btu/h)	34080	34080	25560	17040	-	10224	32250	32250	24188	16125	-	9675	30360	30360	22770	15180	-	9108	28590	28590	21443	14295	-	8577
		W	2681	2681	2010	1340	-	460	2621	2621	1966	1310	-	449	2552	2552	1914	1276	-	437	2479	2479	1859	1240	-	425
50	10.0	Q(Btu/h)	34140	34140	25605	17070	-	10242	32310	32310	24233	16155	-	9693	30510	30510	22883	15255	-	9153	28710	28710	21533	14355	-	8613
		W	2646	2646	1985	1323	-	454	2580	2580	1935	1290	-	442	2511	2511	1883	1255	-	430	2441	2441	1831	1221	-	419
46	7.8	Q(Btu/h)	34200	34200	25650	17100	-	10260	32400	32400	24300	16200	-	9720	30570	30570	22928	15285	-	9171	28830	28830	21623	14415	-	8649
		W	2627	2627	1970	1314	-	450	2564	2564	1923	1282	-	440	2495	2495	1871	1247	-	428	2426	2426	1819	1213	-	416
42	5.6	Q(Btu/h)	34230	34230	25673	17115	-	10269	32400	32400	24300	16200	-	9720	30630	30630	22973	15315	-	9189	28860	28860	21645	14430	-	8658
		W	2621	2621	1966	1310	-	449	2555	2555	1916	1277	-	438	2479	2479	1859	1240	-	425	2407	2407	1805	1203	-	413
38	3.3	Q(Btu/h)	34230	34230	25673	17115	-	10269	32460	32460	24345	16230	-	9738	30690	30690	23018	15345	-	9207	28950	28950	21713	14475	-	8685
		W	2605	2605	1954	1303	-	447	2536	2536	1902	1268	-	435	2463	2463	1847	1232	-	422	2388	2388	1791	1194	-	409
34	1.1	Q(Btu/h)	34260	34260	25695	17130	-	10278	32490	32490	24368	16245	-	9747	30750	30750	23063	15375	-	9225	29010	29010	21758	14505	-	8703
		W	2596	2596	1947	1298	-	445	2529	2529	1897	1265	-	434	2457	2457	1843	1229	-	421	2385	2385	1788	1192	-	409
30	-1.1	Q(Btu/h)	34260	34260	25695	17130	-	10278	32490	32490	24368	16245	-	9747	30780	30780	23085	15390	-	9234	29040	29040	21780	14520	-	8712
		W	2596	2596	1947	1298	-	445	2520	2520	1890	1260	-	432	2451	2451	1838	1225	-	420	2375	2375	1781	1188	-	407
26	-3.3	Q(Btu/h)	34290	34290	25718	17145	-	10287	32550	32550	24413	16275	-	9765	30840	30840	23130	15420	-	9252	29130	29130	21848	14565	-	8739
		W	2589	2589	1942	1295	-	444	2514	2514	1885	1257	-	431	2444	2444	1833	1222	-	419	2369	2369	1777	1184	-	406
23	-5.0	Q(Btu/h)	34290	34290	25718	17145	-	10287	32580	32580	24435	16290	-	9774	30870	30870	23153	15435	-	9261	29190	29190	21893	14595	-	8757
		W	2583	2583	1937	1292	-	443	2514	2514	1885	1257	-	431	2441	2441	1831	1221	-	419	2369	2369	1777	1184	-	406
18	-7.8	Q(Btu/h)	34380	34380	25785	17190	-	10314	32670	32670	24503	16335	-	9801	30870	30870	23153	15435	-	9261	29340	29340	22005	14670	-	8802
		W	2574	2574	1930	1287	-	441	2511	2511	1883	1255	-	430	2438	2438	1829	1219	-	418	2369	2369	1777	1184	-	406
14	-10.0	Q(Btu/h)	34380	34380	25785	17190	-	10314	32670	32670	24503	16335	-	9801	30990	30990	23243	15495	-	9297	29370	29370	22028	14685	-	8811
		W	2580	2580	1935	1290	-	442	2511	2511	1883	1255	-	430	2444	2444	1833	1222	-	419	2372	2372	1779	1186	-	407
10	-12.2	Q(Btu/h)	34440	34440	25830	17220	-	10332	32670	32670	24503	16335	-	9801	31080	31080	23310	15540	-	9324	29460	29460	22095	14730	-	8838
		W	2577	2577	1933	1288	-	442	2511	2511	1883	1255	-	430	2448	2448	1836	1224	-	420	2375	2375	1781	1188	-	407
6	-14.4	Q(Btu/h)	34470	34470	25853	17235	-	10341	32790	32790	24593	16395	-	9837	31140	31140	23355	15570	-	9342	29490	29490	22118	14745	-	8847
		W	2577	2577	1933	1288	-	442	2514	2514	1885	1257	-	431	2451	2451	1838	1225	-	420	2385	2385	1788	1192	-	409
2	-16.7	Q(Btu/h)	34560	34560	25920	17280	-	10368	32910	32910	24683	16455	-	9873	31230	31230	23423	15615	-	9369	29700	29700	22275	14850	-	8910
		W	2574	2574	1930	1287	-	441	2514	2514	1885	1257	-	431	2451	2451	1838	1225	-	420	2388	2388	1791	1194	-	409
0	-17.8	Q(Btu/h)	34620	34620	25965	17310	-	10386	32970	32970	24728	16485	-	9891	31320	31320	23490	15660	-	9396	29700	29700	22275	14850	-	8910
		W	2574	2574	1930	1287	-	441	2517	2517	1888	1258	-	431	2457	2457	1843	1229	-	421	2394	2394	1796	1197	-	410

PKA-A30KA8
PUZ-A30NHA8
2) HEATING

Rated
Q(Btu/h): 32000
W: 2460

Indoor D.B.			80°F / 26.7°C						70°F / 21.1°C						60°F / 15.6°C					
Outdoor W.B.			Max	Rated	75%	50%	25%	Min	Max	Rated	75%	50%	25%	Min	Max	Rated	75%	50%	25%	Min
(°F)	(°C)																			
70	21.1	Q(Btu/h)	45798	43104	32328	21552	-	11988	47192	44416	33312	22208	-	12353	48960	46080	34560	23040	-	12816
		W	3587	3368	2526	1684	-	671	3341	3137	2352	1568	-	625	3113	2922	2192	1461	-	582
65	18.3	Q(Btu/h)	43418	40864	30648	20432	-	11365	44812	42176	31632	21088	-	11730	46478	43744	32808	21872	-	12166
		W	3466	3255	2441	1627	-	648	3217	3021	2266	1510	-	602	3005	2822	2116	1411	-	562
60	15.6	Q(Btu/h)	41140	38720	29040	19360	-	10769	42534	40032	30024	20016	-	11134	44098	41504	31128	20752	-	11543
		W	3312	3109	2332	1555	-	619	3099	2910	2183	1455	-	580	2900	2723	2042	1362	-	542
55	12.8	Q(Btu/h)	38760	36480	27360	18240	-	10146	40154	37792	28344	18896	-	10511	41616	39168	29376	19584	-	10894
		W	3215	3018	2264	1509	-	601	2974	2792	2094	1396	-	556	2798	2627	1970	1314	-	523
50	10.0	Q(Btu/h)	36414	34272	25704	17136	-	9532	37774	35552	26664	17776	-	9888	39168	36864	27648	18432	-	10253
		W	3089	2900	2175	1450	-	578	2853	2679	2009	1339	-	534	2699	2534	1900	1267	-	505
47	8.3	Q(Btu/h)	34918	32864	24648	16432	-	9140	36278	34144	25608	17072	-	9496	37638	35424	26568	17712	-	9852
		W	2989	2807	2105	1403	-	559	2775	2605	1954	1303	-	519	2612	2453	1839	1226	-	489
42	5.6	Q(Btu/h)	32572	30656	22992	15328	-	8526	34000	32000	24000	16000	-	8900	35292	33216	24912	16608	-	9238
		W	2801	2630	1972	1315	-	524	2620	2460	1845	1230	-	490	2442	2293	1720	1146	-	457
35	1.7	Q(Btu/h)	25058	23584	17688	11792	-	6559	26826	25248	18936	12624	-	7022	28730	27040	20280	13520	-	7521
		W	2492	2339	1755	1170	-	466	2316	2175	1631	1087	-	433	2154	2022	1517	1011	-	403
32	0.0	Q(Btu/h)	23936	22528	16896	11264	-	6266	25330	23840	17880	11920	-	6631	26316	24768	18576	12384	-	6889
		W	2361	2216	1662	1108	-	441	2175	2042	1531	1021	-	407	2031	1907	1430	953	-	380
27	-2.8	Q(Btu/h)	22814	21472	16104	10736	-	5972	23970	22560	16920	11280	-	6275	24854	23392	17544	11696	-	6506
		W	2169	2037	1528	1018	-	406	1981	1860	1395	930	-	370	1852	1739	1304	870	-	346
22	-5.6	Q(Btu/h)	21828	20544	15408	10272	-	5714	22984	21632	16224	10816	-	6016	23868	22464	16848	11232	-	6248
		W	2012	1889	1417	945	-	376	1865	1752	1314	876	-	349	1711	1606	1205	803	-	320
17	-8.3	Q(Btu/h)	21080	19840	14880	9920	-	5518	22202	20896	15672	10448	-	5812	22984	21632	16224	10816	-	6016
		W	1892	1776	1332	888	-	354	1766	1658	1244	829	-	330	1606	1508	1131	754	-	300
12	-11.1	Q(Btu/h)	20298	19104	14328	9552	-	5313	21420	20160	15120	10080	-	5607	22270	20960	15720	10480	-	5830
		W	1766	1658	1244	829	-	330	1672	1569	1177	785	-	313	1538	1444	1083	722	-	288
5	-15.0	Q(Btu/h)	19210	18080	13560	9040	-	5029	20026	18848	14136	9424	-	5242	20536	19328	14496	9664	-	5376
		W	1609	1510	1133	755	-	301	1543	1449	1087	724	-	289	1425	1338	1004	669	-	267
2	-16.7	Q(Btu/h)	18326	17248	12936	8624	-	4797	18904	17792	13344	8896	-	4948	19312	18176	13632	9088	-	5055
		W	1543	1449	1087	724	-	289	1488	1397	1048	699	-	278	1381	1296	972	648	-	258
-3	-19.4	Q(Btu/h)	16558	15584	11688	7792	-	4334	17102	16096	12072	8048	-	4477	17374	16352	12264	8176	-	4548
		W	1446	1358	1018	679	-	270	1396	1311	983	656	-	261	1313	1232	924	616	-	245
-8	-22.2	Q(Btu/h)	14756	13888	10416	6944	-	3863	15232	14336	10752	7168	-	3987	15402	14496	10872	7248	-	4032
		W	1352	1269	952	635	-	253	1305	1225	919	613	-	244	1245	1169	876	584	-	233
-13	-25.0	Q(Btu/h)	12954	12192	9144	6096	-	3391	13362	12576	9432	6288	-	3498	13396	12608	9456	6304	-	3507
		W	1263	1186	889	593	-	236	1210	1137	852	568	-	226	1182	1109	832	555	-	221

PCA-A30KA8
PUZ-A30NHA8
1) COOLING

Rated
Q(Btu/h): 30000
W: 3190

Indoor W.B.			72°F / 22.2°C						67°F / 19.4°C						64°F / 17.8°C						61°F / 16.1°C					
Outdoor D.B.			Max	Rated	75%	50%	25%	Min	Max	Rated	75%	50%	25%	Min	Max	Rated	75%	50%	25%	Min	Max	Rated	75%	50%	25%	Min
(°F)	(°C)																									
115	46.1	Q(Btu/h)	28980	28980	21735	14490	-	8694	27390	27390	20543	13695	-	8217	25830	25830	19373	12915	-	7749	24240	24240	18180	12120	-	7272
		W	3841	3841	2881	1920	-	650	3764	3764	2823	1882	-	637	3694	3694	2771	1847	-	625	3630	3630	2723	1815	-	615
110	43.3	Q(Btu/h)	29760	29760	22320	14880	-	8928	28080	28080	21060	14040	-	8424	26370	26370	19778	13185	-	7911	24870	24870	18653	12435	-	7461
		W	3669	3669	2751	1834	-	621	3602	3602	2701	1801	-	610	3538	3538	2653	1769	-	599	3474	3474	2605	1737	-	588
106	41.1	Q(Btu/h)	30420	30420	22815	15210	-	9126	28710	28710	21533	14355	-	8613	26970	26970	20228	13485	-	8091	25380	25380	19035	12690	-	7614
		W	3570	3570	2677	1785	-	604	3474	3474	2605	1737	-	588	3410	3410	2558	1705	-	577	3350	3350	2512	1675	-	567
102	38.9	Q(Btu/h)	30930	30930	23198	15465	-	9279	29250	29250	21938	14625	-	8775	27420	27420	20565	13710	-	8226	25740	25740	19305	12870	-	7722
		W	3458	3458	2593	1729	-	585	3394	3394	2546	1697	-	575	3318	3318	2488	1659	-	562	3254	3254	2440	1627	-	551
98	36.7	Q(Btu/h)	31380	31380	23535	15690	-	9414	29610	29610	22208	14805	-	8883	27870	27870	20903	13935	-	8361	26130	26130	19598	13065	-	7839
		W	3350	3350	2512	1675	-	567	3286	3286	2464	1643	-	556	3222	3222	2416	1611	-	545	3158	3158	2369	1579	-	535
94	34.4	Q(Btu/h)	31800	31800	23850	15900	-	9540	30000	30000	22500	15000	-	9000	28230	28230	21173	14115	-	8469	26490	26490	19868	13245	-	7947
		W	3254	3254	2440	1627	-	551	3190	3190	2393	1595	-	540	3133	3133	2349	1566	-	530	3056	3056	2292	1528	-	517
90	32.2	Q(Btu/h)	32250	32250	24188	16125	-	9675	30360	30360	22770	15180	-	9108	28590	28590	21443	14295	-	8577	26850	26850	20138	13425	-	8055
		W	3158	3158	2369	1579	-	535	3094	3094	2321	1547	-	524	3031	3031	2273	1515	-	513	2970	2970	2227	1485	-	503
86	30.0	Q(Btu/h)	32670	32670	24503	16335	-	9801	30810	30810	23108	15405	-	9243	28980	28980	21735	14490	-	8694	27210	27210	20408	13605	-	8163
		W	3072	3072	2304	1536	-	520	3015	3015	2261	1507	-	510	2954	2954	2215	1477	-	500	2890	2890	2168	1445	-	489
82	27.8	Q(Btu/h)	32970	32970	24728	16485	-	9891	31080	31080	23310	15540	-	9324	29190	29190	21893	14595	-	8757	27420	27420	20565	13710	-	8226
		W	3018	3018	2263	1509	-	511	2954	2954	2215	1477	-	500	2874	2874	2156	1437	-	487	2826	2826	2120	1413	-	478
78	25.6	Q(Btu/h)	33270	33270	24953	16635	-	9981	31380	31380	23535	15690	-	9414	29520	29520	22140	14760	-	8856	27660	27660	20745	13830	-	8298
		W	2944	2944	2208	1472	-	498	2887	2887	2165	1443	-	489	2823	2823	2117	1412	-	478	2753	2753	2065	1376	-	466
74	23.3	Q(Btu/h)	33420	33420	25065	16710	-	10026	31530	31530	23648	15765	-	9459	29760	29760	22320	14880	-	8928	27870	27870	20903	13935	-	8361
		W	2890	2890	2168	1445	-	489	2826	2826	2120	1413	-	478	2763	2763	2072	1381	-	468	2702	2702	2026	1351	-	457
70	21.1	Q(Btu/h)	33570	33570	25178	16785	-	10071	31650	31650	23738	15825	-	9495	29910	29910	22433	14955	-	8973	28020	28020	21015	14010	-	8406
		W	2842	2842	2132	1421	-	481	2778	2778	2084	1389	-	470	2715	2715	2036	1357	-	460	2654	2654	1991	1327	-	449
66	18.9	Q(Btu/h)	33780	33780	25335	16890	-	10134	31950	31950	23963	15975	-	9585	30060	30060	22545	15030	-	9018	28320	28320	21240	14160	-	8496
		W	2794	2794	2096	1397	-	473	2731	2731	2048	1365	-	462	2670	2670	2003	1335	-	452	2606	2606	1955	1303	-	441
62	16.7	Q(Btu/h)	33840	33840	25380	16920	-	10152	32040	32040	24030	16020	-	9612	30210	30210	22658	15105	-	9063	28440	28440	21330	14220	-	8532
		W	2763	2763	2072	1381	-	468	2715	2715	2036	1357	-	460	2638	2638	1979	1319	-	447	2574	2574	1931	1287	-	436
58	14.4	Q(Btu/h)	33960	33960	25470	16980	-	10188	32100	32100	24075	16050	-	9630	30180	30180	22635	15090	-	9054	28410	28410	21308	14205	-	8523
		W	2727	2727	2046	1364	-	462	2660	2660	1995	1330	-	450	2597	2597	1947	1298	-	440	2526	2526	1895	1263	-	428
54	12.2	Q(Btu/h)	34080	34080	25560	17040	-	10224	32250	32250	24188	16125	-	9675	30360	30360	22770	15180	-	9108	28590	28590	21443	14295	-	8577
		W	2715	2715	2036	1357	-	460	2654	2654	1991	1327	-	449	2584	2584	1938	1292	-	437	2511	2511	1883	1255	-	425
50	10.0	Q(Btu/h)	34140	34140	25605	17070	-	10242	32310	32310	24233	16155	-	9693	30510	30510	22883	15255	-	9153	28710	28710	21533	14355	-	8613
		W	2680	2680	2010	1340	-	454	2613	2613	1959	1306	-	442	2542	2542	1907	1271	-	430	2472	2472	1854	1236	-	419
46	7.8	Q(Btu/h)	34200	34200	25650	17100	-	10260	32400	32400	24300	16200	-	9720	30570	30570	22928	15285	-	9171	28830	28830	21623	14415	-	8649
		W	2660	2660	1995	1330	-	450	2597	2597	1947	1298	-	440	2526	2526	1895	1263	-	428	2456	2456	1842	1228	-	416
42	5.6	Q(Btu/h)	34230	34230	25673	17115	-	10269	32400	32400	24300	16200	-	9720	30630	30630	22973	15315	-	9189	28860	28860	21645	14430	-	8658
		W	2654	2654	1991	1327	-	449	2587	2587	1940	1294	-	438	2511	2511	1883	1255	-	425	2437	2437	1828	1219	-	413
38	3.3	Q(Btu/h)	34230	34230	25673	17115	-	10269	32460	32460	24345	16230	-	9738	30690	30690	23018	15345	-	9207	28950	28950	21713	14475	-	8685
		W	2638	2638	1979	1319	-	447	2568	2568	1926	1284	-	435	2495	2495	1871	1247	-	422	2418	2418	1814	1209	-	409
34	1.1	Q(Btu/h)	34260	34260	25695	17130	-	10278	32490	32490	24368	16245	-	9747	30750	30750	23063	15375	-	9225	29010	29010	21758	14505	-	8703
		W	2629	2629	1971	1314	-	445	2562	2562	1921	1281	-	434	2488	2488	1866	1244	-	421	2415	2415	1811	1207	-	409
30	-1.1	Q(Btu/h)	34260	34260	25695	17130	-	10278	32490	32490	24368	16245	-	9747	30780	30780	23085	15390	-	9234	29040	29040	21780	14520	-	8712
		W	2629	2629	1971	1314	-	445	2552	2552	1914	1276	-	432	2482	2482	1861	1241	-	420	2405	2405	1804	1203	-	407
26	-3.3	Q(Btu/h)	34290	34290	25718	17145	-	10287	32550	32550	24413	16275	-	9765	30840	30840	23130	15420	-	9252	29130	29130	21848	14565	-	8739
		W	2622	2622	1967	1311	-	444	2546	2546	1909	1273	-	431	2475	2475	1857	1238	-	419	2399	2399	1799	1199	-	406
23	-5.0	Q(Btu/h)	34290	34290	25718	17145	-	10287	32580	32580	24435	16290	-	9774	30870	30870	23153	15435	-	9261	29190	29190	21893	14595	-	8757
		W	2616	2616	1962	1308	-	443	2546	2546	1909	1273	-	431	2472	2472	1854	1236	-	419	2399	2399	1799	1199	-	406
18	-7.8	Q(Btu/h)	34380	34380	25785	17190	-	10314	32670	32670	24503	16335	-	9801	30870	30870	23153	15435	-	9261	29340	29340	22005	14670	-	8802
		W	2606	2606	1955	1303	-	441	2542	2542	1907	1271	-	430	2469	2469	1852	1235	-	418	2399	2399	1799	1199	-	406
14	-10.0	Q(Btu/h)	34380	34380	25785	17190	-	10314	32670	32670	24503	16335	-	9801	30990	30990	23243	15495	-	9297	29370	29370	22028	14685	-	8811
		W	2613	2613	1959	1306	-	442	2542	2542	1907	1271	-	430	2475	2475	1857	1238	-	419	2402	2402	1802	1201	-	407
10	-12.2	Q(Btu/h)	34440	34440	25830	17220	-	10332	32670	32670	24503	16335	-	9801	31080	31080	23310	15540	-	9324	29460	29460	22095	14730	-	8838
		W	2609	2609	1957	1305	-	442	2542	2542	1907	1271	-	430	2479	2479	1859	1239	-	420	2405	2405	1804	1203	-	407
6	-14.4	Q(Btu/h)	34470	34470	25853	17235	-	10341	32790	32790	24593	16395	-	9837	31140	31140	23355	15570	-	9342	29490	29490	22118	14745	-	8847
		W	2609	2609	1957	1305	-	442	2546	2546	1909	1273	-	431	2482	2482	1861	1241	-	420	2415	2415	1811	1207	-	409
2	-16.7	Q(Btu/h)	34560	34560	25920	17280	-	10368	32910	32910	24683	16455	-	9873	31230	31230	23423	15615	-	9369	29700	29700	22275	14850	-	8910
		W	2606	2606	1955	1303	-	441	2546	2546	1909	1273	-	431	2482	2482	1861	1241	-	420	2418	2418	1814	1209	-	409
0	-17.8	Q(Btu/h)	34620	34620	25965	17310	-	10386	32970	32970	24728	16485	-	9891	31320	31320	23490	15660	-	9396	29700	29700	22275	14850	-	8910
		W	2606	2606	1955	1303	-	441	2549	2549	1912	1274	-	431	2488	2488	1866	1244	-	421	2424	2424	1818	1212	-	410

PCA-A30KA8
PUZ-A30NHA8
2) HEATING

Rated
Q(Btu/h): 32000
W: 2520

Indoor D.B.			80°F / 26.7°C						70°F / 21.1°C						60°F / 15.6°C					
Outdoor W.B.			Max	Rated	75%	50%	25%	Min	Max	Rated	75%	50%	25%	Min	Max	Rated	75%	50%	25%	Min
(°F)	(°C)																			
70	21.1	Q(Btu/h)	45798	43104	32328	21552	-	11584	47192	44416	33312	22208	-	11937	48960	46080	34560	23040	-	12384
		W	4107	3450	2587	1725	-	685	3825	3213	2410	1607	-	638	3564	2994	2245	1497	-	594
65	18.3	Q(Btu/h)	43418	40864	30648	20432	-	10982	44812	42176	31632	21088	-	11335	46478	43744	32808	21872	-	11756
		W	3969	3334	2500	1667	-	662	3684	3095	2321	1547	-	614	3441	2890	2168	1445	-	574
60	15.6	Q(Btu/h)	41140	38720	29040	19360	-	10406	42534	40032	30024	20016	-	10759	44098	41504	31128	20752	-	11154
		W	3792	3185	2389	1593	-	632	3549	2981	2236	1491	-	592	3321	2790	2092	1395	-	554
55	12.8	Q(Btu/h)	38760	36480	27360	18240	-	9804	40154	37792	28344	18896	-	10157	41616	39168	29376	19584	-	10526
		W	3681	3092	2319	1546	-	614	3405	2860	2145	1430	-	568	3204	2691	2019	1346	-	534
50	10.0	Q(Btu/h)	36414	34272	25704	17136	-	9211	37774	35552	26664	17776	-	9555	39168	36864	27648	18432	-	9907
		W	3537	2971	2228	1486	-	590	3267	2744	2058	1372	-	545	3090	2596	1947	1298	-	515
47	8.3	Q(Btu/h)	34918	32864	24648	16432	-	8832	36278	34144	25608	17072	-	9176	37638	35424	26568	17712	-	9520
		W	3423	2875	2156	1438	-	571	3177	2669	2002	1334	-	530	2991	2512	1884	1256	-	499
42	5.6	Q(Btu/h)	32572	30656	22992	15328	-	8239	34000	32000	24000	16000	-	8600	35292	33216	24912	16608	-	8927
		W	3207	2694	2020	1347	-	535	3000	2520	1890	1260	-	500	2796	2349	1761	1174	-	466
35	1.7	Q(Btu/h)	25058	23584	17688	11792	-	6338	26826	25248	18936	12624	-	6785	28730	27040	20280	13520	-	7267
		W	2853	2397	1797	1198	-	476	2652	2228	1671	1114	-	442	2466	2071	1554	1036	-	411
32	0.0	Q(Btu/h)	23936	22528	16896	11264	-	6054	25330	23840	17880	11920	-	6407	26316	24768	18576	12384	-	6656
		W	2703	2271	1703	1135	-	451	2490	2092	1569	1046	-	415	2325	1953	1465	977	-	388
27	-2.8	Q(Btu/h)	22814	21472	16104	10736	-	5771	23970	22560	16920	11280	-	6063	24854	23392	17544	11696	-	6287
		W	2484	2087	1565	1043	-	414	2268	1905	1429	953	-	378	2121	1782	1336	891	-	354
22	-5.6	Q(Btu/h)	21828	20544	15408	10272	-	5521	22984	21632	16224	10816	-	5814	23868	22464	16848	11232	-	6037
		W	2304	1935	1452	968	-	384	2136	1794	1346	897	-	356	1959	1646	1234	823	-	327
17	-8.3	Q(Btu/h)	21080	19840	14880	9920	-	5332	22202	20896	15672	10448	-	5616	22984	21632	16224	10816	-	5814
		W	2166	1819	1365	910	-	361	2022	1698	1274	849	-	337	1839	1545	1159	772	-	307
12	-11.1	Q(Btu/h)	20298	19104	14328	9552	-	5134	21420	20160	15120	10080	-	5418	22270	20960	15720	10480	-	5633
		W	2022	1698	1274	849	-	337	1914	1608	1206	804	-	319	1761	1479	1109	740	-	294
5	-15.0	Q(Btu/h)	19210	18080	13560	9040	-	4859	20026	18848	14136	9424	-	5065	20536	19328	14496	9664	-	5194
		W	1842	1547	1160	774	-	307	1767	1484	1113	742	-	295	1632	1371	1028	685	-	272
2	-16.7	Q(Btu/h)	18326	17248	12936	8624	-	4635	18904	17792	13344	8896	-	4782	19312	18176	13632	9088	-	4885
		W	1767	1484	1113	742	-	295	1704	1431	1074	716	-	284	1581	1328	996	664	-	264
-3	-19.4	Q(Btu/h)	16558	15584	11688	7792	-	4188	17102	16096	12072	8048	-	4326	17374	16352	12264	8176	-	4395
		W	1656	1391	1043	696	-	276	1599	1343	1007	672	-	267	1503	1263	947	631	-	251
-8	-22.2	Q(Btu/h)	14756	13888	10416	6944	-	3732	15232	14336	10752	7168	-	3853	15402	14496	10872	7248	-	3896
		W	1548	1300	975	650	-	258	1494	1255	941	627	-	249	1425	1197	898	599	-	238
-13	-25.0	Q(Btu/h)	12954	12192	9144	6096	-	3277	13362	12576	9432	6288	-	3380	13396	12608	9456	6304	-	3388
		W	1446	1215	911	607	-	241	1386	1164	873	582	-	231	1353	1137	852	568	-	226

PEAD-A30AA8
PUZ-A30NHA8
1) COOLING

Rated
Q(Btu/h): 30000
W: 2960

Indoor W.B.			72°F / 22.2°C						67°F / 19.4°C						64°F / 17.8°C						61°F / 16.1°C					
Outdoor D.B.			Max	Rated	75%	50%	25%	Min	Max	Rated	75%	50%	25%	Min	Max	Rated	75%	50%	25%	Min	Max	Rated	75%	50%	25%	Min
(°F)	(°C)																									
115	46.1	Q(Btu/h)	28980	28980	21735	14490	-	8404	27390	27390	20543	13695	-	7943	25830	25830	19373	12915	-	7491	24240	24240	18180	12120	-	7030
		W	3564	3564	2673	1782	-	674	3493	3493	2620	1746	-	661	3428	3428	2571	1714	-	648	3368	3368	2526	1684	-	637
110	43.3	Q(Btu/h)	29760	29760	22320	14880	-	8630	28080	28080	21060	14040	-	8143	26370	26370	19778	13185	-	7647	24870	24870	18653	12435	-	7212
		W	3404	3404	2553	1702	-	644	3342	3342	2506	1671	-	632	3283	3283	2462	1641	-	621	3223	3223	2418	1612	-	610
106	41.1	Q(Btu/h)	30420	30420	22815	15210	-	8822	28710	28710	21533	14355	-	8326	26970	26970	20228	13485	-	7821	25380	25380	19035	12690	-	7360
		W	3312	3312	2484	1656	-	627	3223	3223	2418	1612	-	610	3164	3164	2373	1582	-	599	3108	3108	2331	1554	-	588
102	38.9	Q(Btu/h)	30930	30930	23198	15465	-	8970	29250	29250	21938	14625	-	8483	27420	27420	20565	13710	-	7952	25740	25740	19305	12870	-	7465
		W	3209	3209	2406	1604	-	607	3149	3149	2362	1575	-	596	3078	3078	2309	1539	-	582	3019	3019	2264	1510	-	571
98	36.7	Q(Btu/h)	31380	31380	23535	15690	-	9100	29610	29610	22208	14805	-	8587	27870	27870	20903	13935	-	8082	26130	26130	19598	13065	-	7578
		W	3108	3108	2331	1554	-	588	3049	3049	2287	1524	-	577	2990	2990	2242	1495	-	566	2930	2930	2198	1465	-	554
94	34.4	Q(Btu/h)	31800	31800	23850	15900	-	9222	30000	30000	22500	15000	-	8700	28230	28230	21173	14115	-	8187	26490	26490	19868	13245	-	7682
		W	3019	3019	2264	1510	-	571	2960	2960	2220	1480	-	560	2907	2907	2180	1453	-	550	2836	2836	2127	1418	-	536
90	32.2	Q(Btu/h)	32250	32250	24188	16125	-	9353	30360	30360	22770	15180	-	8804	28590	28590	21443	14295	-	8291	26850	26850	20138	13425	-	7787
		W	2930	2930	2198	1465	-	554	2871	2871	2153	1436	-	543	2812	2812	2109	1406	-	532	2756	2756	2067	1378	-	521
86	30.0	Q(Btu/h)	32670	32670	24503	16335	-	9474	30810	30810	23108	15405	-	8935	28980	28980	21735	14490	-	8404	27210	27210	20408	13605	-	7891
		W	2850	2850	2138	1425	-	539	2797	2797	2098	1399	-	529	2741	2741	2056	1370	-	519	2682	2682	2011	1341	-	507
82	27.8	Q(Btu/h)	32970	32970	24728	16485	-	9561	31080	31080	23310	15540	-	9013	29190	29190	21893	14595	-	8465	27420	27420	20565	13710	-	7952
		W	2800	2800	2100	1400	-	530	2741	2741	2056	1370	-	519	2667	2667	2000	1333	-	505	2623	2623	1967	1311	-	496
78	25.6	Q(Btu/h)	33270	33270	24953	16635	-	9648	31380	31380	23535	15690	-	9100	29520	29520	22140	14760	-	8561	27660	27660	20745	13830	-	8021
		W	2732	2732	2049	1366	-	517	2679	2679	2009	1339	-	507	2620	2620	1965	1310	-	496	2554	2554	1916	1277	-	483
74	23.3	Q(Btu/h)	33420	33420	25065	16710	-	9692	31530	31530	23648	15765	-	9144	29760	29760	22320	14880	-	8630	27870	27870	20903	13935	-	8082
		W	2682	2682	2011	1341	-	507	2623	2623	1967	1311	-	496	2563	2563	1923	1282	-	485	2507	2507	1880	1254	-	474
70	21.1	Q(Btu/h)	33570	33570	25178	16785	-	9735	31650	31650	23738	15825	-	9179	29910	29910	22433	14955	-	8674	28020	28020	21015	14010	-	8126
		W	2637	2637	1978	1319	-	499	2578	2578	1934	1289	-	488	2519	2519	1889	1259	-	477	2463	2463	1847	1231	-	466
66	18.9	Q(Btu/h)	33780	33780	25335	16890	-	9796	31950	31950	23963	15975	-	9266	30060	30060	22545	15030	-	8717	28320	28320	21240	14160	-	8213
		W	2593	2593	1945	1296	-	491	2534	2534	1900	1267	-	479	2478	2478	1858	1239	-	469	2418	2418	1814	1209	-	458
62	16.7	Q(Btu/h)	33840	33840	25380	16920	-	9814	32040	32040	24030	16020	-	9292	30210	30210	22658	15105	-	8761	28440	28440	21330	14220	-	8248
		W	2563	2563	1923	1282	-	485	2519	2519	1889	1259	-	477	2448	2448	1836	1224	-	463	2389	2389	1792	1194	-	452
58	14.4	Q(Btu/h)	33960	33960	25470	16980	-	9848	32100	32100	24075	16050	-	9309	30180	30180	22635	15090	-	8752	28410	28410	21308	14205	-	8239
		W	2531	2531	1898	1265	-	479	2469	2469	1851	1234	-	467	2409	2409	1807	1205	-	456	2344	2344	1758	1172	-	444
54	12.2	Q(Btu/h)	34080	34080	25560	17040	-	9883	32250	32250	24188	16125	-	9353	30360	30360	22770	15180	-	8804	28590	28590	21443	14295	-	8291
		W	2519	2519	1889	1259	-	477	2463	2463	1847	1231	-	466	2398	2398	1798	1199	-	454	2330	2330	1747	1165	-	441
50	10.0	Q(Btu/h)	34140	34140	25605	17070	-	9901	32310	32310	24233	16155	-	9370	30510	30510	22883	15255	-	8848	28710	28710	21533	14355	-	8326
		W	2486	2486	1865	1243	-	470	2424	2424	1818	1212	-	459	2359	2359	1769	1180	-	446	2294	2294	1721	1147	-	434
46	7.8	Q(Btu/h)	34200	34200	25650	17100	-	9918	32400	32400	24300	16200	-	9396	30570	30570	22928	15285	-	8865	28830	28830	21623	14415	-	8361
		W	2469	2469	1851	1234	-	467	2409	2409	1807	1205	-	456	2344	2344	1758	1172	-	444	2279	2279	1709	1140	-	431
42	5.6	Q(Btu/h)	34230	34230	25673	17115	-	9927	32400	32400	24300	16200	-	9396	30630	30630	22973	15315	-	8883	28860	28860	21645	14430	-	8369
		W	2463	2463	1847	1231	-	466	2401	2401	1800	1200	-	454	2330	2330	1747	1165	-	441	2261	2261	1696	1131	-	428
38	3.3	Q(Btu/h)	34230	34230	25673	17115	-	9927	32460	32460	24345	16230	-	9413	30690	30690	23018	15345	-	8900	28950	28950	21713	14475	-	8396
		W	2448	2448	1836	1224	-	463	2383	2383	1787	1191	-	451	2315	2315	1736	1157	-	438	2244	2244	1683	1122	-	424
34	1.1	Q(Btu/h)	34260	34260	25695	17130	-	9935	32490	32490	24368	16245	-	9422	30750	30750	23063	15375	-	8918	29010	29010	21758	14505	-	8413
		W	2439	2439	1829	1220	-	461	2377	2377	1783	1188	-	450	2309	2309	1732	1154	-	437	2241	2241	1681	1120	-	424
30	-1.1	Q(Btu/h)	34260	34260	25695	17130	-	9935	32490	32490	24368	16245	-	9422	30780	30780	23085	15390	-	8926	29040	29040	21780	14520	-	8422
		W	2439	2439	1829	1220	-	461	2368	2368	1776	1184	-	448	2303	2303	1727	1151	-	436	2232	2232	1674	1116	-	422
26	-3.3	Q(Btu/h)	34290	34290	25718	17145	-	9944	32550	32550	24413	16275	-	9440	30840	30840	23130	15420	-	8944	29130	29130	21848	14565	-	8448
		W	2433	2433	1825	1217	-	460	2362	2362	1772	1181	-	447	2297	2297	1723	1148	-	435	2226	2226	1669	1113	-	421
23	-5.0	Q(Btu/h)	34290	34290	25718	17145	-	9944	32580	32580	24435	16290	-	9448	30870	30870	23153	15435	-	8952	29190	29190	21893	14595	-	8465
		W	2427	2427	1820	1214	-	459	2362	2362	1772	1181	-	447	2294	2294	1721	1147	-	434	2226	2226	1669	1113	-	421
18	-7.8	Q(Btu/h)	34380	34380	25785	17190	-	9970	32670	32670	24503	16335	-	9474	30870	30870	23153	15435	-	8952	29340	29340	22005	14670	-	8509
		W	2418	2418	1814	1209	-	458	2359	2359	1769	1180	-	446	2291	2291	1718	1146	-	433	2226	2226	1669	1113	-	421
14	-10.0	Q(Btu/h)	34380	34380	25785	17190	-	9970	32670	32670	24503	16335	-	9474	30990	30990	23243	15495	-	8987	29370	29370	22028	14685	-	8517
		W	2424	2424	1818	1212	-	459	2359	2359	1769	1180	-	446	2297	2297	1723	1148	-	435	2229	2229	1672	1114	-	422
10	-12.2	Q(Btu/h)	34440	34440	25830	17220	-	9988	32670	32670	24503	16335	-	9474	31080	31080	23310	15540	-	9013	29460	29460	22095	14730	-	8543
		W	2421	2421	1816	1211	-	458	2359	2359	1769	1180	-	446	2300	2300	1725	1150	-	435	2232	2232	1674	1116	-	422
6	-14.4	Q(Btu/h)	34470	34470	25853	17235	-	9996	32790	32790	24593	16395	-	9509	31140	31140	23355	15570	-	9031	29490	29490	22118	14745	-	8552
		W	2421	2421	1816	1211	-	458	2362	2362	1772	1181	-	447	2303	2303	1727	1151	-	436	2241	2241	1681	1120	-	424
2	-16.7	Q(Btu/h)	34560	34560	25920	17280	-	10022	32910	32910	24683	16455	-	9544	31230	31230	23423	15615	-	9057	29700	29700	22275	14850	-	8613
		W	2418	2418	1814	1209	-	458	2362	2362	1772	1181	-	447	2303	2303	1727	1151	-	436	2244	2244	1683	1122	-	424
0	-17.8	Q(Btu/h)	34620	34620	25965	17310	-	10040	32970	32970	24728	16485	-	9561	31320	31320	23490	15660	-	9083	29700	29700	22275	14850	-	8613
		W	2418	2418	1814	1209	-	458	2365	2365	1774	1183	-	447	2309	2309	1732	1154	-	437	2250	2250	1687	1125	-	426

PEAD-A30AA8
PUZ-A30NHA8
2) HEATING

Rated
Q(Btu/h): 31000
W: 2550

Indoor D.B.			80°F / 26.7°C						70°F / 21.1°C						60°F / 15.6°C					
Outdoor W.B.			Max	Rated	75%	50%	25%	Min	Max	Rated	75%	50%	25%	Min	Max	Rated	75%	50%	25%	Min
(°F)	(°C)																			
70	21.1	Q(Btu/h)	45798	41757	31318	20879	-	12392	47192	43028	32271	21514	-	12770	48960	44640	33480	22320	-	13248
		W	3573	3491	2618	1745	-	671	3328	3251	2438	1626	-	625	3101	3029	2272	1515	-	582
65	18.3	Q(Btu/h)	43418	39587	29690	19794	-	11748	44812	40858	30644	20429	-	12126	46478	42377	31783	21189	-	12576
		W	3453	3374	2530	1687	-	648	3205	3131	2349	1566	-	602	2994	2925	2194	1462	-	562
60	15.6	Q(Btu/h)	41140	37510	28133	18755	-	11132	42534	38781	29086	19391	-	11509	44098	40207	30155	20104	-	11932
		W	3299	3223	2417	1612	-	619	3088	3017	2262	1508	-	580	2889	2823	2117	1411	-	542
55	12.8	Q(Btu/h)	38760	35340	26505	17670	-	10488	40154	36611	27458	18306	-	10865	41616	37944	28458	18972	-	11261
		W	3202	3129	2347	1564	-	601	2962	2894	2171	1447	-	556	2787	2723	2043	1362	-	523
50	10.0	Q(Btu/h)	36414	33201	24901	16601	-	9853	37774	34441	25831	17221	-	10221	39168	35712	26784	17856	-	10598
		W	3077	3006	2255	1503	-	578	2842	2777	2083	1388	-	534	2688	2627	1970	1313	-	505
47	8.3	Q(Btu/h)	34918	31837	23878	15919	-	9448	36278	33077	24808	16539	-	9816	37638	34317	25738	17159	-	10184
		W	2978	2910	2182	1455	-	559	2764	2700	2025	1350	-	519	2602	2542	1907	1271	-	489
42	5.6	Q(Btu/h)	32572	29698	22274	14849	-	8814	34000	31000	23250	15500	-	9200	35292	32178	24134	16089	-	9550
		W	2790	2726	2044	1363	-	524	2610	2550	1913	1275	-	490	2433	2377	1782	1188	-	457
35	1.7	Q(Btu/h)	25058	22847	17135	11424	-	6780	26826	24459	18344	12230	-	7259	28730	26195	19646	13098	-	7774
		W	2482	2425	1819	1213	-	466	2307	2254	1691	1127	-	433	2145	2096	1572	1048	-	403
32	0.0	Q(Btu/h)	23936	21824	16368	10912	-	6477	25330	23095	17321	11548	-	6854	26316	23994	17996	11997	-	7121
		W	2352	2298	1723	1149	-	441	2166	2117	1587	1058	-	407	2023	1976	1482	988	-	380
27	-2.8	Q(Btu/h)	22814	20801	15601	10401	-	6173	23970	21855	16391	10928	-	6486	24854	22661	16996	11331	-	6725
		W	2161	2111	1584	1056	-	406	1973	1928	1446	964	-	370	1845	1803	1352	901	-	346
22	-5.6	Q(Btu/h)	21828	19902	14927	9951	-	5906	22984	20956	15717	10478	-	6219	23868	21762	16322	10881	-	6458
		W	2004	1958	1469	979	-	376	1858	1816	1362	908	-	349	1704	1665	1249	833	-	320
17	-8.3	Q(Btu/h)	21080	19220	14415	9610	-	5704	22202	20243	15182	10122	-	6008	22984	20956	15717	10478	-	6219
		W	1884	1841	1381	921	-	354	1759	1719	1289	859	-	330	1600	1563	1172	782	-	300
12	-11.1	Q(Btu/h)	20298	18507	13880	9254	-	5492	21420	19530	14648	9765	-	5796	22270	20305	15229	10153	-	6026
		W	1759	1719	1289	859	-	330	1665	1627	1220	813	-	313	1532	1497	1123	748	-	288
5	-15.0	Q(Btu/h)	19210	17515	13136	8758	-	5198	20026	18259	13694	9130	-	5419	20536	18724	14043	9362	-	5557
		W	1603	1566	1174	783	-	301	1537	1502	1126	751	-	289	1420	1387	1040	694	-	267
2	-16.7	Q(Btu/h)	18326	16709	12532	8355	-	4959	18904	17236	12927	8618	-	5115	19312	17608	13206	8804	-	5226
		W	1537	1502	1126	751	-	289	1482	1448	1086	724	-	278	1375	1344	1008	672	-	258
-3	-19.4	Q(Btu/h)	16558	15097	11323	7549	-	4480	17102	15593	11695	7797	-	4628	17374	15841	11881	7921	-	4701
		W	1441	1408	1056	704	-	270	1391	1359	1019	680	-	261	1308	1278	958	639	-	245
-8	-22.2	Q(Btu/h)	14756	13454	10091	6727	-	3993	15232	13888	10416	6944	-	4122	15402	14043	10532	7022	-	4168
		W	1347	1316	987	658	-	253	1300	1270	952	635	-	244	1240	1211	908	606	-	233
-13	-25.0	Q(Btu/h)	12954	11811	8858	5906	-	3505	13362	12183	9137	6092	-	3616	13396	12214	9161	6107	-	3625
		W	1258	1229	922	615	-	236	1206	1178	884	589	-	226	1177	1150	863	575	-	221

PLA-A36EA8
PUZ-A36NKA8
1) COOLING

Rated
Q(Btu/h): 36000
W: 2780

Indoor W.B.			72°F / 22.2°C						67°F / 19.4°C						64°F / 17.8°C						61°F / 16.1°C					
Outdoor D.B.			Max	Rated	75%	50%	25%	Min	Max	Rated	75%	50%	25%	Min	Max	Rated	75%	50%	25%	Min	Max	Rated	75%	50%	25%	Min
(°F)	(°C)																									
115	46.1	Q(Btu/h)	34776	34776	26082	17388	-	15456	32868	32868	24651	16434	-	14608	30996	30996	23247	15498	-	13776	29088	29088	21816	14544	-	12928
		W	3347	3347	2510	1674	-	1060	3280	3280	2460	1640	-	1038	3219	3219	2414	1610	-	1019	3164	3164	2373	1582	-	1001
110	43.3	Q(Btu/h)	35712	35712	26784	17856	-	15872	33696	33696	25272	16848	-	14976	31644	31644	23733	15822	-	14064	29844	29844	22383	14922	-	13264
		W	3197	3197	2398	1599	-	1012	3139	3139	2354	1569	-	994	3083	3083	2312	1542	-	976	3027	3027	2271	1514	-	958
106	41.1	Q(Btu/h)	36504	36504	27378	18252	-	16224	34452	34452	25839	17226	-	15312	32364	32364	24273	16182	-	14384	30456	30456	22842	15228	-	13536
		W	3111	3111	2333	1555	-	985	3027	3027	2271	1514	-	958	2972	2972	2229	1486	-	941	2919	2919	2189	1460	-	924
102	38.9	Q(Btu/h)	37116	37116	27837	18558	-	16496	35100	35100	26325	17550	-	15600	32904	32904	24678	16452	-	14624	30888	30888	23166	15444	-	13728
		W	3014	3014	2260	1507	-	954	2958	2958	2218	1479	-	936	2891	2891	2168	1446	-	915	2836	2836	2127	1418	-	898
98	36.7	Q(Btu/h)	37656	37656	28242	18828	-	16736	35532	35532	26649	17766	-	15792	33444	33444	25083	16722	-	14864	31356	31356	23517	15678	-	13936
		W	2919	2919	2189	1460	-	924	2863	2863	2148	1432	-	906	2808	2808	2106	1404	-	889	2752	2752	2064	1376	-	871
94	34.4	Q(Btu/h)	38160	38160	28620	19080	-	16960	36000	36000	27000	18000	-	16000	33876	33876	25407	16938	-	15056	31788	31788	23841	15894	-	14128
		W	2836	2836	2127	1418	-	898	2780	2780	2085	1390	-	880	2730	2730	2047	1365	-	864	2663	2663	1997	1332	-	843
90	32.2	Q(Btu/h)	38700	38700	29025	19350	-	17200	36432	36432	27324	18216	-	16192	34308	34308	25731	17154	-	15248	32220	32220	24165	16110	-	14320
		W	2752	2752	2064	1376	-	871	2697	2697	2022	1348	-	854	2641	2641	1981	1321	-	836	2588	2588	1941	1294	-	819
86	30.0	Q(Btu/h)	39204	39204	29403	19602	-	17424	36972	36972	27729	18486	-	16432	34776	34776	26082	17388	-	15456	32652	32652	24489	16326	-	14512
		W	2677	2677	2008	1339	-	847	2627	2627	1970	1314	-	832	2574	2574	1931	1287	-	815	2519	2519	1889	1259	-	797
82	27.8	Q(Btu/h)	39564	39564	29673	19782	-	17584	37296	37296	27972	18648	-	16576	35028	35028	26271	17514	-	15568	32904	32904	24678	16452	-	14624
		W	2630	2630	1972	1315	-	832	2574	2574	1931	1287	-	815	2505	2505	1879	1252	-	793	2463	2463	1847	1232	-	780
78	25.6	Q(Btu/h)	39924	39924	29943	19962	-	17744	37656	37656	28242	18828	-	16736	35424	35424	26568	17712	-	15744	33192	33192	24894	16596	-	14752
		W	2566	2566	1924	1283	-	812	2516	2516	1887	1258	-	796	2460	2460	1845	1230	-	779	2399	2399	1799	1200	-	759
74	23.3	Q(Btu/h)	40104	40104	30078	20052	-	17824	37836	37836	28377	18918	-	16816	35712	35712	26784	17856	-	15872	33444	33444	25083	16722	-	14864
		W	2519	2519	1889	1259	-	797	2463	2463	1847	1232	-	780	2407	2407	1806	1204	-	762	2355	2355	1766	1177	-	745
70	21.1	Q(Btu/h)	40284	40284	30213	20142	-	17904	37980	37980	28485	18990	-	16880	35892	35892	26919	17946	-	15952	33624	33624	25218	16812	-	14944
		W	2477	2477	1858	1238	-	784	2421	2421	1816	1211	-	766	2366	2366	1774	1183	-	749	2313	2313	1735	1156	-	732
66	18.9	Q(Btu/h)	40536	40536	30402	20268	-	18016	38340	38340	28755	19170	-	17040	36072	36072	27054	18036	-	16032	33984	33984	25488	16992	-	15104
		W	2435	2435	1826	1218	-	771	2380	2380	1785	1190	-	753	2327	2327	1745	1163	-	737	2271	2271	1703	1136	-	719
62	16.7	Q(Btu/h)	40608	40608	30456	20304	-	18048	38448	38448	28836	19224	-	17088	36252	36252	27189	18126	-	16112	34128	34128	25596	17064	-	15168
		W	2407	2407	1806	1204	-	762	2366	2366	1774	1183	-	749	2299	2299	1724	1150	-	728	2243	2243	1683	1122	-	710
58	14.4	Q(Btu/h)	40752	40752	30564	20376	-	18112	38520	38520	28890	19260	-	17120	36216	36216	27162	18108	-	16096	34092	34092	25569	17046	-	15152
		W	2377	2377	1783	1188	-	752	2319	2319	1739	1159	-	734	2263	2263	1697	1131	-	716	2202	2202	1651	1101	-	697
54	12.2	Q(Btu/h)	40896	40896	30672	20448	-	18176	38700	38700	29025	19350	-	17200	36432	36432	27324	18216	-	16192	34308	34308	25731	17154	-	15248
		W	2366	2366	1774	1183	-	749	2313	2313	1735	1156	-	732	2252	2252	1689	1126	-	713	2188	2188	1641	1094	-	693
50	10.0	Q(Btu/h)	40968	40968	30726	20484	-	18208	38772	38772	29079	19386	-	17232	36612	36612	27459	18306	-	16272	34452	34452	25839	17226	-	15312
		W	2335	2335	1751	1168	-	739	2277	2277	1708	1138	-	721	2216	2216	1662	1108	-	701	2155	2155	1616	1077	-	682
46	7.8	Q(Btu/h)	41040	41040	30780	20520	-	18240	38880	38880	29160	19440	-	17280	36684	36684	27513	18342	-	16304	34596	34596	25947	17298	-	15376
		W	2319	2319	1739	1159	-	734	2263	2263	1697	1131	-	716	2202	2202	1651	1101	-	697	2141	2141	1605	1070	-	678
42	5.6	Q(Btu/h)	41076	41076	30807	20538	-	18256	38880	38880	29160	19440	-	17280	36756	36756	27567	18378	-	16336	34632	34632	25974	17316	-	15392
		W	2313	2313	1735	1156	-	732	2255	2255	1691	1127	-	714	2188	2188	1641	1094	-	693	2124	2124	1593	1062	-	672
38	3.3	Q(Btu/h)	41076	41076	30807	20538	-	18256	38952	38952	29214	19476	-	17312	36828	36828	27621	18414	-	16368	34740	34740	26055	17370	-	15440
		W	2299	2299	1724	1150	-	728	2238	2238	1678	1119	-	708	2174	2174	1630	1087	-	688	2107	2107	1580	1054	-	667
34	1.1	Q(Btu/h)	41112	41112	30834	20556	-	18272	38988	38988	29241	19494	-	17328	36900	36900	27675	18450	-	16400	34812	34812	26109	17406	-	15472
		W	2291	2291	1718	1145	-	725	2232	2232	1674	1116	-	707	2168	2168	1626	1084	-	686	2104	2104	1578	1052	-	666
30	-1.1	Q(Btu/h)	41112	41112	30834	20556	-	18272	38988	38988	29241	19494	-	17328	36936	36936	27702	18468	-	16416	34848	34848	26136	17424	-	15488
		W	2291	2291	1718	1145	-	725	2224	2224	1668	1112	-	704	2163	2163	1622	1081	-	685	2096	2096	1572	1048	-	664
26	-3.3	Q(Btu/h)	41148	41148	30861	20574	-	18288	39060	39060	29295	19530	-	17360	37008	37008	27756	18504	-	16448	34956	34956	26217	17478	-	15536
		W	2285	2285	1714	1143	-	723	2218	2218	1664	1109	-	702	2157	2157	1618	1079	-	683	2091	2091	1568	1045	-	662
23	-5.0	Q(Btu/h)	41148	41148	30861	20574	-	18288	39096	39096	29322	19548	-	17376	37044	37044	27783	18522	-	16464	35028	35028	26271	17514	-	15568
		W	2280	2280	1710	1140	-	722	2218	2218	1664	1109	-	702	2155	2155	1616	1077	-	682	2091	2091	1568	1045	-	662
18	-7.8	Q(Btu/h)	41256	41256	30942	20628	-	18336	39204	39204	29403	19602	-	17424	37044	37044	27783	18522	-	16464	35208	35208	26406	17604	-	15648
		W	2271	2271	1703	1136	-	719	2216	2216	1662	1108	-	701	2152	2152	1614	1076	-	681	2091	2091	1568	1045	-	662
14	-10.0	Q(Btu/h)	41256	41256	30942	20628	-	18336	39204	39204	29403	19602	-	17424	37188	37188	27891	18594	-	16528	35244	35244	26433	17622	-	15664
		W	2277	2277	1708	1138	-	721	2216	2216	1662	1108	-	701	2157	2157	1618	1079	-	683	2093	2093	1570	1047	-	663
10	-12.2	Q(Btu/h)	41328	41328	30996	20664	-	18368	39204	39204	29403	19602	-	17424	37296	37296	27972	18648	-	16576	35352	35352	26514	17676	-	15712
		W	2274	2274	1706	1137	-	720	2216	2216	1662	1108	-	701	2160	2160	1620	1080	-	684	2096	2096	1572	1048	-	664
6	-14.4	Q(Btu/h)	41364	41364	31023	20682	-	18384	39348	39348	29511	19674	-	17488	37368	37368	28026	18684	-	16608	35388	35388	26541	17694	-	15728
		W	2274	2274	1706	1137	-	720	2218	2218	1664	1109	-	702	2163	2163	1622	1081	-	685	2104	2104	1578	1052	-	666
2	-16.7	Q(Btu/h)	41472	41472	31104	20736	-	18432	39492	39492	29619	19746	-	17552	37476	37476	28107	18738	-	16656	35640	35640	26730	17820	-	15840
		W	2271	2271	1703	1136	-	719	2218	2218	1664	1109	-	702	2163	2163	1622	1081	-	685	2107	2107	1580	1054	-	667
0	-17.8	Q(Btu/h)	41544	41544	31158	20772	-	18464	39564	39564	29673	19782	-	17584	37584	37584	28188	18792	-	16704	35640	35640	26730	17820	-	15840
		W	2271	2271	1703	1136	-	719	2221	2221	1666	1111	-	703	2168	2168	1626	1084	-	686	2113	2113	1585	1056	-	669

PLA-A36EA8
PUZ-A36NKA8
2) HEATING

Rated
Q(Btu/h): 38000
W: 2540

Indoor D.B.			80°F / 26.7°C						70°F / 21.1°C						60°F / 15.6°C					
Outdoor W.B.			Max	Rated	75%	50%	25%	Min	Max	Rated	75%	50%	25%	Min	Max	Rated	75%	50%	25%	Min
(°F)	(°C)																			
70	21.1	Q(Btu/h)	56574	51186	38390	25593	-	23977	58296	52744	39558	26372	-	24706	60480	54720	41040	27360	-	25632
		W	4134	3477	2608	1739	-	1287	3851	3239	2429	1619	-	1199	3588	3018	2263	1509	-	1117
65	18.3	Q(Btu/h)	53634	48526	36395	24263	-	22731	55356	50084	37563	25042	-	23460	57414	51946	38960	25973	-	24333
		W	3995	3360	2520	1680	-	1244	3709	3119	2339	1560	-	1154	3464	2913	2185	1457	-	1078
60	15.6	Q(Btu/h)	50820	45980	34485	22990	-	21538	52542	47538	35654	23769	-	22268	54474	49286	36965	24643	-	23087
		W	3817	3211	2408	1605	-	1188	3573	3005	2254	1502	-	1112	3343	2812	2109	1406	-	1041
55	12.8	Q(Btu/h)	47880	43320	32490	21660	-	20292	49602	44878	33659	22439	-	21022	51408	46512	34884	23256	-	21787
		W	3706	3117	2337	1558	-	1153	3428	2883	2162	1441	-	1067	3225	2713	2035	1356	-	1004
50	10.0	Q(Btu/h)	44982	40698	30524	20349	-	19064	46662	42218	31664	21109	-	19776	48384	43776	32832	21888	-	20506
		W	3561	2995	2246	1497	-	1108	3289	2766	2075	1383	-	1024	3111	2616	1962	1308	-	968
47	8.3	Q(Btu/h)	43134	39026	29270	19513	-	18281	44814	40546	30410	20273	-	18993	46494	42066	31550	21033	-	19705
		W	3446	2898	2174	1449	-	1073	3198	2690	2017	1345	-	995	3011	2532	1899	1266	-	937
42	5.6	Q(Btu/h)	40236	36404	27303	18202	-	17052	42000	38000	28500	19000	-	17800	43596	39444	29583	19722	-	18476
		W	3228	2715	2036	1358	-	1005	3020	2540	1905	1270	-	940	2815	2367	1775	1184	-	876
35	1.7	Q(Btu/h)	30954	28006	21005	14003	-	13119	33138	29982	22487	14991	-	14044	35490	32110	24083	16055	-	15041
		W	2872	2416	1812	1208	-	894	2670	2245	1684	1123	-	831	2482	2088	1566	1044	-	773
32	0.0	Q(Btu/h)	29568	26752	20064	13376	-	12531	31290	28310	21233	14155	-	13261	32508	29412	22059	14706	-	13777
		W	2721	2289	1716	1144	-	847	2507	2108	1581	1054	-	780	2341	1969	1476	984	-	729
27	-2.8	Q(Btu/h)	28182	25498	19124	12749	-	11944	29610	26790	20093	13395	-	12549	30702	27778	20834	13889	-	13012
		W	2501	2103	1577	1052	-	778	2283	1920	1440	960	-	711	2135	1796	1347	898	-	665
22	-5.6	Q(Btu/h)	26964	24396	18297	12198	-	11428	28392	25688	19266	12844	-	12033	29484	26676	20007	13338	-	12496
		W	2319	1951	1463	975	-	722	2150	1808	1356	904	-	669	1972	1659	1244	829	-	614
17	-8.3	Q(Btu/h)	26040	23560	17670	11780	-	11036	27426	24814	18611	12407	-	11623	28392	25688	19266	12844	-	12033
		W	2180	1834	1375	917	-	679	2035	1712	1284	856	-	634	1851	1557	1168	779	-	576
12	-11.1	Q(Btu/h)	25074	22686	17015	11343	-	10627	26460	23940	17955	11970	-	11214	27510	24890	18668	12445	-	11659
		W	2035	1712	1284	856	-	634	1927	1621	1215	810	-	600	1773	1491	1118	745	-	552
5	-15.0	Q(Btu/h)	23730	21470	16103	10735	-	10057	24738	22382	16787	11191	-	10484	25368	22952	17214	11476	-	10751
		W	1854	1560	1170	780	-	577	1779	1496	1122	748	-	554	1643	1382	1036	691	-	511
2	-16.7	Q(Btu/h)	22638	20482	15362	10241	-	9594	23352	21128	15846	10564	-	9897	23856	21584	16188	10792	-	10110
		W	1779	1496	1122	748	-	554	1715	1443	1082	721	-	534	1592	1339	1004	669	-	495
-3	-19.4	Q(Btu/h)	20454	18506	13880	9253	-	8669	21126	19114	14336	9557	-	8953	21462	19418	14564	9709	-	9096
		W	1667	1402	1052	701	-	519	1610	1354	1015	677	-	501	1513	1273	954	636	-	471
-8	-22.2	Q(Btu/h)	18228	16492	12369	8246	-	7725	18816	17024	12768	8512	-	7974	19026	17214	12911	8607	-	8063
		W	1558	1311	983	655	-	485	1504	1265	949	632	-	468	1435	1207	905	603	-	447
-13	-25.0	Q(Btu/h)	16002	14478	10859	7239	-	6782	16506	14934	11201	7467	-	6995	16548	14972	11229	7486	-	7013
		W	1456	1224	918	612	-	453	1395	1173	880	587	-	434	1362	1146	859	573	-	424

PVA-A36AA7
PUZ-A36NKA8
1) COOLING

Rated
Q(Btu/h): 36000
W: 3250

Indoor W.B.			72°F / 22.2°C						67°F / 19.4°C						64°F / 17.8°C						61°F / 16.1°C					
Outdoor D.B.			Max	Rated	75%	50%	25%	Min	Max	Rated	75%	50%	25%	Min	Max	Rated	75%	50%	25%	Min	Max	Rated	75%	50%	25%	Min
(°F)	(°C)																									
115	46.1	Q(Btu/h)	34776	34776	26082	17388	-	14104	32868	32868	24651	16434	-	13330	30996	30996	23247	15498	-	12571	29088	29088	21816	14544	-	11797
		W	3913	3913	2935	1957	-	1035	3835	3835	2876	1918	-	1015	3764	3764	2823	1882	-	996	3699	3699	2774	1849	-	979
110	43.3	Q(Btu/h)	35712	35712	26784	17856	-	14483	33696	33696	25272	16848	-	13666	31644	31644	23733	15822	-	12833	29844	29844	22383	14922	-	12103
		W	3738	3738	2803	1869	-	989	3669	3669	2752	1835	-	971	3604	3604	2703	1802	-	954	3539	3539	2654	1770	-	937
106	41.1	Q(Btu/h)	36504	36504	27378	18252	-	14804	34452	34452	25839	17226	-	13972	32364	32364	24273	16182	-	13125	30456	30456	22842	15228	-	12352
		W	3637	3637	2728	1818	-	962	3539	3539	2654	1770	-	937	3474	3474	2606	1737	-	919	3413	3413	2559	1706	-	903
102	38.9	Q(Btu/h)	37116	37116	27837	18558	-	15053	35100	35100	26325	17550	-	14235	32904	32904	24678	16452	-	13344	30888	30888	23166	15444	-	12527
		W	3523	3523	2642	1762	-	932	3458	3458	2594	1729	-	915	3380	3380	2535	1690	-	894	3315	3315	2486	1658	-	877
98	36.7	Q(Btu/h)	37656	37656	28242	18828	-	15272	35532	35532	26649	17766	-	14410	33444	33444	25083	16722	-	13563	31356	31356	23517	15678	-	12717
		W	3413	3413	2559	1706	-	903	3348	3348	2511	1674	-	886	3283	3283	2462	1641	-	869	3218	3218	2413	1609	-	851
94	34.4	Q(Btu/h)	38160	38160	28620	19080	-	15476	36000	36000	27000	18000	-	14600	33876	33876	25407	16938	-	13739	31788	31788	23841	15894	-	12892
		W	3315	3315	2486	1658	-	877	3250	3250	2438	1625	-	860	3192	3192	2394	1596	-	845	3114	3114	2335	1557	-	824
90	32.2	Q(Btu/h)	38700	38700	29025	19350	-	15695	36432	36432	27324	18216	-	14775	34308	34308	25731	17154	-	13914	32220	32220	24165	16110	-	13067
		W	3218	3218	2413	1609	-	851	3153	3153	2364	1576	-	834	3088	3088	2316	1544	-	817	3026	3026	2269	1513	-	801
86	30.0	Q(Btu/h)	39204	39204	29403	19602	-	15899	36972	36972	27729	18486	-	14994	34776	34776	26082	17388	-	14104	32652	32652	24489	16326	-	13242
		W	3130	3130	2347	1565	-	828	3071	3071	2303	1536	-	813	3010	3010	2257	1505	-	796	2945	2945	2208	1472	-	779
82	27.8	Q(Btu/h)	39564	39564	29673	19782	-	16045	37296	37296	27972	18648	-	15126	35028	35028	26271	17514	-	14206	32904	32904	24678	16452	-	13344
		W	3075	3075	2306	1537	-	814	3010	3010	2257	1505	-	796	2928	2928	2196	1464	-	775	2880	2880	2160	1440	-	762
78	25.6	Q(Btu/h)	39924	39924	29943	19962	-	16191	37656	37656	28242	18828	-	15272	35424	35424	26568	17712	-	14366	33192	33192	24894	16596	-	13461
		W	3000	3000	2250	1500	-	794	2941	2941	2206	1471	-	778	2876	2876	2157	1438	-	761	2805	2805	2104	1402	-	742
74	23.3	Q(Btu/h)	40104	40104	30078	20052	-	16264	37836	37836	28377	18918	-	15345	35712	35712	26784	17856	-	14483	33444	33444	25083	16722	-	13563
		W	2945	2945	2208	1472	-	779	2880	2880	2160	1440	-	762	2815	2815	2111	1407	-	745	2753	2753	2065	1376	-	728
70	21.1	Q(Btu/h)	40284	40284	30213	20142	-	16337	37980	37980	28485	18990	-	15403	35892	35892	26919	17946	-	14556	33624	33624	25218	16812	-	13636
		W	2896	2896	2172	1448	-	766	2831	2831	2123	1415	-	749	2766	2766	2074	1383	-	732	2704	2704	2028	1352	-	716
66	18.9	Q(Btu/h)	40536	40536	30402	20268	-	16440	38340	38340	28755	19170	-	15549	36072	36072	27054	18036	-	14629	33984	33984	25488	16992	-	13782
		W	2847	2847	2135	1424	-	753	2782	2782	2087	1391	-	736	2720	2720	2040	1360	-	720	2655	2655	1991	1328	-	703
62	16.7	Q(Btu/h)	40608	40608	30456	20304	-	16469	38448	38448	28836	19224	-	15593	36252	36252	27189	18126	-	14702	34128	34128	25596	17064	-	13841
		W	2815	2815	2111	1407	-	745	2766	2766	2074	1383	-	732	2688	2688	2016	1344	-	711	2623	2623	1967	1311	-	694
58	14.4	Q(Btu/h)	40752	40752	30564	20376	-	16527	38520	38520	28890	19260	-	15622	36216	36216	27162	18108	-	14688	34092	34092	25569	17046	-	13826
		W	2779	2779	2084	1389	-	735	2711	2711	2033	1355	-	717	2646	2646	1984	1323	-	700	2574	2574	1931	1287	-	681
54	12.2	Q(Btu/h)	40896	40896	30672	20448	-	16586	38700	38700	29025	19350	-	15695	36432	36432	27324	18216	-	14775	34308	34308	25731	17154	-	13914
		W	2766	2766	2074	1383	-	732	2704	2704	2028	1352	-	716	2633	2633	1974	1316	-	697	2558	2558	1918	1279	-	677
50	10.0	Q(Btu/h)	40968	40968	30726	20484	-	16615	38772	38772	29079	19386	-	15724	36612	36612	27459	18306	-	14848	34452	34452	25839	17226	-	13972
		W	2730	2730	2048	1365	-	722	2662	2662	1996	1331	-	704	2590	2590	1943	1295	-	685	2519	2519	1889	1259	-	667
46	7.8	Q(Btu/h)	41040	41040	30780	20520	-	16644	38880	38880	29160	19440	-	15768	36684	36684	27513	18342	-	14877	34596	34596	25947	17298	-	14031
		W	2711	2711	2033	1355	-	717	2646	2646	1984	1323	-	700	2574	2574	1931	1287	-	681	2503	2503	1877	1251	-	662
42	5.6	Q(Btu/h)	41076	41076	30807	20538	-	16659	38880	38880	29160	19440	-	15768	36756	36756	27567	18378	-	14907	34632	34632	25974	17316	-	14045
		W	2704	2704	2028	1352	-	716	2636	2636	1977	1318	-	697	2558	2558	1918	1279	-	677	2483	2483	1862	1242	-	657
38	3.3	Q(Btu/h)	41076	41076	30807	20538	-	16659	38952	38952	29214	19476	-	15797	36828	36828	27621	18414	-	14936	34740	34740	26055	17370	-	14089
		W	2688	2688	2016	1344	-	711	2616	2616	1962	1308	-	692	2542	2542	1906	1271	-	673	2464	2464	1848	1232	-	652
34	1.1	Q(Btu/h)	41112	41112	30834	20556	-	16673	38988	38988	29241	19494	-	15812	36900	36900	27675	18450	-	14965	34812	34812	26109	17406	-	14118
		W	2678	2678	2009	1339	-	709	2610	2610	1957	1305	-	691	2535	2535	1901	1268	-	671	2460	2460	1845	1230	-	651
30	-1.1	Q(Btu/h)	41112	41112	30834	20556	-	16673	38988	38988	29241	19494	-	15812	36936	36936	27702	18468	-	14980	34848	34848	26136	17424	-	14133
		W	2678	2678	2009	1339	-	709	2600	2600	1950	1300	-	688	2529	2529	1896	1264	-	669	2451	2451	1838	1225	-	648
26	-3.3	Q(Btu/h)	41148	41148	30861	20574	-	16688	39060	39060	29295	19530	-	15841	37008	37008	27756	18504	-	15009	34956	34956	26217	17478	-	14177
		W	2672	2672	2004	1336	-	707	2594	2594	1945	1297	-	686	2522	2522	1892	1261	-	667	2444	2444	1833	1222	-	647
23	-5.0	Q(Btu/h)	41148	41148	30861	20574	-	16688	39096	39096	29322	19548	-	15856	37044	37044	27783	18522	-	15023	35028	35028	26271	17514	-	14206
		W	2665	2665	1999	1333	-	705	2594	2594	1945	1297	-	686	2519	2519	1889	1259	-	667	2444	2444	1833	1222	-	647
18	-7.8	Q(Btu/h)	41256	41256	30942	20628	-	16732	39204	39204	29403	19602	-	15899	37044	37044	27783	18522	-	15023	35208	35208	26406	17604	-	14279
		W	2655	2655	1991	1328	-	703	2590	2590	1943	1295	-	685	2516	2516	1887	1258	-	666	2444	2444	1833	1222	-	647
14	-10.0	Q(Btu/h)	41256	41256	30942	20628	-	16732	39204	39204	29403	19602	-	15899	37188	37188	27891	18594	-	15082	35244	35244	26433	17622	-	14293
		W	2662	2662	1996	1331	-	704	2590	2590	1943	1295	-	685	2522	2522	1892	1261	-	667	2447	2447	1835	1224	-	648
10	-12.2	Q(Btu/h)	41328	41328	30996	20664	-	16761	39204	39204	29403	19602	-	15899	37296	37296	27972	18648	-	15126	35352	35352	26514	17676	-	14337
		W	2659	2659	1994	1329	-	703	2590	2590	1943	1295	-	685	2525	2525	1894	1263	-	668	2451	2451	1838	1225	-	648
6	-14.4	Q(Btu/h)	41364	41364	31023	20682	-	16775	39348	39348	29511	19674	-	15958	37368	37368	28026	18684	-	15155	35388	35388	26541	17694	-	14352
		W	2659	2659	1994	1329	-	703	2594	2594	1945	1297	-	686	2529	2529	1896	1264	-	669	2460	2460	1845	1230	-	651
2	-16.7	Q(Btu/h)	41472	41472	31104	20736	-	16819	39492	39492	29619	19746	-	16016	37476	37476	28107	18738	-	15199	35640	35640	26730	17820	-	14454
		W	2655	2655	1991	1328	-	703	2594	2594	1945	1297	-	686	2529	2529	1896	1264	-	669	2464	2464	1848	1232	-	652
0	-17.8	Q(Btu/h)	41544	41544	31158	20772	-	16848	39564	39564	29673	19782	-	16045	37584	37584	28188	18792	-	15242	35640	35640	26730	17820	-	14454
		W	2655	2655	1991	1328	-	703	2597	2597	1948	1298	-	687	2535	2535	1901	1268	-	671	2470	2470	1853	1235	-	654

PVA-A36AA7
PUZ-A36NKA8
2) HEATING

Rated
Q(Btu/h): 38000
W: 3030

Indoor D.B.			80°F / 26.7°C						70°F / 21.1°C						60°F / 15.6°C					
Outdoor W.B.			Max	Rated	75%	50%	25%	Min	Max	Rated	75%	50%	25%	Min	Max	Rated	75%	50%	25%	Min
(°F)	(°C)																			
70	21.1	Q(Btu/h)	56574	51186	38390	25593	-	23842	58296	52744	39558	26372	-	24568	60480	54720	41040	27360	-	25488
		W	4942	4148	3111	2074	-	1437	4603	3863	2897	1932	-	1339	4289	3600	2700	1800	-	1247
65	18.3	Q(Btu/h)	53634	48526	36395	24263	-	22603	55356	50084	37563	25042	-	23329	57414	51946	38960	25973	-	24196
		W	4776	4009	3007	2004	-	1389	4433	3721	2791	1860	-	1289	4141	3475	2607	1738	-	1204
60	15.6	Q(Btu/h)	50820	45980	34485	22990	-	21417	52542	47538	35654	23769	-	22143	54474	49286	36965	24643	-	22957
		W	4563	3830	2872	1915	-	1327	4271	3584	2688	1792	-	1242	3996	3354	2516	1677	-	1162
55	12.8	Q(Btu/h)	47880	43320	32490	21660	-	20178	49602	44878	33659	22439	-	20904	51408	46512	34884	23256	-	21665
		W	4429	3718	2788	1859	-	1288	4097	3439	2579	1720	-	1192	3855	3236	2427	1618	-	1121
50	10.0	Q(Btu/h)	44982	40698	30524	20349	-	18957	46662	42218	31664	21109	-	19665	48384	43776	32832	21888	-	20390
		W	4256	3572	2679	1786	-	1238	3931	3300	2475	1650	-	1143	3718	3121	2341	1560	-	1082
47	8.3	Q(Btu/h)	43134	39026	29270	19513	-	18178	44814	40546	30410	20273	-	18886	46494	42066	31550	21033	-	19594
		W	4119	3457	2593	1729	-	1198	3823	3209	2407	1604	-	1112	3599	3021	2266	1510	-	1047
42	5.6	Q(Btu/h)	40236	36404	27303	18202	-	16957	42000	38000	28500	19000	-	17700	43596	39444	29583	19722	-	18373
		W	3859	3239	2429	1620	-	1122	3610	3030	2273	1515	-	1050	3365	2824	2118	1412	-	979
35	1.7	Q(Btu/h)	30954	28006	21005	14003	-	13045	33138	29982	22487	14991	-	13965	35490	32110	24083	16055	-	14957
		W	3433	2882	2161	1441	-	999	3191	2679	2009	1339	-	928	2967	2491	1868	1245	-	863
32	0.0	Q(Btu/h)	29568	26752	20064	13376	-	12461	31290	28310	21233	14155	-	13187	32508	29412	22059	14706	-	13700
		W	3253	2730	2048	1365	-	946	2996	2515	1886	1257	-	872	2798	2348	1761	1174	-	814
27	-2.8	Q(Btu/h)	28182	25498	19124	12749	-	11877	29610	26790	20093	13395	-	12479	30702	27778	20834	13889	-	12939
		W	2989	2509	1882	1254	-	869	2729	2291	1718	1145	-	794	2552	2142	1607	1071	-	742
22	-5.6	Q(Btu/h)	26964	24396	18297	12198	-	11363	28392	25688	19266	12844	-	11965	29484	26676	20007	13338	-	12425
		W	2772	2327	1745	1164	-	806	2570	2157	1618	1079	-	748	2357	1979	1484	989	-	686
17	-8.3	Q(Btu/h)	26040	23560	17670	11780	-	10974	27426	24814	18611	12407	-	11558	28392	25688	19266	12844	-	11965
		W	2606	2188	1641	1094	-	758	2433	2042	1532	1021	-	708	2213	1857	1393	929	-	644
12	-11.1	Q(Btu/h)	25074	22686	17015	11343	-	10567	26460	23940	17955	11970	-	11151	27510	24890	18668	12445	-	11594
		W	2433	2042	1532	1021	-	708	2303	1933	1450	967	-	670	2119	1779	1334	889	-	616
5	-15.0	Q(Btu/h)	23730	21470	16103	10735	-	10001	24738	22382	16787	11191	-	10425	25368	22952	17214	11476	-	10691
		W	2217	1860	1395	930	-	645	2126	1785	1339	892	-	618	1964	1648	1236	824	-	571
2	-16.7	Q(Btu/h)	22638	20482	15362	10241	-	9540	23352	21128	15846	10564	-	9841	23856	21584	16188	10792	-	10054
		W	2126	1785	1339	892	-	618	2050	1721	1291	861	-	596	1902	1597	1198	798	-	553
-3	-19.4	Q(Btu/h)	20454	18506	13880	9253	-	8620	21126	19114	14336	9557	-	8903	21462	19418	14564	9709	-	9045
		W	1993	1673	1254	836	-	580	1924	1615	1211	807	-	560	1809	1518	1139	759	-	526
-8	-22.2	Q(Btu/h)	18228	16492	12369	8246	-	7682	18816	17024	12768	8512	-	7930	19026	17214	12911	8607	-	8018
		W	1863	1563	1173	782	-	542	1798	1509	1132	754	-	523	1715	1439	1079	720	-	499
-13	-25.0	Q(Btu/h)	16002	14478	10859	7239	-	6744	16506	14934	11201	7467	-	6956	16548	14972	11229	7486	-	6974
		W	1740	1460	1095	730	-	506	1668	1400	1050	700	-	485	1628	1367	1025	683	-	474

PKA-A36KA8
PUZ-A36NKA8
1) COOLING

Rated
Q(Btu/h): 36000
W: 3330

Indoor W.B.			72°F / 22.2°C						67°F / 19.4°C						64°F / 17.8°C						61°F / 16.1°C					
Outdoor D.B.			Max	Rated	75%	50%	25%	Min	Max	Rated	75%	50%	25%	Min	Max	Rated	75%	50%	25%	Min	Max	Rated	75%	50%	25%	Min
(°F)	(°C)																									
115	46.1	Q(Btu/h)	34776	34776	26082	17388	-	15456	32868	32868	24651	16434	-	14608	30996	30996	23247	15498	-	13776	29088	29088	21816	14544	-	12928
		W	4009	4009	3007	2005	-	1180	3929	3929	2947	1965	-	1156	3856	3856	2892	1928	-	1135	3790	3790	2842	1895	-	1115
110	43.3	Q(Btu/h)	35712	35712	26784	17856	-	15872	33696	33696	25272	16848	-	14976	31644	31644	23733	15822	-	14064	29844	29844	22383	14922	-	13264
		W	3830	3830	2872	1915	-	1127	3760	3760	2820	1880	-	1106	3693	3693	2770	1846	-	1087	3626	3626	2720	1813	-	1067
106	41.1	Q(Btu/h)	36504	36504	27378	18252	-	16224	34452	34452	25839	17226	-	15312	32364	32364	24273	16182	-	14384	30456	30456	22842	15228	-	13536
		W	3726	3726	2795	1863	-	1097	3626	3626	2720	1813	-	1067	3560	3560	2670	1780	-	1048	3497	3497	2622	1748	-	1029
102	38.9	Q(Btu/h)	37116	37116	27837	18558	-	16496	35100	35100	26325	17550	-	15600	32904	32904	24678	16452	-	14624	30888	30888	23166	15444	-	13728
		W	3610	3610	2707	1805	-	1062	3543	3543	2657	1772	-	1043	3463	3463	2597	1732	-	1019	3397	3397	2547	1698	-	1000
98	36.7	Q(Btu/h)	37656	37656	28242	18828	-	16736	35532	35532	26649	17766	-	15792	33444	33444	25083	16722	-	14864	31356	31356	23517	15678	-	13936
		W	3497	3497	2622	1748	-	1029	3430	3430	2572	1715	-	1009	3363	3363	2522	1682	-	990	3297	3297	2473	1648	-	970
94	34.4	Q(Btu/h)	38160	38160	28620	19080	-	16960	36000	36000	27000	18000	-	16000	33876	33876	25407	16938	-	15056	31788	31788	23841	15894	-	14128
		W	3397	3397	2547	1698	-	1000	3330	3330	2498	1665	-	980	3270	3270	2453	1635	-	962	3190	3190	2393	1595	-	939
90	32.2	Q(Btu/h)	38700	38700	29025	19350	-	17200	36432	36432	27324	18216	-	16192	34308	34308	25731	17154	-	15248	32220	32220	24165	16110	-	14320
		W	3297	3297	2473	1648	-	970	3230	3230	2423	1615	-	951	3164	3164	2373	1582	-	931	3100	3100	2325	1550	-	912
86	30.0	Q(Btu/h)	39204	39204	29403	19602	-	17424	36972	36972	27729	18486	-	16432	34776	34776	26082	17388	-	15456	32652	32652	24489	16326	-	14512
		W	3207	3207	2405	1603	-	944	3147	3147	2360	1573	-	926	3084	3084	2313	1542	-	907	3017	3017	2263	1508	-	888
82	27.8	Q(Btu/h)	39564	39564	29673	19782	-	17584	37296	37296	27972	18648	-	16576	35028	35028	26271	17514	-	15568	32904	32904	24678	16452	-	14624
		W	3150	3150	2363	1575	-	927	3084	3084	2313	1542	-	907	3000	3000	2250	1500	-	883	2950	2950	2213	1475	-	868
78	25.6	Q(Btu/h)	39924	39924	29943	19962	-	17744	37656	37656	28242	18828	-	16736	35424	35424	26568	17712	-	15744	33192	33192	24894	16596	-	14752
		W	3074	3074	2305	1537	-	905	3014	3014	2260	1507	-	887	2947	2947	2210	1474	-	867	2874	2874	2155	1437	-	846
74	23.3	Q(Btu/h)	40104	40104	30078	20052	-	17824	37836	37836	28377	18918	-	16816	35712	35712	26784	17856	-	15872	33444	33444	25083	16722	-	14864
		W	3017	3017	2263	1508	-	888	2950	2950	2213	1475	-	868	2884	2884	2163	1442	-	849	2821	2821	2115	1410	-	830
70	21.1	Q(Btu/h)	40284	40284	30213	20142	-	17904	37980	37980	28485	18990	-	16880	35892	35892	26919	17946	-	15952	33624	33624	25218	16812	-	14944
		W	2967	2967	2225	1484	-	873	2900	2900	2175	1450	-	854	2834	2834	2125	1417	-	834	2771	2771	2078	1385	-	815
66	18.9	Q(Btu/h)	40536	40536	30402	20268	-	18016	38340	38340	28755	19170	-	17040	36072	36072	27054	18036	-	16032	33984	33984	25488	16992	-	15104
		W	2917	2917	2188	1459	-	858	2850	2850	2138	1425	-	839	2787	2787	2090	1394	-	820	2721	2721	2040	1360	-	801
62	16.7	Q(Btu/h)	40608	40608	30456	20304	-	18048	38448	38448	28836	19224	-	17088	36252	36252	27189	18126	-	16112	34128	34128	25596	17064	-	15168
		W	2884	2884	2163	1442	-	849	2834	2834	2125	1417	-	834	2754	2754	2065	1377	-	810	2687	2687	2015	1344	-	791
58	14.4	Q(Btu/h)	40752	40752	30564	20376	-	18112	38520	38520	28890	19260	-	17120	36216	36216	27162	18108	-	16096	34092	34092	25569	17046	-	15152
		W	2847	2847	2135	1424	-	838	2777	2777	2083	1389	-	817	2711	2711	2033	1355	-	798	2637	2637	1978	1319	-	776
54	12.2	Q(Btu/h)	40896	40896	30672	20448	-	18176	38700	38700	29025	19350	-	17200	36432	36432	27324	18216	-	16192	34308	34308	25731	17154	-	15248
		W	2834	2834	2125	1417	-	834	2771	2771	2078	1385	-	815	2697	2697	2023	1349	-	794	2621	2621	1966	1310	-	771
50	10.0	Q(Btu/h)	40968	40968	30726	20484	-	18208	38772	38772	29079	19386	-	17232	36612	36612	27459	18306	-	16272	34452	34452	25839	17226	-	15312
		W	2797	2797	2098	1399	-	823	2727	2727	2045	1364	-	803	2654	2654	1991	1327	-	781	2581	2581	1936	1290	-	760
46	7.8	Q(Btu/h)	41040	41040	30780	20520	-	18240	38880	38880	29160	19440	-	17280	36684	36684	27513	18342	-	16304	34596	34596	25947	17298	-	15376
		W	2777	2777	2083	1389	-	817	2711	2711	2033	1355	-	798	2637	2637	1978	1319	-	776	2564	2564	1923	1282	-	755
42	5.6	Q(Btu/h)	41076	41076	30807	20538	-	18256	38880	38880	29160	19440	-	17280	36756	36756	27567	18378	-	16336	34632	34632	25974	17316	-	15392
		W	2771	2771	2078	1385	-	815	2701	2701	2025	1350	-	795	2621	2621	1966	1310	-	771	2544	2544	1908	1272	-	749
38	3.3	Q(Btu/h)	41076	41076	30807	20538	-	18256	38952	38952	29214	19476	-	17312	36828	36828	27621	18414	-	16368	34740	34740	26055	17370	-	15440
		W	2754	2754	2065	1377	-	810	2681	2681	2010	1340	-	789	2604	2604	1953	1302	-	766	2524	2524	1893	1262	-	743
34	1.1	Q(Btu/h)	41112	41112	30834	20556	-	18272	38988	38988	29241	19494	-	17328	36900	36900	27675	18450	-	16400	34812	34812	26109	17406	-	15472
		W	2744	2744	2058	1372	-	808	2674	2674	2005	1337	-	787	2597	2597	1948	1299	-	764	2521	2521	1891	1260	-	742
30	-1.1	Q(Btu/h)	41112	41112	30834	20556	-	18272	38988	38988	29241	19494	-	17328	36936	36936	27702	18468	-	16416	34848	34848	26136	17424	-	15488
		W	2744	2744	2058	1372	-	808	2664	2664	1998	1332	-	784	2591	2591	1943	1295	-	762	2511	2511	1883	1255	-	739
26	-3.3	Q(Btu/h)	41148	41148	30861	20574	-	18288	39060	39060	29295	19530	-	17360	37008	37008	27756	18504	-	16448	34956	34956	26217	17478	-	15536
		W	2737	2737	2053	1369	-	806	2657	2657	1993	1329	-	782	2584	2584	1938	1292	-	760	2504	2504	1878	1252	-	737
23	-5.0	Q(Btu/h)	41148	41148	30861	20574	-	18288	39096	39096	29322	19548	-	17376	37044	37044	27783	18522	-	16464	35028	35028	26271	17514	-	15568
		W	2731	2731	2048	1365	-	804	2657	2657	1993	1329	-	782	2581	2581	1936	1290	-	760	2504	2504	1878	1252	-	737
18	-7.8	Q(Btu/h)	41256	41256	30942	20628	-	18336	39204	39204	29403	19602	-	17424	37044	37044	27783	18522	-	16464	35208	35208	26406	17604	-	15648
		W	2721	2721	2040	1360	-	801	2654	2654	1991	1327	-	781	2577	2577	1933	1289	-	759	2504	2504	1878	1252	-	737
14	-10.0	Q(Btu/h)	41256	41256	30942	20628	-	18336	39204	39204	29403	19602	-	17424	37188	37188	27891	18594	-	16528	35244	35244	26433	17622	-	15664
		W	2727	2727	2045	1364	-	803	2654	2654	1991	1327	-	781	2584	2584	1938	1292	-	760	2507	2507	1881	1254	-	738
10	-12.2	Q(Btu/h)	41328	41328	30996	20664	-	18368	39204	39204	29403	19602	-	17424	37296	37296	27972	18648	-	16576	35352	35352	26514	17676	-	15712
		W	2724	2724	2043	1362	-	802	2654	2654	1991	1327	-	781	2587	2587	1941	1294	-	761	2511	2511	1883	1255	-	739
6	-14.4	Q(Btu/h)	41364	41364	31023	20682	-	18384	39348	39348	29511	19674	-	17488	37368	37368	28026	18684	-	16608	35388	35388	26541	17694	-	15728
		W	2724	2724	2043	1362	-	802	2657	2657	1993	1329	-	782	2591	2591	1943	1295	-	762	2521	2521	1891	1260	-	742
2	-16.7	Q(Btu/h)	41472	41472	31104	20736	-	18432	39492	39492	29619	19746	-	17552	37476	37476	28107	18738	-	16656	35640	35640	26730	17820	-	15840
		W	2721	2721	2040	1360	-	801	2657	2657	1993	1329	-	782	2591	2591	1943	1295	-	762	2524	2524	1893	1262	-	743
0	-17.8	Q(Btu/h)	41544	41544	31158	20772	-	18464	39564	39564	29673	19782	-	17584	37584	37584	28188	18792	-	16704	35640	35640	26730	17820	-	15840
		W	2721	2721	2040	1360	-	801	2661	2661	1996	1330	-	783	2597	2597	1948	1299	-	764	2531	2531	1898	1265	-	745

PKA-A36KA8
PUZ-A36NKA8
2) HEATING

Rated
Q(Btu/h): 38000
W: 2460

Indoor D.B.			80°F / 26.7°C						70°F / 21.1°C						60°F / 15.6°C					
Outdoor W.B.			Max	Rated	75%	50%	25%	Min	Max	Rated	75%	50%	25%	Min	Max	Rated	75%	50%	25%	Min
(°F)	(°C)																			
70	21.1	Q(Btu/h)	53880	51186	38390	25593	-	22899	55520	52744	39558	26372	-	23596	57600	54720	41040	27360	-	24480
		W	5065	3368	2526	1684	-	1383	4718	3137	2352	1568	-	1288	4396	2922	2192	1461	-	1200
65	18.3	Q(Btu/h)	51080	48526	36395	24263	-	21709	52720	50084	37563	25042	-	22406	54680	51946	38960	25973	-	23239
		W	4895	3255	2441	1627	-	1336	4544	3021	2266	1510	-	1240	4244	2822	2116	1411	-	1158
60	15.6	Q(Btu/h)	48400	45980	34485	22990	-	20570	50040	47538	35654	23769	-	21267	51880	49286	36965	24643	-	22049
		W	4677	3109	2332	1555	-	1277	4377	2910	2183	1455	-	1195	4096	2723	2042	1362	-	1118
55	12.8	Q(Btu/h)	45600	43320	32490	21660	-	19380	47240	44878	33659	22439	-	20077	48960	46512	34884	23256	-	20808
		W	4540	3018	2264	1509	-	1239	4200	2792	2094	1396	-	1146	3952	2627	1970	1314	-	1079
50	10.0	Q(Btu/h)	42840	40698	30524	20349	-	18207	44440	42218	31664	21109	-	18887	46080	43776	32832	21888	-	19584
		W	4362	2900	2175	1450	-	1191	4029	2679	2009	1339	-	1100	3811	2534	1900	1267	-	1040
47	8.3	Q(Btu/h)	41080	39026	29270	19513	-	17459	42680	40546	30410	20273	-	18139	44280	42066	31550	21033	-	18819
		W	4222	2807	2105	1403	-	1152	3918	2605	1954	1303	-	1070	3689	2453	1839	1226	-	1007
42	5.6	Q(Btu/h)	38320	36404	27303	18202	-	16286	40000	38000	28500	19000	-	17000	41520	39444	29583	19722	-	17646
		W	3955	2630	1972	1315	-	1080	3700	2460	1845	1230	-	1010	3448	2293	1720	1146	-	941
35	1.7	Q(Btu/h)	29480	28006	21005	14003	-	12529	31560	29982	22487	14991	-	13413	33800	32110	24083	16055	-	14365
		W	3519	2339	1755	1170	-	961	3271	2175	1631	1087	-	893	3041	2022	1517	1011	-	830
32	0.0	Q(Btu/h)	28160	26752	20064	13376	-	11968	29800	28310	21233	14155	-	12665	30960	29412	22059	14706	-	13158
		W	3334	2216	1662	1108	-	910	3071	2042	1531	1021	-	838	2868	1907	1430	953	-	783
27	-2.8	Q(Btu/h)	26840	25498	19124	12749	-	11407	28200	26790	20093	13395	-	11985	29240	27778	20834	13889	-	12427
		W	3064	2037	1528	1018	-	836	2797	1860	1395	930	-	764	2616	1739	1304	870	-	714
22	-5.6	Q(Btu/h)	25680	24396	18297	12198	-	10914	27040	25688	19266	12844	-	11492	28080	26676	20007	13338	-	11934
		W	2842	1889	1417	945	-	776	2634	1752	1314	876	-	719	2416	1606	1205	803	-	660
17	-8.3	Q(Btu/h)	24800	23560	17670	11780	-	10540	26120	24814	18611	12407	-	11101	27040	25688	19266	12844	-	11492
		W	2671	1776	1332	888	-	729	2494	1658	1244	829	-	681	2268	1508	1131	754	-	619
12	-11.1	Q(Btu/h)	23880	22686	17015	11343	-	10149	25200	23940	17955	11970	-	10710	26200	24890	18668	12445	-	11135
		W	2494	1658	1244	829	-	681	2361	1569	1177	785	-	644	2172	1444	1083	722	-	593
5	-15.0	Q(Btu/h)	22600	21470	16103	10735	-	9605	23560	22382	16787	11191	-	10013	24160	22952	17214	11476	-	10268
		W	2272	1510	1133	755	-	620	2179	1449	1087	724	-	595	2013	1338	1004	669	-	549
2	-16.7	Q(Btu/h)	21560	20482	15362	10241	-	9163	22240	21128	15846	10564	-	9452	22720	21584	16188	10792	-	9656
		W	2179	1449	1087	724	-	595	2102	1397	1048	699	-	574	1950	1296	972	648	-	532
-3	-19.4	Q(Btu/h)	19480	18506	13880	9253	-	8279	20120	19114	14336	9557	-	8551	20440	19418	14564	9709	-	8687
		W	2042	1358	1018	679	-	558	1972	1311	983	656	-	538	1854	1232	924	616	-	506
-8	-22.2	Q(Btu/h)	17360	16492	12369	8246	-	7378	17920	17024	12768	8512	-	7616	18120	17214	12911	8607	-	7701
		W	1909	1269	952	635	-	521	1843	1225	919	613	-	503	1758	1169	876	584	-	480
-13	-25.0	Q(Btu/h)	15240	14478	10859	7239	-	6477	15720	14934	11201	7467	-	6681	15760	14972	11229	7486	-	6698
		W	1783	1186	889	593	-	487	1709	1137	852	568	-	467	1669	1109	832	555	-	456

PCA-A36KA8
PUZ-A36NKA8
1) COOLING

Rated
Q(Btu/h): 36000
W: 3270

Indoor W.B.			72°F / 22.2°C						67°F / 19.4°C						64°F / 17.8°C						61°F / 16.1°C					
Outdoor D.B.			Max	Rated	75%	50%	25%	Min	Max	Rated	75%	50%	25%	Min	Max	Rated	75%	50%	25%	Min	Max	Rated	75%	50%	25%	Min
(°F)	(°C)																									
115	46.1	Q(Btu/h)	34776	34776	26082	17388	-	15456	32868	32868	24651	16434	-	14608	30996	30996	23247	15498	-	13776	29088	29088	21816	14544	-	12928
		W	3937	3937	2953	1969	-	1180	3859	3859	2894	1929	-	1156	3787	3787	2840	1893	-	1135	3721	3721	2791	1861	-	1115
110	43.3	Q(Btu/h)	35712	35712	26784	17856	-	15872	33696	33696	25272	16848	-	14976	31644	31644	23733	15822	-	14064	29844	29844	22383	14922	-	13264
		W	3761	3761	2820	1880	-	1127	3692	3692	2769	1846	-	1106	3626	3626	2720	1813	-	1087	3561	3561	2671	1781	-	1067
106	41.1	Q(Btu/h)	36504	36504	27378	18252	-	16224	34452	34452	25839	17226	-	15312	32364	32364	24273	16182	-	14384	30456	30456	22842	15228	-	13536
		W	3659	3659	2744	1830	-	1097	3561	3561	2671	1781	-	1067	3496	3496	2622	1748	-	1048	3434	3434	2575	1717	-	1029
102	38.9	Q(Btu/h)	37116	37116	27837	18558	-	16496	35100	35100	26325	17550	-	15600	32904	32904	24678	16452	-	14624	30888	30888	23166	15444	-	13728
		W	3545	3545	2659	1772	-	1062	3479	3479	2609	1740	-	1043	3401	3401	2551	1700	-	1019	3335	3335	2502	1668	-	1000
98	36.7	Q(Btu/h)	37656	37656	28242	18828	-	16736	35532	35532	26649	17766	-	15792	33444	33444	25083	16722	-	14864	31356	31356	23517	15678	-	13936
		W	3434	3434	2575	1717	-	1029	3368	3368	2526	1684	-	1009	3303	3303	2477	1651	-	990	3237	3237	2428	1619	-	970
94	34.4	Q(Btu/h)	38160	38160	28620	19080	-	16960	36000	36000	27000	18000	-	16000	33876	33876	25407	16938	-	15056	31788	31788	23841	15894	-	14128
		W	3335	3335	2502	1668	-	1000	3270	3270	2453	1635	-	980	3211	3211	2408	1606	-	962	3133	3133	2349	1566	-	939
90	32.2	Q(Btu/h)	38700	38700	29025	19350	-	17200	36432	36432	27324	18216	-	16192	34308	34308	25731	17154	-	15248	32220	32220	24165	16110	-	14320
		W	3237	3237	2428	1619	-	970	3172	3172	2379	1586	-	951	3107	3107	2330	1553	-	931	3044	3044	2283	1522	-	912
86	30.0	Q(Btu/h)	39204	39204	29403	19602	-	17424	36972	36972	27729	18486	-	16432	34776	34776	26082	17388	-	15456	32652	32652	24489	16326	-	14512
		W	3149	3149	2362	1575	-	944	3090	3090	2318	1545	-	926	3028	3028	2271	1514	-	907	2963	2963	2222	1481	-	888
82	27.8	Q(Btu/h)	39564	39564	29673	19782	-	17584	37296	37296	27972	18648	-	16576	35028	35028	26271	17514	-	15568	32904	32904	24678	16452	-	14624
		W	3093	3093	2320	1547	-	927	3028	3028	2271	1514	-	907	2946	2946	2210	1473	-	883	2897	2897	2173	1449	-	868
78	25.6	Q(Btu/h)	39924	39924	29943	19962	-	17744	37656	37656	28242	18828	-	16736	35424	35424	26568	17712	-	15744	33192	33192	24894	16596	-	14752
		W	3018	3018	2264	1509	-	905	2959	2959	2220	1480	-	887	2894	2894	2170	1447	-	867	2822	2822	2117	1411	-	846
74	23.3	Q(Btu/h)	40104	40104	30078	20052	-	17824	37836	37836	28377	18918	-	16816	35712	35712	26784	17856	-	15872	33444	33444	25083	16722	-	14864
		W	2963	2963	2222	1481	-	888	2897	2897	2173	1449	-	868	2832	2832	2124	1416	-	849	2770	2770	2077	1385	-	830
70	21.1	Q(Btu/h)	40284	40284	30213	20142	-	17904	37980	37980	28485	18990	-	16880	35892	35892	26919	17946	-	15952	33624	33624	25218	16812	-	14944
		W	2914	2914	2185	1457	-	873	2848	2848	2136	1424	-	854	2783	2783	2087	1391	-	834	2721	2721	2040	1360	-	815
66	18.9	Q(Btu/h)	40536	40536	30402	20268	-	18016	38340	38340	28755	19170	-	17040	36072	36072	27054	18036	-	16032	33984	33984	25488	16992	-	15104
		W	2865	2865	2148	1432	-	858	2799	2799	2099	1400	-	839	2737	2737	2053	1368	-	820	2672	2672	2004	1336	-	801
62	16.7	Q(Btu/h)	40608	40608	30456	20304	-	18048	38448	38448	28836	19224	-	17088	36252	36252	27189	18126	-	16112	34128	34128	25596	17064	-	15168
		W	2832	2832	2124	1416	-	849	2783	2783	2087	1391	-	834	2704	2704	2028	1352	-	810	2639	2639	1979	1319	-	791
58	14.4	Q(Btu/h)	40752	40752	30564	20376	-	18112	38520	38520	28890	19260	-	17120	36216	36216	27162	18108	-	16096	34092	34092	25569	17046	-	15152
		W	2796	2796	2097	1398	-	838	2727	2727	2045	1364	-	817	2662	2662	1996	1331	-	798	2590	2590	1942	1295	-	776
54	12.2	Q(Btu/h)	40896	40896	30672	20448	-	18176	38700	38700	29025	19350	-	17200	36432	36432	27324	18216	-	16192	34308	34308	25731	17154	-	15248
		W	2783	2783	2087	1391	-	834	2721	2721	2040	1360	-	815	2649	2649	1987	1324	-	794	2573	2573	1930	1287	-	771
50	10.0	Q(Btu/h)	40968	40968	30726	20484	-	18208	38772	38772	29079	19386	-	17232	36612	36612	27459	18306	-	16272	34452	34452	25839	17226	-	15312
		W	2747	2747	2060	1373	-	823	2678	2678	2009	1339	-	803	2606	2606	1955	1303	-	781	2534	2534	1901	1267	-	760
46	7.8	Q(Btu/h)	41040	41040	30780	20520	-	18240	38880	38880	29160	19440	-	17280	36684	36684	27513	18342	-	16304	34596	34596	25947	17298	-	15376
		W	2727	2727	2045	1364	-	817	2662	2662	1996	1331	-	798	2590	2590	1942	1295	-	776	2518	2518	1888	1259	-	755
42	5.6	Q(Btu/h)	41076	41076	30807	20538	-	18256	38880	38880	29160	19440	-	17280	36756	36756	27567	18378	-	16336	34632	34632	25974	17316	-	15392
		W	2721	2721	2040	1360	-	815	2652	2652	1989	1326	-	795	2573	2573	1930	1287	-	771	2498	2498	1874	1249	-	749
38	3.3	Q(Btu/h)	41076	41076	30807	20538	-	18256	38952	38952	29214	19476	-	17312	36828	36828	27621	18414	-	16368	34740	34740	26055	17370	-	15440
		W	2704	2704	2028	1352	-	810	2632	2632	1974	1316	-	789	2557	2557	1918	1279	-	766	2479	2479	1859	1239	-	743
34	1.1	Q(Btu/h)	41112	41112	30834	20556	-	18272	38988	38988	29241	19494	-	17328	36900	36900	27675	18450	-	16400	34812	34812	26109	17406	-	15472
		W	2694	2694	2021	1347	-	808	2626	2626	1969	1313	-	787	2551	2551	1913	1275	-	764	2475	2475	1857	1238	-	742
30	-1.1	Q(Btu/h)	41112	41112	30834	20556	-	18272	38988	38988	29241	19494	-	17328	36936	36936	27702	18468	-	16416	34848	34848	26136	17424	-	15488
		W	2694	2694	2021	1347	-	808	2616	2616	1962	1308	-	784	2544	2544	1908	1272	-	762	2466	2466	1849	1233	-	739
26	-3.3	Q(Btu/h)	41148	41148	30861	20574	-	18288	39060	39060	29295	19530	-	17360	37008	37008	27756	18504	-	16448	34956	34956	26217	17478	-	15536
		W	2688	2688	2016	1344	-	806	2609	2609	1957	1305	-	782	2538	2538	1903	1269	-	760	2459	2459	1844	1230	-	737
23	-5.0	Q(Btu/h)	41148	41148	30861	20574	-	18288	39096	39096	29322	19548	-	17376	37044	37044	27783	18522	-	16464	35028	35028	26271	17514	-	15568
		W	2681	2681	2011	1341	-	804	2609	2609	1957	1305	-	782	2534	2534	1901	1267	-	760	2459	2459	1844	1230	-	737
18	-7.8	Q(Btu/h)	41256	41256	30942	20628	-	18336	39204	39204	29403	19602	-	17424	37044	37044	27783	18522	-	16464	35208	35208	26406	17604	-	15648
		W	2672	2672	2004	1336	-	801	2606	2606	1955	1303	-	781	2531	2531	1898	1265	-	759	2459	2459	1844	1230	-	737
14	-10.0	Q(Btu/h)	41256	41256	30942	20628	-	18336	39204	39204	29403	19602	-	17424	37188	37188	27891	18594	-	16528	35244	35244	26433	17622	-	15664
		W	2678	2678	2009	1339	-	803	2606	2606	1955	1303	-	781	2538	2538	1903	1269	-	760	2462	2462	1847	1231	-	738
10	-12.2	Q(Btu/h)	41328	41328	30996	20664	-	18368	39204	39204	29403	19602	-	17424	37296	37296	27972	18648	-	16576	35352	35352	26514	17676	-	15712
		W	2675	2675	2006	1337	-	802	2606	2606	1955	1303	-	781	2541	2541	1906	1270	-	761	2466	2466	1849	1233	-	739
6	-14.4	Q(Btu/h)	41364	41364	31023	20682	-	18384	39348	39348	29511	19674	-	17488	37368	37368	28026	18684	-	16608	35388	35388	26541	17694	-	15728
		W	2675	2675	2006	1337	-	802	2609	2609	1957	1305	-	782	2544	2544	1908	1272	-	762	2475	2475	1857	1238	-	742
2	-16.7	Q(Btu/h)	41472	41472	31104	20736	-	18432	39492	39492	29619	19746	-	17552	37476	37476	28107	18738	-	16656	35640	35640	26730	17820	-	15840
		W	2672	2672	2004	1336	-	801	2609	2609	1957	1305	-	782	2544	2544	1908	1272	-	762	2479	2479	1859	1239	-	743
0	-17.8	Q(Btu/h)	41544	41544	31158	20772	-	18464	39564	39564	29673	19782	-	17584	37584	37584	28188	18792	-	16704	35640	35640	26730	17820	-	15840
		W	2672	2672	2004	1336	-	801	2613	2613	1960	1306	-	783	2551	2551	1913	1275	-	764	2485	2485	1864	1243	-	745

PCA-A36KA8
PUZ-A36NKA8
2) HEATING

Rated
Q(Btu/h): 38000
W: 2410

Indoor D.B.			80°F / 26.7°C						70°F / 21.1°C						60°F / 15.6°C					
Outdoor W.B.			Max	Rated	75%	50%	25%	Min	Max	Rated	75%	50%	25%	Min	Max	Rated	75%	50%	25%	Min
(°F)	(°C)																			
70	21.1	Q(Btu/h)	53880	51186	38390	25593	-	24246	55520	52744	39558	26372	-	24984	57600	54720	41040	27360	-	25920
		W	4682	3299	2474	1650	-	1437	4361	3073	2305	1536	-	1339	4063	2863	2147	1432	-	1247
65	18.3	Q(Btu/h)	51080	48526	36395	24263	-	22986	52720	50084	37563	25042	-	23724	54680	51946	38960	25973	-	24606
		W	4525	3188	2391	1594	-	1389	4200	2959	2220	1480	-	1289	3923	2764	2073	1382	-	1204
60	15.6	Q(Btu/h)	48400	45980	34485	22990	-	21780	50040	47538	35654	23769	-	22518	51880	49286	36965	24643	-	23346
		W	4323	3046	2285	1523	-	1327	4046	2851	2138	1426	-	1242	3786	2668	2001	1334	-	1162
55	12.8	Q(Btu/h)	45600	43320	32490	21660	-	20520	47240	44878	33659	22439	-	21258	48960	46512	34884	23256	-	22032
		W	4196	2957	2218	1479	-	1288	3882	2735	2052	1368	-	1192	3653	2574	1930	1287	-	1121
50	10.0	Q(Btu/h)	42840	40698	30524	20349	-	19278	44440	42218	31664	21109	-	19998	46080	43776	32832	21888	-	20736
		W	4032	2841	2131	1421	-	1238	3724	2624	1968	1312	-	1143	3523	2482	1862	1241	-	1082
47	8.3	Q(Btu/h)	41080	39026	29270	19513	-	18486	42680	40546	30410	20273	-	19206	44280	42066	31550	21033	-	19926
		W	3902	2750	2062	1375	-	1198	3622	2552	1914	1276	-	1112	3410	2403	1802	1201	-	1047
42	5.6	Q(Btu/h)	38320	36404	27303	18202	-	17244	40000	38000	28500	19000	-	18000	41520	39444	29583	19722	-	18684
		W	3656	2576	1932	1288	-	1122	3420	2410	1808	1205	-	1050	3187	2246	1685	1123	-	979
35	1.7	Q(Btu/h)	29480	28006	21005	14003	-	13266	31560	29982	22487	14991	-	14202	33800	32110	24083	16055	-	15210
		W	3252	2292	1719	1146	-	999	3023	2130	1598	1065	-	928	2811	1981	1486	991	-	863
32	0.0	Q(Btu/h)	28160	26752	20064	13376	-	12672	29800	28310	21233	14155	-	13410	30960	29412	22059	14706	-	13932
		W	3081	2171	1629	1086	-	946	2839	2000	1500	1000	-	872	2651	1868	1401	934	-	814
27	-2.8	Q(Btu/h)	26840	25498	19124	12749	-	12078	28200	26790	20093	13395	-	12690	29240	27778	20834	13889	-	13158
		W	2832	1995	1497	998	-	869	2586	1822	1366	911	-	794	2418	1704	1278	852	-	742
22	-5.6	Q(Btu/h)	25680	24396	18297	12198	-	11556	27040	25688	19266	12844	-	12168	28080	26676	20007	13338	-	12636
		W	2627	1851	1388	925	-	806	2435	1716	1287	858	-	748	2233	1574	1180	787	-	686
17	-8.3	Q(Btu/h)	24800	23560	17670	11780	-	11160	26120	24814	18611	12407	-	11754	27040	25688	19266	12844	-	12168
		W	2469	1740	1305	870	-	758	2305	1624	1218	812	-	708	2096	1477	1108	739	-	644
12	-11.1	Q(Btu/h)	23880	22686	17015	11343	-	10746	25200	23940	17955	11970	-	11340	26200	24890	18668	12445	-	11790
		W	2305	1624	1218	812	-	708	2182	1538	1153	769	-	670	2008	1415	1061	707	-	616
5	-15.0	Q(Btu/h)	22600	21470	16103	10735	-	10170	23560	22382	16787	11191	-	10602	24160	22952	17214	11476	-	10872
		W	2100	1480	1110	740	-	645	2014	1419	1065	710	-	618	1860	1311	983	656	-	571
2	-16.7	Q(Btu/h)	21560	20482	15362	10241	-	9702	22240	21128	15846	10564	-	10008	22720	21584	16188	10792	-	10224
		W	2014	1419	1065	710	-	618	1943	1369	1027	684	-	596	1802	1270	953	635	-	553
-3	-19.4	Q(Btu/h)	19480	18506	13880	9253	-	8766	20120	19114	14336	9557	-	9054	20440	19418	14564	9709	-	9198
		W	1888	1330	998	665	-	580	1823	1285	963	642	-	560	1713	1207	906	604	-	526
-8	-22.2	Q(Btu/h)	17360	16492	12369	8246	-	7812	17920	17024	12768	8512	-	8064	18120	17214	12911	8607	-	8154
		W	1765	1244	933	622	-	542	1703	1200	900	600	-	523	1625	1145	859	572	-	499
-13	-25.0	Q(Btu/h)	15240	14478	10859	7239	-	6858	15720	14934	11201	7467	-	7074	15760	14972	11229	7486	-	7092
		W	1648	1162	871	581	-	506	1580	1113	835	557	-	485	1542	1087	815	543	-	474

PEAD-A36AA9
PUZ-A36NKA8
1) COOLING

Rated
Q(Btu/h): 36000
W: 2910

Indoor W.B.			72°F / 22.2°C						67°F / 19.4°C						64°F / 17.8°C						61°F / 16.1°C					
Outdoor D.B.			Max	Rated	75%	50%	25%	Min	Max	Rated	75%	50%	25%	Min	Max	Rated	75%	50%	25%	Min	Max	Rated	75%	50%	25%	Min
(°F)	(°C)																									
115	46.1	Q(Btu/h)	34776	34776	26082	17388	8694	1507	32868	32868	24651	16434	8217	1424	30996	30996	23247	15498	7749	1343	29088	29088	21816	14544	7272	1260
		W	3504	3504	2628	1752	876	1228	3434	3434	2575	1717	858	1204	3370	3370	2527	1685	842	1181	3312	3312	2484	1656	828	1161
110	43.3	Q(Btu/h)	35712	35712	26784	17856	8928	1548	33696	33696	25272	16848	8424	1460	31644	31644	23733	15822	7911	1371	29844	29844	22383	14922	7461	1293
		W	3347	3347	2510	1673	837	1173	3285	3285	2464	1643	821	1152	3227	3227	2420	1614	807	1131	3169	3169	2377	1584	792	1111
106	41.1	Q(Btu/h)	36504	36504	27378	18252	9126	1582	34452	34452	25839	17226	8613	1493	32364	32364	24273	16182	8091	1402	30456	30456	22842	15228	7614	1320
		W	3256	3256	2442	1628	814	1141	3169	3169	2377	1584	792	1111	3111	3111	2333	1555	778	1090	3056	3056	2292	1528	764	1071
102	38.9	Q(Btu/h)	37116	37116	27837	18558	9279	1608	35100	35100	26325	17550	8775	1521	32904	32904	24678	16452	8226	1426	30888	30888	23166	15444	7722	1338
		W	3154	3154	2366	1577	789	1106	3096	3096	2322	1548	774	1085	3026	3026	2270	1513	757	1061	2968	2968	2226	1484	742	1040
98	36.7	Q(Btu/h)	37656	37656	28242	18828	9414	1632	35532	35532	26649	17766	8883	1540	33444	33444	25083	16722	8361	1449	31356	31356	23517	15678	7839	1359
		W	3056	3056	2292	1528	764	1071	2997	2997	2248	1499	749	1051	2939	2939	2204	1470	735	1030	2881	2881	2161	1440	720	1010
94	34.4	Q(Btu/h)	38160	38160	28620	19080	9540	1654	36000	36000	27000	18000	9000	1560	33876	33876	25407	16938	8469	1468	31788	31788	23841	15894	7947	1377
		W	2968	2968	2226	1484	742	1040	2910	2910	2183	1455	728	1020	2858	2858	2143	1429	714	1002	2788	2788	2091	1394	697	977
90	32.2	Q(Btu/h)	38700	38700	29025	19350	9675	1677	36432	36432	27324	18216	9108	1579	34308	34308	25731	17154	8577	1487	32220	32220	24165	16110	8055	1396
		W	2881	2881	2161	1440	720	1010	2823	2823	2117	1411	706	989	2765	2765	2073	1382	691	969	2709	2709	2032	1355	677	950
86	30.0	Q(Btu/h)	39204	39204	29403	19602	9801	1699	36972	36972	27729	18486	9243	1602	34776	34776	26082	17388	8694	1507	32652	32652	24489	16326	8163	1415
		W	2802	2802	2102	1401	701	982	2750	2750	2062	1375	687	964	2695	2695	2021	1347	674	945	2636	2636	1977	1318	659	924
82	27.8	Q(Btu/h)	39564	39564	29673	19782	9891	1714	37296	37296	27972	18648	9324	1616	35028	35028	26271	17514	8757	1518	32904	32904	24678	16452	8226	1426
		W	2753	2753	2065	1376	688	965	2695	2695	2021	1347	674	945	2622	2622	1966	1311	655	919	2578	2578	1934	1289	645	904
78	25.6	Q(Btu/h)	39924	39924	29943	19962	9981	1730	37656	37656	28242	18828	9414	1632	35424	35424	26568	17712	8856	1535	33192	33192	24894	16596	8298	1438
		W	2686	2686	2014	1343	671	941	2634	2634	1975	1317	658	923	2575	2575	1932	1288	644	903	2511	2511	1883	1256	628	880
74	23.3	Q(Btu/h)	40104	40104	30078	20052	10026	1738	37836	37836	28377	18918	9459	1640	35712	35712	26784	17856	8928	1548	33444	33444	25083	16722	8361	1449
		W	2636	2636	1977	1318	659	924	2578	2578	1934	1289	645	904	2520	2520	1890	1260	630	883	2465	2465	1849	1232	616	864
70	21.1	Q(Btu/h)	40284	40284	30213	20142	10071	1746	37980	37980	28485	18990	9495	1646	35892	35892	26919	17946	8973	1555	33624	33624	25218	16812	8406	1457
		W	2593	2593	1945	1296	648	909	2535	2535	1901	1267	634	888	2476	2476	1857	1238	619	868	2421	2421	1816	1211	605	849
66	18.9	Q(Btu/h)	40536	40536	30402	20268	10134	1757	38340	38340	28755	19170	9585	1661	36072	36072	27054	18036	9018	1563	33984	33984	25488	16992	8496	1473
		W	2549	2549	1912	1275	637	894	2491	2491	1868	1245	623	873	2436	2436	1827	1218	609	854	2377	2377	1783	1189	594	833
62	16.7	Q(Btu/h)	40608	40608	30456	20304	10152	1760	38448	38448	28836	19224	9612	1666	36252	36252	27189	18126	9063	1571	34128	34128	25596	17064	8532	1479
		W	2520	2520	1890	1260	630	883	2476	2476	1857	1238	619	868	2407	2407	1805	1203	602	844	2348	2348	1761	1174	587	823
58	14.4	Q(Btu/h)	40752	40752	30564	20376	10188	1766	38520	38520	28890	19260	9630	1669	36216	36216	27162	18108	9054	1569	34092	34092	25569	17046	8523	1477
		W	2488	2488	1866	1244	622	872	2427	2427	1820	1213	607	851	2369	2369	1777	1184	592	830	2305	2305	1729	1152	576	808
54	12.2	Q(Btu/h)	40896	40896	30672	20448	10224	1772	38700	38700	29025	19350	9675	1677	36432	36432	27324	18216	9108	1579	34308	34308	25731	17154	8577	1487
		W	2476	2476	1857	1238	619	868	2421	2421	1816	1211	605	849	2357	2357	1768	1179	589	826	2290	2290	1718	1145	573	803
50	10.0	Q(Btu/h)	40968	40968	30726	20484	10242	1775	38772	38772	29079	19386	9693	1680	36612	36612	27459	18306	9153	1587	34452	34452	25839	17226	8613	1493
		W	2444	2444	1833	1222	611	857	2383	2383	1787	1192	596	835	2319	2319	1739	1160	580	813	2255	2255	1691	1128	564	791
46	7.8	Q(Btu/h)	41040	41040	30780	20520	10260	1778	38880	38880	29160	19440	9720	1685	36684	36684	27513	18342	9171	1590	34596	34596	25947	17298	8649	1499
		W	2427	2427	1820	1213	607	851	2369	2369	1777	1184	592	830	2305	2305	1729	1152	576	808	2241	2241	1681	1120	560	785
42	5.6	Q(Btu/h)	41076	41076	30807	20538	10269	1780	38880	38880	29160	19440	9720	1685	36756	36756	27567	18378	9189	1593	34632	34632	25974	17316	8658	1501
		W	2421	2421	1816	1211	605	849	2360	2360	1770	1180	590	827	2290	2290	1718	1145	573	803	2223	2223	1667	1112	556	779
38	3.3	Q(Btu/h)	41076	41076	30807	20538	10269	1780	38952	38952	29214	19476	9738	1688	36828	36828	27621	18414	9207	1596	34740	34740	26055	17370	8685	1505
		W	2407	2407	1805	1203	602	844	2343	2343	1757	1171	586	821	2276	2276	1707	1138	569	798	2206	2206	1654	1103	551	773
34	1.1	Q(Btu/h)	41112	41112	30834	20556	10278	1782	38988	38988	29241	19494	9747	1689	36900	36900	27675	18450	9225	1599	34812	34812	26109	17406	8703	1509
		W	2398	2398	1798	1199	599	840	2337	2337	1753	1168	584	819	2270	2270	1702	1135	567	796	2203	2203	1652	1101	551	772
30	-1.1	Q(Btu/h)	41112	41112	30834	20556	10278	1782	38988	38988	29241	19494	9747	1689	36936	36936	27702	18468	9234	1601	34848	34848	26136	17424	8712	1510
		W	2398	2398	1798	1199	599	840	2328	2328	1746	1164	582	816	2264	2264	1698	1132	566	794	2194	2194	1646	1097	549	769
26	-3.3	Q(Btu/h)	41148	41148	30861	20574	10287	1783	39060	39060	29295	19530	9765	1693	37008	37008	27756	18504	9252	1604	34956	34956	26217	17478	8739	1515
		W	2392	2392	1794	1196	598	838	2322	2322	1742	1161	581	814	2258	2258	1694	1129	565	792	2188	2188	1641	1094	547	767
23	-5.0	Q(Btu/h)	41148	41148	30861	20574	10287	1783	39096	39096	29322	19548	9774	1694	37044	37044	27783	18522	9261	1605	35028	35028	26271	17514	8757	1518
		W	2386	2386	1790	1193	597	836	2322	2322	1742	1161	581	814	2255	2255	1691	1128	564	791	2188	2188	1641	1094	547	767
18	-7.8	Q(Btu/h)	41256	41256	30942	20628	10314	1788	39204	39204	29403	19602	9801	1699	37044	37044	27783	18522	9261	1605	35208	35208	26406	17604	8802	1526
		W	2377	2377	1783	1189	594	833	2319	2319	1739	1160	580	813	2252	2252	1689	1126	563	789	2188	2188	1641	1094	547	767
14	-10.0	Q(Btu/h)	41256	41256	30942	20628	10314	1788	39204	39204	29403	19602	9801	1699	37188	37188	27891	18594	9297	1611	35244	35244	26433	17622	8811	1527
		W	2383	2383	1787	1192	596	835	2319	2319	1739	1160	580	813	2258	2258	1694	1129	565	792	2191	2191	1643	1096	548	768
10	-12.2	Q(Btu/h)	41328	41328	30996	20664	10332	1791	39204	39204	29403	19602	9801	1699	37296	37296	27972	18648	9324	1616	35352	35352	26514	17676	8838	1532
		W	2380	2380	1785	1190	595	834	2319	2319	1739	1160	580	813	2261	2261	1696	1131	565	793	2194	2194	1646	1097	549	769
6	-14.4	Q(Btu/h)	41364	41364	31023	20682	10341	1792	39348	39348	29511	19674	9837	1705	37368	37368	28026	18684	9342	1619	35388	35388	26541	17694	8847	1533
		W	2380	2380	1785	1190	595	834	2322	2322	1742	1161	581	814	2264	2264	1698	1132	566	794	2203	2203	1652	1101	551	772
2	-16.7	Q(Btu/h)	41472	41472	31104	20736	10368	1797	39492	39492	29619	19746	9873	1711	37476	37476	28107	18738	9369	1624	35640	35640	26730	17820	8910	1544
		W	2377	2377	1783	1189	594	833	2322	2322	1742	1161	581	814	2264	2264	1698	1132	566	794	2206	2206	1654	1103	551	773
0	-17.8	Q(Btu/h)	41544	41544	31158	20772	10386	1800	39564	39564	29673	19782	9891	1714	37584	37584	28188	18792	9396	1629	35640	35640	26730	17820	8910	1544
		W	2377	2377	1783	1189	594	833	2325	2325	1744	1163	581	815	2270	2270	1702	1135	567	796	2212	2212	1659	1106	553	775

PEAD-A36AA9
PUZ-A36NKA8
2) HEATING

Rated
Q(Btu/h): 38000
W: 2440

Indoor D.B.			80°F / 26.7°C						70°F / 21.1°C						60°F / 15.6°C					
Outdoor W.B.			Max	Rated	75%	50%	25%	Min	Max	Rated	75%	50%	25%	Min	Max	Rated	75%	50%	25%	Min
(°F)	(°C)																			
70	21.1	Q(Btu/h)	53880	51186	38390	25593	-	25324	55520	52744	39558	26372	-	26094	57600	54720	41040	27360	-	27072
		W	4175	3340	2505	1670	-	1451	3889	3111	2333	1556	-	1352	3623	2899	2174	1449	-	1259
65	18.3	Q(Btu/h)	51080	48526	36395	24263	-	24008	52720	50084	37563	25042	-	24778	54680	51946	38960	25973	-	25700
		W	4035	3228	2421	1614	-	1402	3745	2996	2247	1498	-	1302	3498	2799	2099	1399	-	1216
60	15.6	Q(Btu/h)	48400	45980	34485	22990	-	22748	50040	47538	35654	23769	-	23519	51880	49286	36965	24643	-	24384
		W	3855	3084	2313	1542	-	1340	3608	2887	2165	1443	-	1254	3376	2701	2026	1351	-	1173
55	12.8	Q(Btu/h)	45600	43320	32490	21660	-	21432	47240	44878	33659	22439	-	22203	48960	46512	34884	23256	-	23011
		W	3742	2994	2245	1497	-	1301	3462	2769	2077	1385	-	1203	3257	2606	1954	1303	-	1132
50	10.0	Q(Btu/h)	42840	40698	30524	20349	-	20135	44440	42218	31664	21109	-	20887	46080	43776	32832	21888	-	21658
		W	3596	2877	2158	1438	-	1250	3321	2657	1993	1329	-	1154	3142	2513	1885	1257	-	1092
47	8.3	Q(Btu/h)	41080	39026	29270	19513	-	19308	42680	40546	30410	20273	-	20060	44280	42066	31550	21033	-	20812
		W	3480	2784	2088	1392	-	1209	3230	2584	1938	1292	-	1123	3041	2433	1825	1216	-	1057
42	5.6	Q(Btu/h)	38320	36404	27303	18202	-	18010	40000	38000	28500	19000	-	18800	41520	39444	29583	19722	-	19514
		W	3260	2608	1956	1304	-	1133	3050	2440	1830	1220	-	1060	2843	2274	1706	1137	-	988
35	1.7	Q(Btu/h)	29480	28006	21005	14003	-	13856	31560	29982	22487	14991	-	14833	33800	32110	24083	16055	-	15886
		W	2901	2320	1740	1160	-	1008	2696	2157	1618	1078	-	937	2507	2006	1504	1003	-	871
32	0.0	Q(Btu/h)	28160	26752	20064	13376	-	13235	29800	28310	21233	14155	-	14006	30960	29412	22059	14706	-	14551
		W	2748	2198	1649	1099	-	955	2532	2025	1519	1013	-	880	2364	1891	1418	946	-	822
27	-2.8	Q(Btu/h)	26840	25498	19124	12749	-	12615	28200	26790	20093	13395	-	13254	29240	27778	20834	13889	-	13743
		W	2525	2020	1515	1010	-	878	2306	1845	1383	922	-	801	2156	1725	1294	863	-	749
22	-5.6	Q(Btu/h)	25680	24396	18297	12198	-	12070	27040	25688	19266	12844	-	12709	28080	26676	20007	13338	-	13198
		W	2342	1874	1405	937	-	814	2172	1737	1303	869	-	755	1992	1593	1195	797	-	692
17	-8.3	Q(Btu/h)	24800	23560	17670	11780	-	11656	26120	24814	18611	12407	-	12276	27040	25688	19266	12844	-	12709
		W	2202	1762	1321	881	-	765	2056	1645	1233	822	-	714	1870	1496	1122	748	-	650
12	-11.1	Q(Btu/h)	23880	22686	17015	11343	-	11224	25200	23940	17955	11970	-	11844	26200	24890	18668	12445	-	12314
		W	2056	1645	1233	822	-	714	1946	1557	1168	778	-	676	1790	1432	1074	716	-	622
5	-15.0	Q(Btu/h)	22600	21470	16103	10735	-	10622	23560	22382	16787	11191	-	11073	24160	22952	17214	11476	-	11355
		W	1873	1498	1124	749	-	651	1796	1437	1078	719	-	624	1659	1327	996	664	-	577
2	-16.7	Q(Btu/h)	21560	20482	15362	10241	-	10133	22240	21128	15846	10564	-	10453	22720	21584	16188	10792	-	10678
		W	1796	1437	1078	719	-	624	1732	1386	1039	693	-	602	1607	1286	964	643	-	559
-3	-19.4	Q(Btu/h)	19480	18506	13880	9253	-	9156	20120	19114	14336	9557	-	9456	20440	19418	14564	9709	-	9607
		W	1684	1347	1010	673	-	585	1626	1301	975	650	-	565	1528	1222	917	611	-	531
-8	-22.2	Q(Btu/h)	17360	16492	12369	8246	-	8159	17920	17024	12768	8512	-	8422	18120	17214	12911	8607	-	8516
		W	1574	1259	944	630	-	547	1519	1215	911	608	-	528	1449	1159	869	580	-	504
-13	-25.0	Q(Btu/h)	15240	14478	10859	7239	-	7163	15720	14934	11201	7467	-	7388	15760	14972	11229	7486	-	7407
		W	1470	1176	882	588	-	511	1409	1127	845	564	-	490	1376	1100	825	550	-	478

PLA-A42EA8
PUZ-A42NKA8
1) COOLING

Rated
Q(Btu/h): 42000
W: 3590

Indoor W.B.			72°F / 22.2°C						67°F / 19.4°C						64°F / 17.8°C						61°F / 16.1°C					
Outdoor D.B.			Max	Rated	75%	50%	25%	Min	Max	Rated	75%	50%	25%	Min	Max	Rated	75%	50%	25%	Min	Max	Rated	75%	50%	25%	Min
(°F)	(°C)																									
115	46.1	Q(Btu/h)	40572	40572	30429	20286	-	15456	38346	38346	28760	19173	-	14608	36162	36162	27122	18081	-	13776	33936	33936	25452	16968	-	12928
		W	4322	4322	3242	2161	-	1047	4236	4236	3177	2118	-	1027	4157	4157	3118	2079	-	1007	4085	4085	3064	2043	-	990
110	43.3	Q(Btu/h)	41664	41664	31248	20832	-	15872	39312	39312	29484	19656	-	14976	36918	36918	27689	18459	-	14064	34818	34818	26114	17409	-	13264
		W	4129	4129	3096	2064	-	1001	4053	4053	3040	2027	-	982	3981	3981	2986	1991	-	965	3910	3910	2932	1955	-	947
106	41.1	Q(Btu/h)	42588	42588	31941	21294	-	16224	40194	40194	30146	20097	-	15312	37758	37758	28319	18879	-	14384	35532	35532	26649	17766	-	13536
		W	4017	4017	3013	2009	-	974	3910	3910	2932	1955	-	947	3838	3838	2878	1919	-	930	3770	3770	2827	1885	-	914
102	38.9	Q(Btu/h)	43302	43302	32477	21651	-	16496	40950	40950	30713	20475	-	15600	38388	38388	28791	19194	-	14624	36036	36036	27027	18018	-	13728
		W	3892	3892	2919	1946	-	943	3820	3820	2865	1910	-	926	3734	3734	2800	1867	-	905	3662	3662	2746	1831	-	887
98	36.7	Q(Btu/h)	43932	43932	32949	21966	-	16736	41454	41454	31091	20727	-	15792	39018	39018	29264	19509	-	14864	36582	36582	27437	18291	-	13936
		W	3770	3770	2827	1885	-	914	3698	3698	2773	1849	-	896	3626	3626	2719	1813	-	879	3554	3554	2666	1777	-	861
94	34.4	Q(Btu/h)	44520	44520	33390	22260	-	16960	42000	42000	31500	21000	-	16000	39522	39522	29642	19761	-	15056	37086	37086	27815	18543	-	14128
		W	3662	3662	2746	1831	-	887	3590	3590	2693	1795	-	870	3525	3525	2644	1763	-	854	3439	3439	2579	1720	-	833
90	32.2	Q(Btu/h)	45150	45150	33863	22575	-	17200	42504	42504	31878	21252	-	16192	40026	40026	30020	20013	-	15248	37590	37590	28193	18795	-	14320
		W	3554	3554	2666	1777	-	861	3482	3482	2612	1741	-	844	3411	3411	2558	1705	-	827	3342	3342	2507	1671	-	810
86	30.0	Q(Btu/h)	45738	45738	34304	22869	-	17424	43134	43134	32351	21567	-	16432	40572	40572	30429	20286	-	15456	38094	38094	28571	19047	-	14512
		W	3457	3457	2593	1729	-	838	3393	3393	2544	1696	-	822	3324	3324	2493	1662	-	806	3253	3253	2439	1626	-	788
82	27.8	Q(Btu/h)	46158	46158	34619	23079	-	17584	43512	43512	32634	21756	-	16576	40866	40866	30650	20433	-	15568	38388	38388	28791	19194	-	14624
		W	3396	3396	2547	1698	-	823	3324	3324	2493	1662	-	806	3235	3235	2426	1617	-	784	3181	3181	2386	1590	-	771
78	25.6	Q(Btu/h)	46578	46578	34934	23289	-	17744	43932	43932	32949	21966	-	16736	41328	41328	30996	20664	-	15744	38724	38724	29043	19362	-	14752
		W	3314	3314	2485	1657	-	803	3249	3249	2437	1624	-	787	3177	3177	2383	1589	-	770	3098	3098	2324	1549	-	751
74	23.3	Q(Btu/h)	46788	46788	35091	23394	-	17824	44142	44142	33107	22071	-	16816	41664	41664	31248	20832	-	15872	39018	39018	29264	19509	-	14864
		W	3253	3253	2439	1626	-	788	3181	3181	2386	1590	-	771	3109	3109	2332	1554	-	753	3041	3041	2281	1520	-	737
70	21.1	Q(Btu/h)	46998	46998	35249	23499	-	17904	44310	44310	33233	22155	-	16880	41874	41874	31406	20937	-	15952	39228	39228	29421	19614	-	14944
		W	3199	3199	2399	1599	-	775	3127	3127	2345	1563	-	758	3055	3055	2291	1528	-	740	2987	2987	2240	1493	-	724
66	18.9	Q(Btu/h)	47292	47292	35469	23646	-	18016	44730	44730	33548	22365	-	17040	42084	42084	31563	21042	-	16032	39648	39648	29736	19824	-	15104
		W	3145	3145	2359	1572	-	762	3073	3073	2305	1537	-	745	3005	3005	2254	1502	-	728	2933	2933	2200	1467	-	711
62	16.7	Q(Btu/h)	47376	47376	35532	23688	-	18048	44856	44856	33642	22428	-	17088	42294	42294	31721	21147	-	16112	39816	39816	29862	19908	-	15168
		W	3109	3109	2332	1554	-	753	3055	3055	2291	1528	-	740	2969	2969	2227	1484	-	719	2897	2897	2173	1449	-	702
58	14.4	Q(Btu/h)	47544	47544	35658	23772	-	18112	44940	44940	33705	22470	-	17120	42252	42252	31689	21126	-	16096	39774	39774	29831	19887	-	15152
		W	3069	3069	2302	1535	-	744	2994	2994	2246	1497	-	726	2922	2922	2192	1461	-	708	2843	2843	2132	1422	-	689
54	12.2	Q(Btu/h)	47712	47712	35784	23856	-	18176	45150	45150	33863	22575	-	17200	42504	42504	31878	21252	-	16192	40026	40026	30020	20013	-	15248
		W	3055	3055	2291	1528	-	740	2987	2987	2240	1493	-	724	2908	2908	2181	1454	-	705	2825	2825	2119	1413	-	685
50	10.0	Q(Btu/h)	47796	47796	35847	23898	-	18208	45234	45234	33926	22617	-	17232	42714	42714	32036	21357	-	16272	40194	40194	30146	20097	-	15312
		W	3016	3016	2262	1508	-	731	2940	2940	2205	1470	-	713	2861	2861	2146	1431	-	693	2782	2782	2087	1391	-	674
46	7.8	Q(Btu/h)	47880	47880	35910	23940	-	18240	45360	45360	34020	22680	-	17280	42798	42798	32099	21399	-	16304	40362	40362	30272	20181	-	15376
		W	2994	2994	2246	1497	-	726	2922	2922	2192	1461	-	708	2843	2843	2132	1422	-	689	2764	2764	2073	1382	-	670
42	5.6	Q(Btu/h)	47922	47922	35942	23961	-	18256	45360	45360	34020	22680	-	17280	42882	42882	32162	21441	-	16336	40404	40404	30303	20202	-	15392
		W	2987	2987	2240	1493	-	724	2911	2911	2184	1456	-	706	2825	2825	2119	1413	-	685	2743	2743	2057	1371	-	665
38	3.3	Q(Btu/h)	47922	47922	35942	23961	-	18256	45444	45444	34083	22722	-	17312	42966	42966	32225	21483	-	16368	40530	40530	30398	20265	-	15440
		W	2969	2969	2227	1484	-	719	2890	2890	2167	1445	-	700	2807	2807	2106	1404	-	680	2721	2721	2041	1361	-	659
34	1.1	Q(Btu/h)	47964	47964	35973	23982	-	18272	45486	45486	34115	22743	-	17328	43050	43050	32288	21525	-	16400	40614	40614	30461	20307	-	15472
		W	2958	2958	2219	1479	-	717	2883	2883	2162	1441	-	699	2800	2800	2100	1400	-	679	2718	2718	2038	1359	-	659
30	-1.1	Q(Btu/h)	47964	47964	35973	23982	-	18272	45486	45486	34115	22743	-	17328	43092	43092	32319	21546	-	16416	40656	40656	30492	20328	-	15488
		W	2958	2958	2219	1479	-	717	2872	2872	2154	1436	-	696	2793	2793	2095	1397	-	677	2707	2707	2030	1353	-	656
26	-3.3	Q(Btu/h)	48006	48006	36005	24003	-	18288	45570	45570	34178	22785	-	17360	43176	43176	32382	21588	-	16448	40782	40782	30587	20391	-	15536
		W	2951	2951	2213	1475	-	715	2865	2865	2149	1432	-	694	2786	2786	2089	1393	-	675	2700	2700	2025	1350	-	654
23	-5.0	Q(Btu/h)	48006	48006	36005	24003	-	18288	45612	45612	34209	22806	-	17376	43218	43218	32414	21609	-	16464	40866	40866	30650	20433	-	15568
		W	2944	2944	2208	1472	-	713	2865	2865	2149	1432	-	694	2782	2782	2087	1391	-	674	2700	2700	2025	1350	-	654
18	-7.8	Q(Btu/h)	48132	48132	36099	24066	-	18336	45738	45738	34304	22869	-	17424	43218	43218	32414	21609	-	16464	41076	41076	30807	20538	-	15648
		W	2933	2933	2200	1467	-	711	2861	2861	2146	1431	-	693	2779	2779	2084	1389	-	673	2700	2700	2025	1350	-	654
14	-10.0	Q(Btu/h)	48132	48132	36099	24066	-	18336	45738	45738	34304	22869	-	17424	43386	43386	32540	21693	-	16528	41118	41118	30839	20559	-	15664
		W	2940	2940	2205	1470	-	713	2861	2861	2146	1431	-	693	2786	2786	2089	1393	-	675	2703	2703	2027	1352	-	655
10	-12.2	Q(Btu/h)	48216	48216	36162	24108	-	18368	45738	45738	34304	22869	-	17424	43512	43512	32634	21756	-	16576	41244	41244	30933	20622	-	15712
		W	2937	2937	2202	1468	-	712	2861	2861	2146	1431	-	693	2789	2789	2092	1395	-	676	2707	2707	2030	1353	-	656
6	-14.4	Q(Btu/h)	48258	48258	36194	24129	-	18384	45906	45906	34430	22953	-	17488	43596	43596	32697	21798	-	16608	41286	41286	30965	20643	-	15728
		W	2937	2937	2202	1468	-	712	2865	2865	2149	1432	-	694	2793	2793	2095	1397	-	677	2718	2718	2038	1359	-	659
2	-16.7	Q(Btu/h)	48384	48384	36288	24192	-	18432	46074	46074	34556	23037	-	17552	43722	43722	32792	21861	-	16656	41580	41580	31185	20790	-	15840
		W	2933	2933	2200	1467	-	711	2865	2865	2149	1432	-	694	2793	2793	2095	1397	-	677	2721	2721	2041	1361	-	659
0	-17.8	Q(Btu/h)	48468	48468	36351	24234	-	18464	46158	46158	34619	23079	-	17584	43848	43848	32886	21924	-	16704	41580	41580	31185	20790	-	15840
		W	2933	2933	2200	1467	-	711	2868	2868	2151	1434	-	695	2800	2800	2100	1400	-	679	2728	2728	2046	1364	-	661

PLA-A42EA8
PUZ-A42NKA8
2) HEATING

Rated
Q(Btu/h): 45000
W: 3290

Indoor D.B.			80°F / 26.7°C						70°F / 21.1°C						60°F / 15.6°C					
Outdoor W.B.			Max	Rated	75%	50%	25%	Min	Max	Rated	75%	50%	25%	Min	Max	Rated	75%	50%	25%	Min
(°F)	(°C)																			
70	21.1	Q(Btu/h)	64656	60615	45461	30308	-	24246	66624	62460	46845	31230	-	24984	69120	64800	48600	32400	-	25920
		W	5230	4504	3378	2252	-	1355	4871	4195	3146	2097	-	1262	4538	3909	2931	1954	-	1176
65	18.3	Q(Btu/h)	61296	57465	43099	28733	-	22986	63264	59310	44483	29655	-	23724	65616	61515	46136	30758	-	24606
		W	5054	4353	3265	2176	-	1310	4691	4040	3030	2020	-	1216	4382	3774	2830	1887	-	1136
60	15.6	Q(Btu/h)	58080	54450	40838	27225	-	21780	60048	56295	42221	28148	-	22518	62256	58365	43774	29183	-	23346
		W	4828	4159	3119	2079	-	1251	4519	3892	2919	1946	-	1171	4229	3642	2732	1821	-	1096
55	12.8	Q(Btu/h)	54720	51300	38475	25650	-	20520	56688	53145	39859	26573	-	21258	58752	55080	41310	27540	-	22032
		W	4687	4037	3028	2018	-	1215	4336	3734	2801	1867	-	1124	4080	3514	2635	1757	-	1057
50	10.0	Q(Btu/h)	51408	48195	36146	24098	-	19278	53328	49995	37496	24998	-	19998	55296	51840	38880	25920	-	20736
		W	4504	3879	2909	1939	-	1167	4160	3583	2687	1791	-	1078	3935	3389	2542	1694	-	1020
47	8.3	Q(Btu/h)	49296	46215	34661	23108	-	18486	51216	48015	36011	24008	-	19206	53136	49815	37361	24908	-	19926
		W	4359	3754	2815	1877	-	1130	4045	3484	2613	1742	-	1048	3809	3280	2460	1640	-	987
42	5.6	Q(Btu/h)	45984	43110	32333	21555	-	17244	48000	45000	33750	22500	-	18000	49824	46710	35033	23355	-	18684
		W	4084	3517	2638	1759	-	1058	3820	3290	2468	1645	-	990	3560	3066	2300	1533	-	923
35	1.7	Q(Btu/h)	35376	33165	24874	16583	-	13266	37872	35505	26629	17753	-	14202	40560	38025	28519	19013	-	15210
		W	3633	3129	2347	1564	-	941	3377	2908	2181	1454	-	875	3140	2704	2028	1352	-	814
32	0.0	Q(Btu/h)	33792	31680	23760	15840	-	12672	35760	33525	25144	16763	-	13410	37152	34830	26123	17415	-	13932
		W	3442	2964	2223	1482	-	892	3171	2731	2048	1365	-	822	2961	2550	1912	1275	-	767
27	-2.8	Q(Btu/h)	32208	30195	22646	15098	-	12078	33840	31725	23794	15863	-	12690	35088	32895	24671	16448	-	13158
		W	3163	2724	2043	1362	-	820	2888	2487	1865	1244	-	748	2701	2326	1745	1163	-	700
22	-5.6	Q(Btu/h)	30816	28890	21668	14445	-	11556	32448	30420	22815	15210	-	12168	33696	31590	23693	15795	-	12636
		W	2934	2527	1895	1263	-	760	2720	2342	1757	1171	-	705	2494	2148	1611	1074	-	646
17	-8.3	Q(Btu/h)	29760	27900	20925	13950	-	11160	31344	29385	22039	14693	-	11754	32448	30420	22815	15210	-	12168
		W	2758	2375	1782	1188	-	715	2575	2217	1663	1109	-	667	2342	2017	1513	1008	-	607
12	-11.1	Q(Btu/h)	28656	26865	20149	13433	-	10746	30240	28350	21263	14175	-	11340	31440	29475	22106	14738	-	11790
		W	2575	2217	1663	1109	-	667	2437	2099	1574	1050	-	632	2242	1931	1448	966	-	581
5	-15.0	Q(Btu/h)	27120	25425	19069	12713	-	10170	28272	26505	19879	13253	-	10602	28992	27180	20385	13590	-	10872
		W	2345	2020	1515	1010	-	608	2250	1938	1453	969	-	583	2078	1790	1342	895	-	539
2	-16.7	Q(Btu/h)	25872	24255	18191	12128	-	9702	26688	25020	18765	12510	-	10008	27264	25560	19170	12780	-	10224
		W	2250	1938	1453	969	-	583	2170	1869	1402	934	-	562	2013	1734	1300	867	-	522
-3	-19.4	Q(Btu/h)	23376	21915	16436	10958	-	8766	24144	22635	16976	11318	-	9054	24528	22995	17246	11498	-	9198
		W	2109	1816	1362	908	-	546	2036	1754	1315	877	-	528	1914	1648	1236	824	-	496
-8	-22.2	Q(Btu/h)	20832	19530	14648	9765	-	7812	21504	20160	15120	10080	-	8064	21744	20385	15289	10193	-	8154
		W	1971	1698	1273	849	-	511	1902	1638	1229	819	-	493	1815	1563	1172	781	-	470
-13	-25.0	Q(Btu/h)	18288	17145	12859	8573	-	6858	18864	17685	13264	8843	-	7074	18912	17730	13298	8865	-	7092
		W	1841	1586	1189	793	-	477	1765	1520	1140	760	-	457	1723	1484	1113	742	-	446

PVA-A42AA7
PUZ-A42NKA8
1) COOLING

Rated
Q(Btu/h): 42000
W: 4150

Indoor W.B.			72°F / 22.2°C						67°F / 19.4°C						64°F / 17.8°C						61°F / 16.1°C					
Outdoor D.B.			Max	Rated	75%	50%	25%	Min	Max	Rated	75%	50%	25%	Min	Max	Rated	75%	50%	25%	Min	Max	Rated	75%	50%	25%	Min
(°F)	(°C)																									
115	46.1	Q(Btu/h)	40572	40572	30429	20286	-	14490	38346	38346	28760	19173	-	13695	36162	36162	27122	18081	-	12915	33936	33936	25452	16968	-	12120
		W	4997	4997	3747	2498	-	1084	4897	4897	3673	2449	-	1062	4806	4806	3604	2403	-	1042	4723	4723	3542	2361	-	1024
110	43.3	Q(Btu/h)	41664	41664	31248	20832	-	14880	39312	39312	29484	19656	-	14040	36918	36918	27689	18459	-	13185	34818	34818	26114	17409	-	12435
		W	4773	4773	3579	2386	-	1035	4685	4685	3514	2343	-	1016	4602	4602	3452	2301	-	998	4519	4519	3390	2260	-	980
106	41.1	Q(Btu/h)	42588	42588	31941	21294	-	15210	40194	40194	30146	20097	-	14355	37758	37758	28319	18879	-	13485	35532	35532	26649	17766	-	12690
		W	4644	4644	3483	2322	-	1007	4519	4519	3390	2260	-	980	4436	4436	3327	2218	-	962	4358	4358	3268	2179	-	945
102	38.9	Q(Btu/h)	43302	43302	32477	21651	-	15465	40950	40950	30713	20475	-	14625	38388	38388	28791	19194	-	13710	36036	36036	27027	18018	-	12870
		W	4499	4499	3374	2249	-	976	4416	4416	3312	2208	-	958	4316	4316	3237	2158	-	936	4233	4233	3175	2117	-	918
98	36.7	Q(Btu/h)	43932	43932	32949	21966	-	15690	41454	41454	31091	20727	-	14805	39018	39018	29264	19509	-	13935	36582	36582	27437	18291	-	13065
		W	4358	4358	3268	2179	-	945	4275	4275	3206	2137	-	927	4192	4192	3144	2096	-	909	4109	4109	3081	2054	-	891
94	34.4	Q(Btu/h)	44520	44520	33390	22260	-	15900	42000	42000	31500	21000	-	15000	39522	39522	29642	19761	-	14115	37086	37086	27815	18543	-	13245
		W	4233	4233	3175	2117	-	918	4150	4150	3113	2075	-	900	4075	4075	3056	2038	-	884	3976	3976	2982	1988	-	862
90	32.2	Q(Btu/h)	45150	45150	33863	22575	-	16125	42504	42504	31878	21252	-	15180	40026	40026	30020	20013	-	14295	37590	37590	28193	18795	-	13425
		W	4109	4109	3081	2054	-	891	4026	4026	3019	2013	-	873	3943	3943	2957	1971	-	855	3864	3864	2898	1932	-	838
86	30.0	Q(Btu/h)	45738	45738	34304	22869	-	16335	43134	43134	32351	21567	-	15405	40572	40572	30429	20286	-	14490	38094	38094	28571	19047	-	13605
		W	3996	3996	2997	1998	-	867	3922	3922	2941	1961	-	851	3843	3843	2882	1921	-	833	3760	3760	2820	1880	-	815
82	27.8	Q(Btu/h)	46158	46158	34619	23079	-	16485	43512	43512	32634	21756	-	15540	40866	40866	30650	20433	-	14595	38388	38388	28791	19194	-	13710
		W	3926	3926	2944	1963	-	851	3843	3843	2882	1921	-	833	3739	3739	2804	1870	-	811	3677	3677	2758	1838	-	797
78	25.6	Q(Btu/h)	46578	46578	34934	23289	-	16635	43932	43932	32949	21966	-	15690	41328	41328	30996	20664	-	14760	38724	38724	29043	19362	-	13830
		W	3830	3830	2873	1915	-	831	3756	3756	2817	1878	-	815	3673	3673	2755	1836	-	797	3581	3581	2686	1791	-	777
74	23.3	Q(Btu/h)	46788	46788	35091	23394	-	16710	44142	44142	33107	22071	-	15765	41664	41664	31248	20832	-	14880	39018	39018	29264	19509	-	13935
		W	3760	3760	2820	1880	-	815	3677	3677	2758	1838	-	797	3594	3594	2695	1797	-	779	3515	3515	2636	1758	-	762
70	21.1	Q(Btu/h)	46998	46998	35249	23499	-	16785	44310	44310	33233	22155	-	15825	41874	41874	31406	20937	-	14955	39228	39228	29421	19614	-	14010
		W	3698	3698	2773	1849	-	802	3615	3615	2711	1807	-	784	3532	3532	2649	1766	-	766	3453	3453	2590	1726	-	749
66	18.9	Q(Btu/h)	47292	47292	35469	23646	-	16890	44730	44730	33548	22365	-	15975	42084	42084	31563	21042	-	15030	39648	39648	29736	19824	-	14160
		W	3635	3635	2727	1818	-	788	3552	3552	2664	1776	-	770	3474	3474	2605	1737	-	753	3391	3391	2543	1695	-	735
62	16.7	Q(Btu/h)	47376	47376	35532	23688	-	16920	44856	44856	33642	22428	-	16020	42294	42294	31721	21147	-	15105	39816	39816	29862	19908	-	14220
		W	3594	3594	2695	1797	-	779	3532	3532	2649	1766	-	766	3432	3432	2574	1716	-	744	3349	3349	2512	1675	-	726
58	14.4	Q(Btu/h)	47544	47544	35658	23772	-	16980	44940	44940	33705	22470	-	16050	42252	42252	31689	21126	-	15090	39774	39774	29831	19887	-	14205
		W	3548	3548	2661	1774	-	770	3461	3461	2596	1731	-	751	3378	3378	2534	1689	-	733	3287	3287	2465	1643	-	713
54	12.2	Q(Btu/h)	47712	47712	35784	23856	-	17040	45150	45150	33863	22575	-	16125	42504	42504	31878	21252	-	15180	40026	40026	30020	20013	-	14295
		W	3532	3532	2649	1766	-	766	3453	3453	2590	1726	-	749	3362	3362	2521	1681	-	729	3266	3266	2450	1633	-	708
50	10.0	Q(Btu/h)	47796	47796	35847	23898	-	17070	45234	45234	33926	22617	-	16155	42714	42714	32036	21357	-	15255	40194	40194	30146	20097	-	14355
		W	3486	3486	2615	1743	-	756	3399	3399	2549	1699	-	737	3308	3308	2481	1654	-	717	3216	3216	2412	1608	-	698
46	7.8	Q(Btu/h)	47880	47880	35910	23940	-	17100	45360	45360	34020	22680	-	16200	42798	42798	32099	21399	-	15285	40362	40362	30272	20181	-	14415
		W	3461	3461	2596	1731	-	751	3378	3378	2534	1689	-	733	3287	3287	2465	1643	-	713	3196	3196	2397	1598	-	693
42	5.6	Q(Btu/h)	47922	47922	35942	23961	-	17115	45360	45360	34020	22680	-	16200	42882	42882	32162	21441	-	15315	40404	40404	30303	20202	-	14430
		W	3453	3453	2590	1726	-	749	3366	3366	2524	1683	-	730	3266	3266	2450	1633	-	708	3171	3171	2378	1585	-	688
38	3.3	Q(Btu/h)	47922	47922	35942	23961	-	17115	45444	45444	34083	22722	-	16230	42966	42966	32225	21483	-	15345	40530	40530	30398	20265	-	14475
		W	3432	3432	2574	1716	-	744	3341	3341	2506	1670	-	725	3245	3245	2434	1623	-	704	3146	3146	2359	1573	-	682
34	1.1	Q(Btu/h)	47964	47964	35973	23982	-	17130	45486	45486	34115	22743	-	16245	43050	43050	32288	21525	-	15375	40614	40614	30461	20307	-	14505
		W	3420	3420	2565	1710	-	742	3332	3332	2499	1666	-	723	3237	3237	2428	1619	-	702	3142	3142	2356	1571	-	681
30	-1.1	Q(Btu/h)	47964	47964	35973	23982	-	17130	45486	45486	34115	22743	-	16245	43092	43092	32319	21546	-	15390	40656	40656	30492	20328	-	14520
		W	3420	3420	2565	1710	-	742	3320	3320	2490	1660	-	720	3229	3229	2422	1614	-	700	3129	3129	2347	1565	-	679
26	-3.3	Q(Btu/h)	48006	48006	36005	24003	-	17145	45570	45570	34178	22785	-	16275	43176	43176	32382	21588	-	15420	40782	40782	30587	20391	-	14565
		W	3411	3411	2558	1706	-	740	3312	3312	2484	1656	-	718	3220	3220	2415	1610	-	698	3121	3121	2341	1560	-	677
23	-5.0	Q(Btu/h)	48006	48006	36005	24003	-	17145	45612	45612	34209	22806	-	16290	43218	43218	32414	21609	-	15435	40866	40866	30650	20433	-	14595
		W	3403	3403	2552	1702	-	738	3312	3312	2484	1656	-	718	3216	3216	2412	1608	-	698	3121	3121	2341	1560	-	677
18	-7.8	Q(Btu/h)	48132	48132	36099	24066	-	17190	45738	45738	34304	22869	-	16335	43218	43218	32414	21609	-	15435	41076	41076	30807	20538	-	14670
		W	3391	3391	2543	1695	-	735	3308	3308	2481	1654	-	717	3212	3212	2409	1606	-	697	3121	3121	2341	1560	-	677
14	-10.0	Q(Btu/h)	48132	48132	36099	24066	-	17190	45738	45738	34304	22869	-	16335	43386	43386	32540	21693	-	15495	41118	41118	30839	20559	-	14685
		W	3399	3399	2549	1699	-	737	3308	3308	2481	1654	-	717	3220	3220	2415	1610	-	698	3125	3125	2344	1562	-	678
10	-12.2	Q(Btu/h)	48216	48216	36162	24108	-	17220	45738	45738	34304	22869	-	16335	43512	43512	32634	21756	-	15540	41244	41244	30933	20622	-	14730
		W	3395	3395	2546	1697	-	736	3308	3308	2481	1654	-	717	3225	3225	2418	1612	-	699	3129	3129	2347	1565	-	679
6	-14.4	Q(Btu/h)	48258	48258	36194	24129	-	17235	45906	45906	34430	22953	-	16395	43596	43596	32697	21798	-	15570	41286	41286	30965	20643	-	14745
		W	3395	3395	2546	1697	-	736	3312	3312	2484	1656	-	718	3229	3229	2422	1614	-	700	3142	3142	2356	1571	-	681
2	-16.7	Q(Btu/h)	48384	48384	36288	24192	-	17280	46074	46074	34556	23037	-	16455	43722	43722	32792	21861	-	15615	41580	41580	31185	20790	-	14850
		W	3391	3391	2543	1695	-	735	3312	3312	2484	1656	-	718	3229	3229	2422	1614	-	700	3146	3146	2359	1573	-	682
0	-17.8	Q(Btu/h)	48468	48468	36351	24234	-	17310	46158	46158	34619	23079	-	16485	43848	43848	32886	21924	-	15660	41580	41580	31185	20790	-	14850
		W	3391	3391	2543	1695	-	735	3316	3316	2487	1658	-	719	3237	3237	2428	1619	-	702	3154	3154	2366	1577	-	684

PVA-A42AA7
PUZ-A42NKA8
2) HEATING

Rated
Q(Btu/h): 46000
W: 3900

Indoor D.B.			80°F / 26.7°C						70°F / 21.1°C						60°F / 15.6°C					
Outdoor W.B.			Max	Rated	75%	50%	25%	Min	Max	Rated	75%	50%	25%	Min	Max	Rated	75%	50%	25%	Min
(°F)	(°C)																			
70	21.1	Q(Btu/h)	64656	61962	46472	30981	-	24515	66624	63848	47886	31924	-	25262	69120	66240	49680	33120	-	26208
		W	5914	5339	4004	2670	-	1479	5508	4973	3729	2486	-	1377	5132	4633	3475	2317	-	1283
65	18.3	Q(Btu/h)	61296	58742	44057	29371	-	23241	63264	60628	45471	30314	-	23988	65616	62882	47162	31441	-	24879
		W	5715	5160	3870	2580	-	1429	5305	4789	3592	2395	-	1326	4955	4473	3355	2237	-	1239
60	15.6	Q(Btu/h)	58080	55660	41745	27830	-	22022	60048	57546	43160	28773	-	22768	62256	59662	44747	29831	-	23605
		W	5460	4930	3697	2465	-	1365	5111	4614	3460	2307	-	1278	4782	4317	3238	2159	-	1196
55	12.8	Q(Btu/h)	54720	52440	39330	26220	-	20748	56688	54326	40745	27163	-	21494	58752	56304	42228	28152	-	22277
		W	5301	4785	3589	2393	-	1325	4903	4427	3320	2213	-	1226	4614	4165	3124	2083	-	1153
50	10.0	Q(Btu/h)	51408	49266	36950	24633	-	19492	53328	51106	38330	25553	-	20220	55296	52992	39744	26496	-	20966
		W	5093	4598	3449	2299	-	1273	4704	4247	3185	2124	-	1176	4450	4017	3013	2009	-	1112
47	8.3	Q(Btu/h)	49296	47242	35432	23621	-	18691	51216	49082	36812	24541	-	19419	53136	50922	38192	25461	-	20147
		W	4929	4450	3337	2225	-	1232	4575	4130	3098	2065	-	1144	4307	3888	2916	1944	-	1077
42	5.6	Q(Btu/h)	45984	44068	33051	22034	-	17436	48000	46000	34500	23000	-	18200	49824	47748	35811	23874	-	18892
		W	4618	4169	3127	2085	-	1155	4320	3900	2925	1950	-	1080	4026	3635	2726	1817	-	1007
35	1.7	Q(Btu/h)	35376	33902	25427	16951	-	13413	37872	36294	27221	18147	-	14360	40560	38870	29153	19435	-	15379
		W	4108	3709	2782	1854	-	1027	3819	3448	2586	1724	-	955	3551	3206	2404	1603	-	888
32	0.0	Q(Btu/h)	33792	32384	24288	16192	-	12813	35760	34270	25703	17135	-	13559	37152	35604	26703	17802	-	14087
		W	3892	3514	2635	1757	-	973	3586	3237	2428	1619	-	896	3348	3023	2267	1511	-	837
27	-2.8	Q(Btu/h)	32208	30866	23150	15433	-	12212	33840	32430	24323	16215	-	12831	35088	33626	25220	16813	-	13304
		W	3577	3229	2422	1615	-	894	3266	2948	2211	1474	-	816	3054	2757	2068	1379	-	764
22	-5.6	Q(Btu/h)	30816	29532	22149	14766	-	11684	32448	31096	23322	15548	-	12303	33696	32292	24219	16146	-	12776
		W	3318	2995	2246	1498	-	829	3076	2777	2083	1388	-	769	2821	2547	1910	1273	-	705
17	-8.3	Q(Btu/h)	29760	28520	21390	14260	-	11284	31344	30038	22529	15019	-	11885	32448	31096	23322	15548	-	12303
		W	3119	2816	2112	1408	-	780	2912	2629	1971	1314	-	728	2648	2391	1793	1195	-	662
12	-11.1	Q(Btu/h)	28656	27462	20597	13731	-	10865	30240	28980	21735	14490	-	11466	31440	30130	22598	15065	-	11921
		W	2912	2629	1971	1314	-	728	2756	2488	1866	1244	-	689	2536	2289	1717	1145	-	634
5	-15.0	Q(Btu/h)	27120	25990	19493	12995	-	10283	28272	27094	20321	13547	-	10720	28992	27784	20838	13892	-	10993
		W	2652	2395	1796	1197	-	663	2544	2297	1723	1149	-	636	2350	2122	1591	1061	-	588
2	-16.7	Q(Btu/h)	25872	24794	18596	12397	-	9810	26688	25576	19182	12788	-	10119	27264	26128	19596	13064	-	10338
		W	2544	2297	1723	1149	-	636	2454	2215	1661	1108	-	613	2277	2055	1541	1028	-	569
-3	-19.4	Q(Btu/h)	23376	22402	16802	11201	-	8863	24144	23138	17354	11569	-	9155	24528	23506	17630	11753	-	9300
		W	2385	2153	1615	1076	-	596	2303	2079	1559	1039	-	576	2164	1954	1465	977	-	541
-8	-22.2	Q(Btu/h)	20832	19964	14973	9982	-	7899	21504	20608	15456	10304	-	8154	21744	20838	15629	10419	-	8245
		W	2229	2012	1509	1006	-	557	2151	1942	1457	971	-	538	2052	1853	1389	926	-	513
-13	-25.0	Q(Btu/h)	18288	17526	13145	8763	-	6934	18864	18078	13559	9039	-	7153	18912	18124	13593	9062	-	7171
		W	2082	1880	1410	940	-	521	1996	1802	1351	901	-	499	1948	1759	1319	879	-	487

PCA-A42KA8
PUZ-A42NKA8
1) COOLING

Rated
Q(Btu/h): 42000
W: 4180

Indoor W.B.			72°F / 22.2°C						67°F / 19.4°C						64°F / 17.8°C						61°F / 16.1°C					
Outdoor D.B.			Max	Rated	75%	50%	25%	Min	Max	Rated	75%	50%	25%	Min	Max	Rated	75%	50%	25%	Min	Max	Rated	75%	50%	25%	Min
(°F)	(°C)																									
115	46.1	Q(Btu/h)	40572	40572	30429	20286	-	15456	38346	38346	28760	19173	-	14608	36162	36162	27122	18081	-	13776	33936	33936	25452	16968	-	12928
		W	5033	5033	3775	2516	-	1361	4932	4932	3699	2466	-	1333	4840	4840	3630	2420	-	1309	4757	4757	3568	2378	-	1286
110	43.3	Q(Btu/h)	41664	41664	31248	20832	-	15872	39312	39312	29484	19656	-	14976	36918	36918	27689	18459	-	14064	34818	34818	26114	17409	-	13264
		W	4807	4807	3605	2404	-	1300	4719	4719	3539	2360	-	1276	4636	4636	3477	2318	-	1253	4552	4552	3414	2276	-	1231
106	41.1	Q(Btu/h)	42588	42588	31941	21294	-	16224	40194	40194	30146	20097	-	15312	37758	37758	28319	18879	-	14384	35532	35532	26649	17766	-	13536
		W	4677	4677	3508	2339	-	1264	4552	4552	3414	2276	-	1231	4468	4468	3351	2234	-	1208	4389	4389	3292	2195	-	1187
102	38.9	Q(Btu/h)	43302	43302	32477	21651	-	16496	40950	40950	30713	20475	-	15600	38388	38388	28791	19194	-	14624	36036	36036	27027	18018	-	13728
		W	4531	4531	3398	2266	-	1225	4448	4448	3336	2224	-	1202	4347	4347	3260	2174	-	1175	4264	4264	3198	2132	-	1153
98	36.7	Q(Btu/h)	43932	43932	32949	21966	-	16736	41454	41454	31091	20727	-	15792	39018	39018	29264	19509	-	14864	36582	36582	27437	18291	-	13936
		W	4389	4389	3292	2195	-	1187	4305	4305	3229	2153	-	1164	4222	4222	3166	2111	-	1141	4138	4138	3104	2069	-	1119
94	34.4	Q(Btu/h)	44520	44520	33390	22260	-	16960	42000	42000	31500	21000	-	16000	39522	39522	29642	19761	-	15056	37086	37086	27815	18543	-	14128
		W	4264	4264	3198	2132	-	1153	4180	4180	3135	2090	-	1130	4105	4105	3079	2052	-	1110	4004	4004	3003	2002	-	1083
90	32.2	Q(Btu/h)	45150	45150	33863	22575	-	17200	42504	42504	31878	21252	-	16192	40026	40026	30020	20013	-	15248	37590	37590	28193	18795	-	14320
		W	4138	4138	3104	2069	-	1119	4055	4055	3041	2027	-	1096	3971	3971	2978	1986	-	1074	3892	3892	2919	1946	-	1052
86	30.0	Q(Btu/h)	45738	45738	34304	22869	-	17424	43134	43134	32351	21567	-	16432	40572	40572	30429	20286	-	15456	38094	38094	28571	19047	-	14512
		W	4025	4025	3019	2013	-	1088	3950	3950	2963	1975	-	1068	3871	3871	2903	1935	-	1046	3787	3787	2840	1894	-	1024
82	27.8	Q(Btu/h)	46158	46158	34619	23079	-	17584	43512	43512	32634	21756	-	16576	40866	40866	30650	20433	-	15568	38388	38388	28791	19194	-	14624
		W	3954	3954	2966	1977	-	1069	3871	3871	2903	1935	-	1046	3766	3766	2825	1883	-	1018	3703	3703	2778	1852	-	1001
78	25.6	Q(Btu/h)	46578	46578	34934	23289	-	17744	43932	43932	32949	21966	-	16736	41328	41328	30996	20664	-	15744	38724	38724	29043	19362	-	14752
		W	3858	3858	2894	1929	-	1043	3783	3783	2837	1891	-	1023	3699	3699	2774	1850	-	1000	3607	3607	2706	1804	-	975
74	23.3	Q(Btu/h)	46788	46788	35091	23394	-	17824	44142	44142	33107	22071	-	16816	41664	41664	31248	20832	-	15872	39018	39018	29264	19509	-	14864
		W	3787	3787	2840	1894	-	1024	3703	3703	2778	1852	-	1001	3620	3620	2715	1810	-	979	3540	3540	2655	1770	-	957
70	21.1	Q(Btu/h)	46998	46998	35249	23499	-	17904	44310	44310	33233	22155	-	16880	41874	41874	31406	20937	-	15952	39228	39228	29421	19614	-	14944
		W	3724	3724	2793	1862	-	1007	3641	3641	2731	1820	-	984	3557	3557	2668	1779	-	962	3478	3478	2608	1739	-	940
66	18.9	Q(Btu/h)	47292	47292	35469	23646	-	18016	44730	44730	33548	22365	-	17040	42084	42084	31563	21042	-	16032	39648	39648	29736	19824	-	15104
		W	3662	3662	2746	1831	-	990	3578	3578	2684	1789	-	967	3499	3499	2624	1749	-	946	3415	3415	2561	1708	-	923
62	16.7	Q(Btu/h)	47376	47376	35532	23688	-	18048	44856	44856	33642	22428	-	17088	42294	42294	31721	21147	-	16112	39816	39816	29862	19908	-	15168
		W	3620	3620	2715	1810	-	979	3557	3557	2668	1779	-	962	3457	3457	2593	1728	-	935	3373	3373	2530	1687	-	912
58	14.4	Q(Btu/h)	47544	47544	35658	23772	-	18112	44940	44940	33705	22470	-	17120	42252	42252	31689	21126	-	16096	39774	39774	29831	19887	-	15152
		W	3574	3574	2680	1787	-	966	3486	3486	2615	1743	-	942	3403	3403	2552	1701	-	920	3311	3311	2483	1655	-	895
54	12.2	Q(Btu/h)	47712	47712	35784	23856	-	18176	45150	45150	33863	22575	-	17200	42504	42504	31878	21252	-	16192	40026	40026	30020	20013	-	15248
		W	3557	3557	2668	1779	-	962	3478	3478	2608	1739	-	940	3386	3386	2539	1693	-	915	3290	3290	2467	1645	-	889
50	10.0	Q(Btu/h)	47796	47796	35847	23898	-	18208	45234	45234	33926	22617	-	17232	42714	42714	32036	21357	-	16272	40194	40194	30146	20097	-	15312
		W	3511	3511	2633	1756	-	949	3423	3423	2568	1712	-	925	3331	3331	2499	1666	-	901	3240	3240	2430	1620	-	876
46	7.8	Q(Btu/h)	47880	47880	35910	23940	-	18240	45360	45360	34020	22680	-	17280	42798	42798	32099	21399	-	16304	40362	40362	30272	20181	-	15376
		W	3486	3486	2615	1743	-	942	3403	3403	2552	1701	-	920	3311	3311	2483	1655	-	895	3219	3219	2414	1609	-	870
42	5.6	Q(Btu/h)	47922	47922	35942	23961	-	18256	45360	45360	34020	22680	-	17280	42882	42882	32162	21441	-	16336	40404	40404	30303	20202	-	15392
		W	3478	3478	2608	1739	-	940	3390	3390	2542	1695	-	916	3290	3290	2467	1645	-	889	3194	3194	2395	1597	-	863
38	3.3	Q(Btu/h)	47922	47922	35942	23961	-	18256	45444	45444	34083	22722	-	17312	42966	42966	32225	21483	-	16368	40530	40530	30398	20265	-	15440
		W	3457	3457	2593	1728	-	935	3365	3365	2524	1682	-	910	3269	3269	2452	1634	-	884	3168	3168	2376	1584	-	857
34	1.1	Q(Btu/h)	47964	47964	35973	23982	-	18272	45486	45486	34115	22743	-	17328	43050	43050	32288	21525	-	16400	40614	40614	30461	20307	-	15472
		W	3444	3444	2583	1722	-	931	3357	3357	2517	1678	-	907	3260	3260	2445	1630	-	881	3164	3164	2373	1582	-	855
30	-1.1	Q(Btu/h)	47964	47964	35973	23982	-	18272	45486	45486	34115	22743	-	17328	43092	43092	32319	21546	-	16416	40656	40656	30492	20328	-	15488
		W	3444	3444	2583	1722	-	931	3344	3344	2508	1672	-	904	3252	3252	2439	1626	-	879	3152	3152	2364	1576	-	852
26	-3.3	Q(Btu/h)	48006	48006	36005	24003	-	18288	45570	45570	34178	22785	-	17360	43176	43176	32382	21588	-	16448	40782	40782	30587	20391	-	15536
		W	3436	3436	2577	1718	-	929	3336	3336	2502	1668	-	902	3244	3244	2433	1622	-	877	3143	3143	2358	1572	-	850
23	-5.0	Q(Btu/h)	48006	48006	36005	24003	-	18288	45612	45612	34209	22806	-	17376	43218	43218	32414	21609	-	16464	40866	40866	30650	20433	-	15568
		W	3428	3428	2571	1714	-	927	3336	3336	2502	1668	-	902	3240	3240	2430	1620	-	876	3143	3143	2358	1572	-	850
18	-7.8	Q(Btu/h)	48132	48132	36099	24066	-	18336	45738	45738	34304	22869	-	17424	43218	43218	32414	21609	-	16464	41076	41076	30807	20538	-	15648
		W	3415	3415	2561	1708	-	923	3331	3331	2499	1666	-	901	3235	3235	2426	1618	-	875	3143	3143	2358	1572	-	850
14	-10.0	Q(Btu/h)	48132	48132	36099	24066	-	18336	45738	45738	34304	22869	-	17424	43386	43386	32540	21693	-	16528	41118	41118	30839	20559	-	15664
		W	3423	3423	2568	1712	-	925	3331	3331	2499	1666	-	901	3244	3244	2433	1622	-	877	3148	3148	2361	1574	-	851
10	-12.2	Q(Btu/h)	48216	48216	36162	24108	-	18368	45738	45738	34304	22869	-	17424	43512	43512	32634	21756	-	16576	41244	41244	30933	20622	-	15712
		W	3419	3419	2564	1710	-	924	3331	3331	2499	1666	-	901	3248	3248	2436	1624	-	878	3152	3152	2364	1576	-	852
6	-14.4	Q(Btu/h)	48258	48258	36194	24129	-	18384	45906	45906	34430	22953	-	17488	43596	43596	32697	21798	-	16608	41286	41286	30965	20643	-	15728
		W	3419	3419	2564	1710	-	924	3336	3336	2502	1668	-	902	3252	3252	2439	1626	-	879	3164	3164	2373	1582	-	855
2	-16.7	Q(Btu/h)	48384	48384	36288	24192	-	18432	46074	46074	34556	23037	-	17552	43722	43722	32792	21861	-	16656	41580	41580	31185	20790	-	15840
		W	3415	3415	2561	1708	-	923	3336	3336	2502	1668	-	902	3252	3252	2439	1626	-	879	3168	3168	2376	1584	-	857
0	-17.8	Q(Btu/h)	48468	48468	36351	24234	-	18464	46158	46158	34619	23079	-	17584	43848	43848	32886	21924	-	16704	41580	41580	31185	20790	-	15840
		W	3415	3415	2561	1708	-	923	3340	3340	2505	1670	-	903	3260	3260	2445	1630	-	881	3177	3177	2383	1588	-	859

PCA-A42KA8
PUZ-A42NKA8
2) HEATING

Rated
Q(Btu/h): 45000
W: 3480

Indoor D.B.			80°F / 26.7°C						70°F / 21.1°C						60°F / 15.6°C					
Outdoor W.B.			Max	Rated	75%	50%	25%	Min	Max	Rated	75%	50%	25%	Min	Max	Rated	75%	50%	25%	Min
(°F)	(°C)																			
70	21.1	Q(Btu/h)	64656	60615	45461	30308	-	21148	66624	62460	46845	31230	-	21792	69120	64800	48600	32400	-	22608
		W	5887	4764	3573	2382	-	1314	5483	4437	3328	2219	-	1224	5108	4134	3101	2067	-	1140
65	18.3	Q(Btu/h)	61296	57465	43099	28733	-	20049	63264	59310	44483	29655	-	20693	65616	61515	46136	30758	-	21462
		W	5689	4604	3453	2302	-	1270	5280	4273	3205	2137	-	1179	4932	3992	2994	1996	-	1101
60	15.6	Q(Btu/h)	58080	54450	40838	27225	-	18997	60048	56295	42221	28148	-	19641	62256	58365	43774	29183	-	20363
		W	5435	4399	3299	2199	-	1213	5087	4117	3088	2058	-	1136	4760	3852	2889	1926	-	1063
55	12.8	Q(Btu/h)	54720	51300	38475	25650	-	17898	56688	53145	39859	26573	-	18542	58752	55080	41310	27540	-	19217
		W	5276	4270	3202	2135	-	1178	4881	3950	2962	1975	-	1090	4592	3717	2787	1858	-	1025
50	10.0	Q(Btu/h)	51408	48195	36146	24098	-	16815	53328	49995	37496	24998	-	17443	55296	51840	38880	25920	-	18086
		W	5070	4103	3077	2051	-	1132	4683	3790	2842	1895	-	1045	4429	3584	2688	1792	-	989
47	8.3	Q(Btu/h)	49296	46215	34661	23108	-	16124	51216	48015	36011	24008	-	16752	53136	49815	37361	24908	-	17380
		W	4906	3971	2978	1985	-	1095	4554	3685	2764	1843	-	1017	4287	3470	2602	1735	-	957
42	5.6	Q(Btu/h)	45984	43110	32333	21555	-	15041	48000	45000	33750	22500	-	15700	49824	46710	35033	23355	-	16297
		W	4597	3720	2790	1860	-	1026	4300	3480	2610	1740	-	960	4008	3243	2433	1622	-	895
35	1.7	Q(Btu/h)	35376	33165	24874	16583	-	11571	37872	35505	26629	17753	-	12387	40560	38025	28519	19013	-	13267
		W	4089	3309	2482	1655	-	913	3801	3076	2307	1538	-	849	3535	2861	2145	1430	-	789
32	0.0	Q(Btu/h)	33792	31680	23760	15840	-	11053	35760	33525	25144	16763	-	11697	37152	34830	26123	17415	-	12152
		W	3874	3135	2352	1568	-	865	3569	2888	2166	1444	-	797	3333	2697	2023	1349	-	744
27	-2.8	Q(Btu/h)	32208	30195	22646	15098	-	10535	33840	31725	23794	15863	-	11069	35088	32895	24671	16448	-	11477
		W	3560	2881	2161	1441	-	795	3251	2631	1973	1315	-	726	3040	2460	1845	1230	-	679
22	-5.6	Q(Btu/h)	30816	28890	21668	14445	-	10079	32448	30420	22815	15210	-	10613	33696	31590	23693	15795	-	11021
		W	3302	2673	2004	1336	-	737	3062	2478	1858	1239	-	684	2808	2272	1704	1136	-	627
17	-8.3	Q(Btu/h)	29760	27900	20925	13950	-	9734	31344	29385	22039	14693	-	10252	32448	30420	22815	15210	-	10613
		W	3105	2513	1884	1256	-	693	2898	2346	1759	1173	-	647	2636	2133	1600	1067	-	588
12	-11.1	Q(Btu/h)	28656	26865	20149	13433	-	9373	30240	28350	21263	14175	-	9891	31440	29475	22106	14738	-	10284
		W	2898	2346	1759	1173	-	647	2743	2220	1665	1110	-	612	2524	2043	1532	1021	-	564
5	-15.0	Q(Btu/h)	27120	25425	19069	12713	-	8871	28272	26505	19879	13253	-	9247	28992	27180	20385	13590	-	9483
		W	2640	2137	1603	1068	-	589	2533	2050	1537	1025	-	565	2339	1893	1420	947	-	522
2	-16.7	Q(Btu/h)	25872	24255	18191	12128	-	8462	26688	25020	18765	12510	-	8729	27264	25560	19170	12780	-	8918
		W	2533	2050	1537	1025	-	565	2442	1977	1482	988	-	545	2266	1834	1375	917	-	506
-3	-19.4	Q(Btu/h)	23376	21915	16436	10958	-	7646	24144	22635	16976	11318	-	7897	24528	22995	17246	11498	-	8023
		W	2374	1921	1441	960	-	530	2292	1855	1391	927	-	512	2154	1743	1308	872	-	481
-8	-22.2	Q(Btu/h)	20832	19530	14648	9765	-	6814	21504	20160	15120	10080	-	7034	21744	20385	15289	10193	-	7112
		W	2219	1796	1347	898	-	495	2141	1733	1300	867	-	478	2043	1653	1240	827	-	456
-13	-25.0	Q(Btu/h)	18288	17145	12859	8573	-	5982	18864	17685	13264	8843	-	6170	18912	17730	13298	8865	-	6186
		W	2073	1677	1258	839	-	463	1987	1608	1206	804	-	444	1939	1569	1177	785	-	433

PEAD-A42AA9
PUZ-A42NKA8
1) COOLING

Rated
Q(Btu/h): 42000
W: 3900

Indoor W.B.			72°F / 22.2°C						67°F / 19.4°C						64°F / 17.8°C						61°F / 16.1°C					
Outdoor D.B.			Max	Rated	75%	50%	25%	Min	Max	Rated	75%	50%	25%	Min	Max	Rated	75%	50%	25%	Min	Max	Rated	75%	50%	25%	Min
(°F)	(°C)																									
115	46.1	Q(Btu/h)	40572	40572	30429	20286	-	15456	38346	38346	28760	19173	-	14608	36162	36162	27122	18081	-	13776	33936	33936	25452	16968	-	12928
		W	4696	4696	3522	2348	-	1228	4602	4602	3452	2301	-	1204	4516	4516	3387	2258	-	1181	4438	4438	3329	2219	-	1161
110	43.3	Q(Btu/h)	41664	41664	31248	20832	-	15872	39312	39312	29484	19656	-	14976	36918	36918	27689	18459	-	14064	34818	34818	26114	17409	-	13264
		W	4485	4485	3364	2243	-	1173	4403	4403	3302	2202	-	1152	4325	4325	3244	2163	-	1131	4247	4247	3185	2124	-	1111
106	41.1	Q(Btu/h)	42588	42588	31941	21294	-	16224	40194	40194	30146	20097	-	15312	37758	37758	28319	18879	-	14384	35532	35532	26649	17766	-	13536
		W	4364	4364	3273	2182	-	1141	4247	4247	3185	2124	-	1111	4169	4169	3127	2085	-	1090	4095	4095	3071	2048	-	1071
102	38.9	Q(Btu/h)	43302	43302	32477	21651	-	16496	40950	40950	30713	20475	-	15600	38388	38388	28791	19194	-	14624	36036	36036	27027	18018	-	13728
		W	4228	4228	3171	2114	-	1106	4150	4150	3112	2075	-	1085	4056	4056	3042	2028	-	1061	3978	3978	2984	1989	-	1040
98	36.7	Q(Btu/h)	43932	43932	32949	21966	-	16736	41454	41454	31091	20727	-	15792	39018	39018	29264	19509	-	14864	36582	36582	27437	18291	-	13936
		W	4095	4095	3071	2048	-	1071	4017	4017	3013	2009	-	1051	3939	3939	2954	1970	-	1030	3861	3861	2896	1931	-	1010
94	34.4	Q(Btu/h)	44520	44520	33390	22260	-	16960	42000	42000	31500	21000	-	16000	39522	39522	29642	19761	-	15056	37086	37086	27815	18543	-	14128
		W	3978	3978	2984	1989	-	1040	3900	3900	2925	1950	-	1020	3830	3830	2872	1915	-	1002	3736	3736	2802	1868	-	977
90	32.2	Q(Btu/h)	45150	45150	33863	22575	-	17200	42504	42504	31878	21252	-	16192	40026	40026	30020	20013	-	15248	37590	37590	28193	18795	-	14320
		W	3861	3861	2896	1931	-	1010	3783	3783	2837	1892	-	989	3705	3705	2779	1853	-	969	3631	3631	2723	1815	-	950
86	30.0	Q(Btu/h)	45738	45738	34304	22869	-	17424	43134	43134	32351	21567	-	16432	40572	40572	30429	20286	-	15456	38094	38094	28571	19047	-	14512
		W	3756	3756	2817	1878	-	982	3686	3686	2764	1843	-	964	3611	3611	2709	1806	-	945	3533	3533	2650	1767	-	924
82	27.8	Q(Btu/h)	46158	46158	34619	23079	-	17584	43512	43512	32634	21756	-	16576	40866	40866	30650	20433	-	15568	38388	38388	28791	19194	-	14624
		W	3689	3689	2767	1845	-	965	3611	3611	2709	1806	-	945	3514	3514	2635	1757	-	919	3455	3455	2592	1728	-	904
78	25.6	Q(Btu/h)	46578	46578	34934	23289	-	17744	43932	43932	32949	21966	-	16736	41328	41328	30996	20664	-	15744	38724	38724	29043	19362	-	14752
		W	3600	3600	2700	1800	-	941	3530	3530	2647	1765	-	923	3452	3452	2589	1726	-	903	3366	3366	2524	1683	-	880
74	23.3	Q(Btu/h)	46788	46788	35091	23394	-	17824	44142	44142	33107	22071	-	16816	41664	41664	31248	20832	-	15872	39018	39018	29264	19509	-	14864
		W	3533	3533	2650	1767	-	924	3455	3455	2592	1728	-	904	3377	3377	2533	1689	-	883	3303	3303	2477	1652	-	864
70	21.1	Q(Btu/h)	46998	46998	35249	23499	-	17904	44310	44310	33233	22155	-	16880	41874	41874	31406	20937	-	15952	39228	39228	29421	19614	-	14944
		W	3475	3475	2606	1737	-	909	3397	3397	2548	1698	-	888	3319	3319	2489	1659	-	868	3245	3245	2434	1622	-	849
66	18.9	Q(Btu/h)	47292	47292	35469	23646	-	18016	44730	44730	33548	22365	-	17040	42084	42084	31563	21042	-	16032	39648	39648	29736	19824	-	15104
		W	3416	3416	2562	1708	-	894	3338	3338	2504	1669	-	873	3264	3264	2448	1632	-	854	3186	3186	2390	1593	-	833
62	16.7	Q(Btu/h)	47376	47376	35532	23688	-	18048	44856	44856	33642	22428	-	17088	42294	42294	31721	21147	-	16112	39816	39816	29862	19908	-	15168
		W	3377	3377	2533	1689	-	883	3319	3319	2489	1659	-	868	3225	3225	2419	1613	-	844	3147	3147	2360	1574	-	823
58	14.4	Q(Btu/h)	47544	47544	35658	23772	-	18112	44940	44940	33705	22470	-	17120	42252	42252	31689	21126	-	16096	39774	39774	29831	19887	-	15152
		W	3335	3335	2501	1667	-	872	3253	3253	2439	1626	-	851	3175	3175	2381	1587	-	830	3089	3089	2317	1544	-	808
54	12.2	Q(Btu/h)	47712	47712	35784	23856	-	18176	45150	45150	33863	22575	-	17200	42504	42504	31878	21252	-	16192	40026	40026	30020	20013	-	15248
		W	3319	3319	2489	1659	-	868	3245	3245	2434	1622	-	849	3159	3159	2369	1580	-	826	3069	3069	2302	1535	-	803
50	10.0	Q(Btu/h)	47796	47796	35847	23898	-	18208	45234	45234	33926	22617	-	17232	42714	42714	32036	21357	-	16272	40194	40194	30146	20097	-	15312
		W	3276	3276	2457	1638	-	857	3194	3194	2396	1597	-	835	3108	3108	2331	1554	-	813	3023	3023	2267	1511	-	791
46	7.8	Q(Btu/h)	47880	47880	35910	23940	-	18240	45360	45360	34020	22680	-	17280	42798	42798	32099	21399	-	16304	40362	40362	30272	20181	-	15376
		W	3253	3253	2439	1626	-	851	3175	3175	2381	1587	-	830	3089	3089	2317	1544	-	808	3003	3003	2252	1502	-	785
42	5.6	Q(Btu/h)	47922	47922	35942	23961	-	18256	45360	45360	34020	22680	-	17280	42882	42882	32162	21441	-	16336	40404	40404	30303	20202	-	15392
		W	3245	3245	2434	1622	-	849	3163	3163	2372	1581	-	827	3069	3069	2302	1535	-	803	2980	2980	2235	1490	-	779
38	3.3	Q(Btu/h)	47922	47922	35942	23961	-	18256	45444	45444	34083	22722	-	17312	42966	42966	32225	21483	-	16368	40530	40530	30398	20265	-	15440
		W	3225	3225	2419	1613	-	844	3140	3140	2355	1570	-	821	3050	3050	2287	1525	-	798	2956	2956	2217	1478	-	773
34	1.1	Q(Btu/h)	47964	47964	35973	23982	-	18272	45486	45486	34115	22743	-	17328	43050	43050	32288	21525	-	16400	40614	40614	30461	20307	-	15472
		W	3214	3214	2410	1607	-	840	3132	3132	2349	1566	-	819	3042	3042	2282	1521	-	796	2952	2952	2214	1476	-	772
30	-1.1	Q(Btu/h)	47964	47964	35973	23982	-	18272	45486	45486	34115	22743	-	17328	43092	43092	32319	21546	-	16416	40656	40656	30492	20328	-	15488
		W	3214	3214	2410	1607	-	840	3120	3120	2340	1560	-	816	3034	3034	2276	1517	-	794	2941	2941	2205	1470	-	769
26	-3.3	Q(Btu/h)	48006	48006	36005	24003	-	18288	45570	45570	34178	22785	-	17360	43176	43176	32382	21588	-	16448	40782	40782	30587	20391	-	15536
		W	3206	3206	2404	1603	-	838	3112	3112	2334	1556	-	814	3026	3026	2270	1513	-	792	2933	2933	2200	1466	-	767
23	-5.0	Q(Btu/h)	48006	48006	36005	24003	-	18288	45612	45612	34209	22806	-	17376	43218	43218	32414	21609	-	16464	40866	40866	30650	20433	-	15568
		W	3198	3198	2399	1599	-	836	3112	3112	2334	1556	-	814	3023	3023	2267	1511	-	791	2933	2933	2200	1466	-	767
18	-7.8	Q(Btu/h)	48132	48132	36099	24066	-	18336	45738	45738	34304	22869	-	17424	43218	43218	32414	21609	-	16464	41076	41076	30807	20538	-	15648
		W	3186	3186	2390	1593	-	833	3108	3108	2331	1554	-	813	3019	3019	2264	1509	-	789	2933	2933	2200	1466	-	767
14	-10.0	Q(Btu/h)	48132	48132	36099	24066	-	18336	45738	45738	34304	22869	-	17424	43386	43386	32540	21693	-	16528	41118	41118	30839	20559	-	15664
		W	3194	3194	2396	1597	-	835	3108	3108	2331	1554	-	813	3026	3026	2270	1513	-	792	2937	2937	2203	1468	-	768
10	-12.2	Q(Btu/h)	48216	48216	36162	24108	-	18368	45738	45738	34304	22869	-	17424	43512	43512	32634	21756	-	16576	41244	41244	30933	20622	-	15712
		W	3190	3190	2393	1595	-	834	3108	3108	2331	1554	-	813	3030	3030	2273	1515	-	793	2941	2941	2205	1470	-	769
6	-14.4	Q(Btu/h)	48258	48258	36194	24129	-	18384	45906	45906	34430	22953	-	17488	43596	43596	32697	21798	-	16608	41286	41286	30965	20643	-	15728
		W	3190	3190	2393	1595	-	834	3112	3112	2334	1556	-	814	3034	3034	2276	1517	-	794	2952	2952	2214	1476	-	772
2	-16.7	Q(Btu/h)	48384	48384	36288	24192	-	18432	46074	46074	34556	23037	-	17552	43722	43722	32792	21861	-	16656	41580	41580	31185	20790	-	15840
		W	3186	3186	2390	1593	-	833	3112	3112	2334	1556	-	814	3034	3034	2276	1517	-	794	2956	2956	2217	1478	-	773
0	-17.8	Q(Btu/h)	48468	48468	36351	24234	-	18464	46158	46158	34619	23079	-	17584	43848	43848	32886	21924	-	16704	41580	41580	31185	20790	-	15840
		W	3186	3186	2390	1593	-	833	3116	3116	2337	1558	-	815	3042	3042	2282	1521	-	796	2964	2964	2223	1482	-	775

PEAD-A42AA9
PUZ-A42NKA8
2) HEATING

Rated
Q(Btu/h): 45000
W: 3340

Indoor D.B.			80°F / 26.7°C						70°F / 21.1°C						60°F / 15.6°C					
Outdoor W.B.			Max	Rated	75%	50%	25%	Min	Max	Rated	75%	50%	25%	Min	Max	Rated	75%	50%	25%	Min
(°F)	(°C)																			
70	21.1	Q(Btu/h)	64656	60615	45461	30308	-	20609	66624	62460	46845	31230	-	21236	69120	64800	48600	32400	-	22032
		W	5134	4572	3429	2286	-	1287	4781	4259	3194	2129	-	1199	4455	3968	2976	1984	-	1117
65	18.3	Q(Btu/h)	61296	57465	43099	28733	-	19538	63264	59310	44483	29655	-	20165	65616	61515	46136	30758	-	20915
		W	4961	4419	3314	2209	-	1244	4605	4102	3076	2051	-	1154	4301	3831	2873	1915	-	1078
60	15.6	Q(Btu/h)	58080	54450	40838	27225	-	18513	60048	56295	42221	28148	-	19140	62256	58365	43774	29183	-	19844
		W	4740	4222	3166	2111	-	1188	4436	3951	2963	1976	-	1112	4151	3697	2773	1849	-	1041
55	12.8	Q(Btu/h)	54720	51300	38475	25650	-	17442	56688	53145	39859	26573	-	18069	58752	55080	41310	27540	-	18727
		W	4601	4098	3074	2049	-	1153	4256	3791	2843	1895	-	1067	4005	3567	2675	1784	-	1004
50	10.0	Q(Btu/h)	51408	48195	36146	24098	-	16386	53328	49995	37496	24998	-	16998	55296	51840	38880	25920	-	17626
		W	4421	3938	2953	1969	-	1108	4084	3637	2728	1819	-	1024	3863	3440	2580	1720	-	968
47	8.3	Q(Btu/h)	49296	46215	34661	23108	-	15713	51216	48015	36011	24008	-	16325	53136	49815	37361	24908	-	16937
		W	4279	3811	2858	1905	-	1073	3971	3537	2653	1769	-	995	3739	3330	2497	1665	-	937
42	5.6	Q(Btu/h)	45984	43110	32333	21555	-	14657	48000	45000	33750	22500	-	15300	49824	46710	35033	23355	-	15881
		W	4009	3570	2678	1785	-	1005	3750	3340	2505	1670	-	940	3495	3113	2335	1556	-	876
35	1.7	Q(Btu/h)	35376	33165	24874	16583	-	11276	37872	35505	26629	17753	-	12072	40560	38025	28519	19013	-	12929
		W	3566	3176	2382	1588	-	894	3315	2953	2214	1476	-	831	3083	2745	2059	1373	-	773
32	0.0	Q(Btu/h)	33792	31680	23760	15840	-	10771	35760	33525	25144	16763	-	11399	37152	34830	26123	17415	-	11842
		W	3379	3009	2257	1505	-	847	3113	2772	2079	1386	-	780	2906	2589	1941	1294	-	729
27	-2.8	Q(Btu/h)	32208	30195	22646	15098	-	10266	33840	31725	23794	15863	-	10787	35088	32895	24671	16448	-	11184
		W	3105	2766	2074	1383	-	778	2835	2525	1894	1263	-	711	2651	2361	1771	1181	-	665
22	-5.6	Q(Btu/h)	30816	28890	21668	14445	-	9823	32448	30420	22815	15210	-	10343	33696	31590	23693	15795	-	10741
		W	2880	2565	1924	1283	-	722	2670	2378	1784	1189	-	669	2449	2181	1636	1091	-	614
17	-8.3	Q(Btu/h)	29760	27900	20925	13950	-	9486	31344	29385	22039	14693	-	9991	32448	30420	22815	15210	-	10343
		W	2708	2411	1809	1206	-	679	2528	2251	1688	1126	-	634	2299	2047	1536	1024	-	576
12	-11.1	Q(Btu/h)	28656	26865	20149	13433	-	9134	30240	28350	21263	14175	-	9639	31440	29475	22106	14738	-	10022
		W	2528	2251	1688	1126	-	634	2393	2131	1598	1065	-	600	2201	1961	1470	980	-	552
5	-15.0	Q(Btu/h)	27120	25425	19069	12713	-	8645	28272	26505	19879	13253	-	9012	28992	27180	20385	13590	-	9241
		W	2303	2051	1538	1025	-	577	2209	1967	1475	984	-	554	2040	1817	1363	908	-	511
2	-16.7	Q(Btu/h)	25872	24255	18191	12128	-	8247	26688	25020	18765	12510	-	8507	27264	25560	19170	12780	-	8690
		W	2209	1967	1475	984	-	554	2130	1897	1423	949	-	534	1976	1760	1320	880	-	495
-3	-19.4	Q(Btu/h)	23376	21915	16436	10958	-	7451	24144	22635	16976	11318	-	7696	24528	22995	17246	11498	-	7818
		W	2070	1844	1383	922	-	519	1999	1780	1335	890	-	501	1879	1673	1255	837	-	471
-8	-22.2	Q(Btu/h)	20832	19530	14648	9765	-	6640	21504	20160	15120	10080	-	6854	21744	20385	15289	10193	-	6931
		W	1935	1723	1293	862	-	485	1868	1663	1247	832	-	468	1781	1587	1190	793	-	447
-13	-25.0	Q(Btu/h)	18288	17145	12859	8573	-	5829	18864	17685	13264	8843	-	6013	18912	17730	13298	8865	-	6028
		W	1808	1610	1207	805	-	453	1733	1543	1157	772	-	434	1691	1506	1130	753	-	424

MITSUBISHI ELECTRIC CORPORATION
HEAD OFFICE: TOKYO BUILDING, 2-7-3, MARUNOUCHI, CHIYODA-KU, TOKYO 100-8,310, JAPAN

©Copyright 2024 MITSUBISHI ELECTRIC CORPORATION
Published: Mar. 2024 No. OCD764
Made in Japan

Specifications subject to change without notice