MITSUBISHI ELECTRIC

SPLIT-SYSTEM HEAT PUMP

December 2014

No. OCB584

PARTS CATALOG

Series PKA **Wall Mounted** **R410A**

Indoor unit [Model Name]	[Service Ref.]
PKA-A24KA6	PKA-A24KA6.TH
PKA-A30KA6	PKA-A30KA6.TH
PKA-A36KA6	PKA-A36KA6.TH

Note:
- RoHS compliant products have <G> mark on the spec name plate.

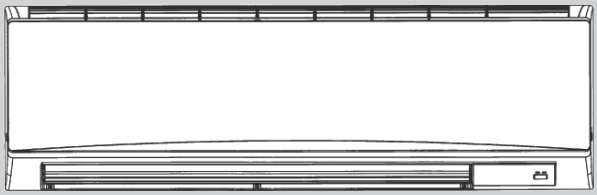

INDOOR UNIT

CONTENTS

1. RoHS PARTS LIST 2

SERVICE MANUAL (OCH584)

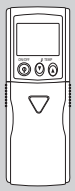

IR WIRELESS REMOTE CONTROLLER (Option)

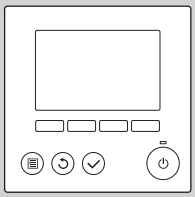

WIRED REMOTE CONTROLLER (Option)

Mr.SLIM

1 RoHS PARTS LIST

PANEL AND HEAT EXCHANGER PARTS
PKA-A24KA6.TH PKA-A30KA6.TH PKA-A36KA6.TH

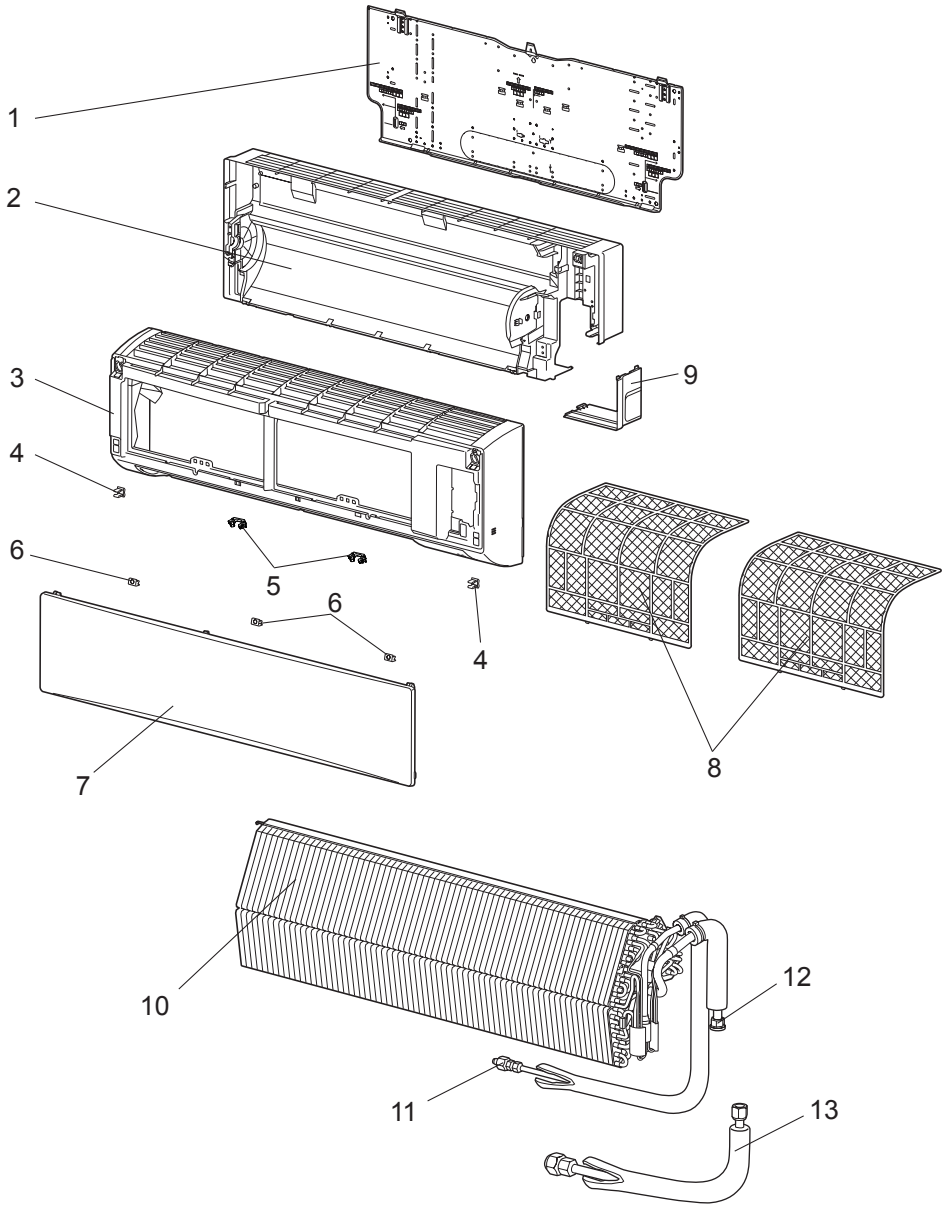

RoHS PARTS LIST

No.	RoHS	Parts No.	Parts Name	Specification	Q'ty/ unit PKA-A•KA6.TH		Remarks (Drawing No.)	Wiring Diagram Symbol	Recom-mended Q'ty
					24, 30	36			
1	G	E12 C92 970	INSTALLATION PLATE		1	1			
2	G	E12 D20 234	BOX		1	1			
3	G	E17 B04 000	PANEL ASSEMBLY		1	1			
4	G	E12 408 142	CATCH		2	2	2 pcs/ set		
5	G	E12 C92 142	CATCH		2	2	2 pcs/ set		
6	G	E12 C92 067	SCREW CAP		3	3	3 pcs/ set		
7	G	E17 B04 010	FRONT PANEL (NW)		1	1			
8	G	E12 C92 100	CATECHIN AIR FILTER		2	2	1 pc/ set		
9	G	E12 C92 975	CORNER BOX R		1	1			
10	G	E17 520 620	HEAT EXCHANGER		1				
	G	E17 522 620	HEAT EXCHANGER			1			
11	G	E12 527 667	UNION (LIQ)		1	1			
12	G	E12 C92 666	UNION (GAS)		1	1			
13	G	E17 518 980	JOINT ASSEMBLY		1	1			

RoHS PARTS LIST

FUNCTIONAL PARTS

PKA-A24KA6.TH **PKA-A30KA6.TH** **PKA-A36KA6.TH**

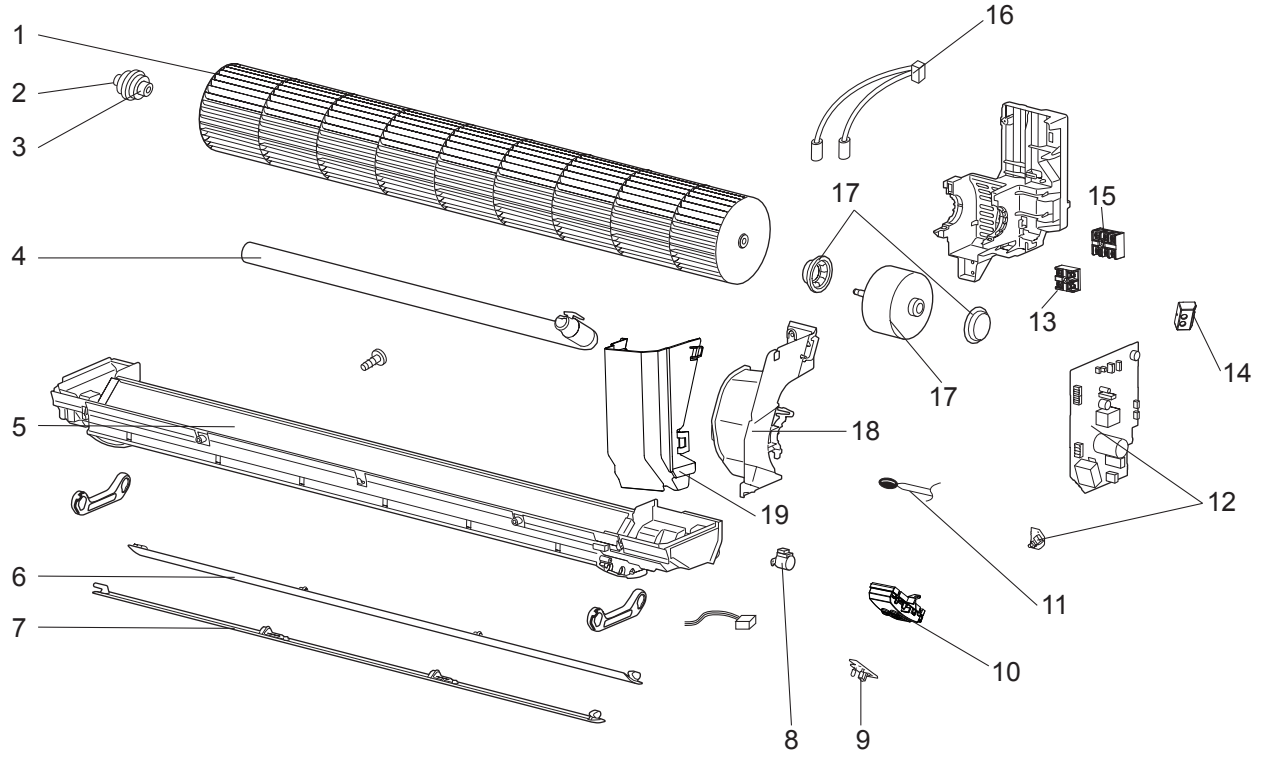

RoHS PARTS LIST

Part numbers that are circled are not shown in the illustration.

No.	RoHS	Part No.	Part Name	Specification	Q'ty/ unit PKA-A24, 30, 36 KA6.TH	Remarks (Drawing No.)	Wiring Diagram Symbol	Recom-mended Q'ty
1	G	E12 C92 302	LINE FLOW FAN		1			
2	G	E12 751 509	BEARING MOUNT		1			
3	G	E12 001 504	SLEEVE BEARING		1			
4	G	E12 408 702	DRAIN HOSE		1			
5	G	E17 515 235	NOZZLE ASSEMBLY		1			
6	G	E12 C92 040	VANE UPPER		1			
7	G	E12 C92 041	VANE LOWER		1			
8	G	E12 749 303	VANE MOTOR		1		M	
9	G	E17 518 468	RECEIVER P.C. BOARD		1		W.B.	
10	G	E12 C92 095	RECEIVER HOLDER		1			
11	G	E17 518 308	ROOM TEMP. THERMISTOR		1		TH1	
12	G	E17 B04 447	INDOOR CONTROLLER BOARD		1		I.B., S.W.	
13	G	E17 516 375	TERMINAL BLOCK	2P (1, 2)	1		TB5	
14	G	E17 518 782	SWITCH HOLDER		1			
15	G	E17 491 375	TERMINAL BLOCK	3P (S1,S2,S3)	1		TB4	
16	G	E17 491 307	THERMISTOR (PIPE)		1		TH2,TH5	
17	G	E12 C92 300	FAN MOTOR		1		MS	
18	G	E12 C92 333	MOTOR BAND		1			
19	G	E17 518 541	WATER COVER		1			
20	G	E12 784 382	FUSE	3.15A 250V	1		FUSE	

Mr.SLIM

MITSUBISHI ELECTRIC CORPORATION

HEAD OFFICE : TOKYO BLDG., 2-7-3, MARUNOUCHI, CHIYODA-KU, TOKYO 100-8310, JAPAN

©Copyright 2014 MITSUBISHI ELECTRIC CORPORATION
Distributed in Dec. 2014 No. OCB584
Made in Japan

New publication, effective Dec. 2014
Specifications are subject to change without notice.