MITSUBISHI ELECTRIC

SPLIT-TYPE AIR CONDITIONERS

Revision C:
• Some descriptions have been changed.

OBB950 REVISED EDITION-B is void.

INDOOR UNIT

No. OBB950
REVISED EDITION-C

PARTS CATALOG

Models

MSZ-GX06NL - U1, U2
MSZ-GX09NL - U1, U2
MSZ-GX12NL - U1, U2
MSZ-GX15NL - U1, U2
MSZ-GX18NL - U1, U2
MSZ-GX24NL - U1, U2
MSZ-GX30NL - U1, U2
MSZ-GX36NL - U1, U2

MSY-GX09NL - U1, U2
MSY-GX12NL - U1, U2
MSY-GX15NL - U1, U2
MSY-GX18NL - U1, U2
MSY-GX24NL - U1, U2
MSY-GX30NL - U1, U2
MSY-GX36NL - U1, U2

MSZ-GX18/24/30/36NL
MSY-GX18/24/30/36NL

CONTENTS

1. SERVICE PARTS LIST ····· 2
2. OPTIONAL PARTS ·····27

SERVICE MANUAL (OBH950)

Revision A:
• MSZ-GX06/09/12/15NL-U1 and MSY-GX09/12/15NL-U1 have been added.

Revision B:
• MSZ-GX06/09/12/15/18/24/30/36NL-U2 and MSY-GX09/12/15/18/24/30/36NL-U2 have been added.

Revision C:
• Some descriptions have been changed.

1 SERVICE PARTS LIST

MSZ-GX06NL-U1 MSZ-GX09NL-U1 MSZ-GX12NL-U1 MSZ-GX15NL-U1
MSY-GX09NL-U1 MSY-GX12NL-U1 MSY-GX15NL-U1

1-1. INDOOR UNIT STRUCTURAL PARTS

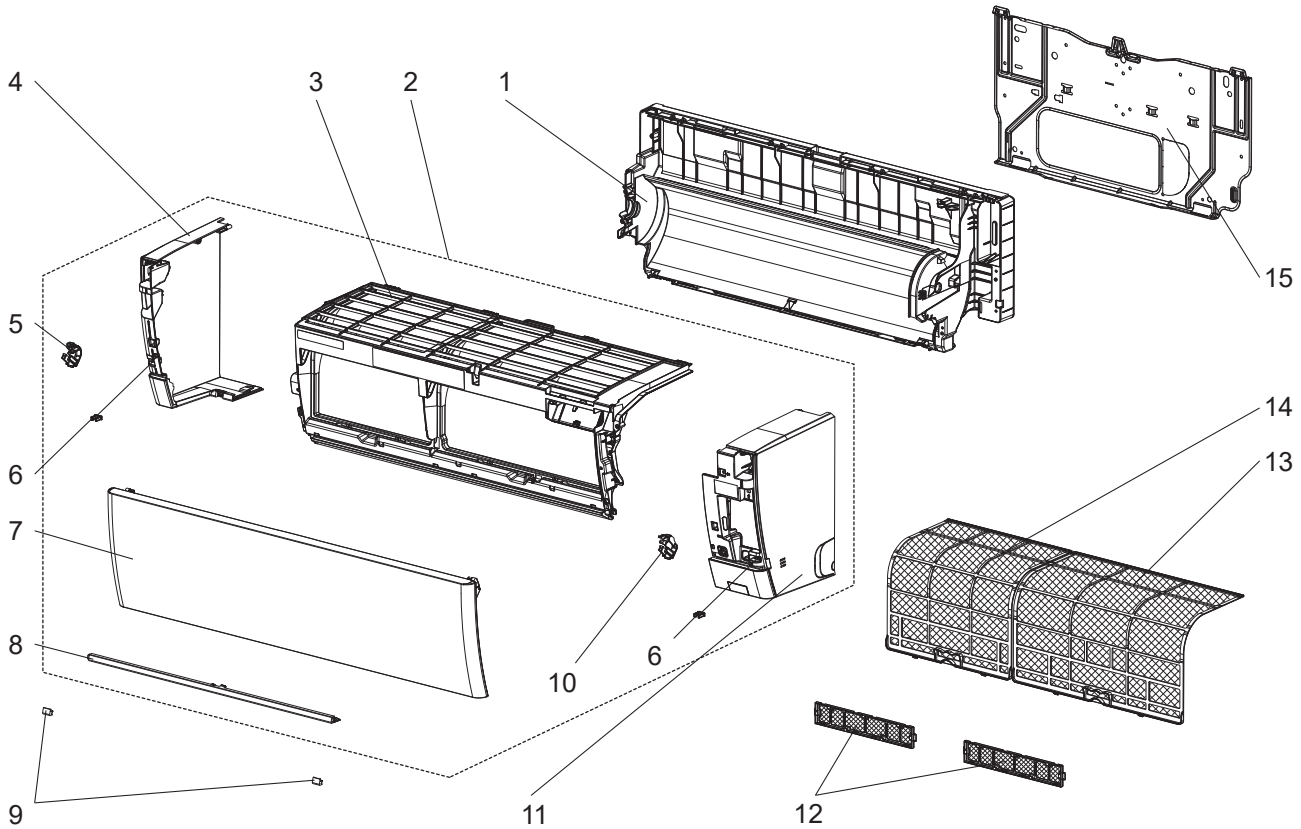

Optional parts (Refer to 2-1.)

1-2. ACCESSORY AND REMOTE CONTROLLER

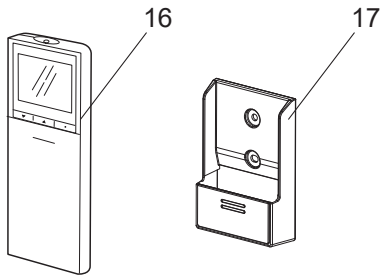

1-3. INDOOR UNIT HEAT EXCHANGER

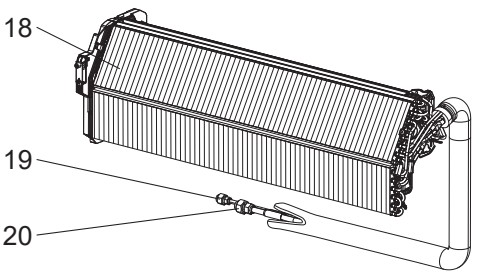

1-1. INDOOR UNIT STRUCTURAL PARTS

1. The part quantity below indicates the required number of pieces per unit.

No.	Part No.	Part Name	MSZ-GX06NL-U1	MSZ-GX09NL-U1	MSZ-GX12NL-U1	MSZ-GX15NL-U1	MSY-GX09NL-U1	MSY-GX12NL-U1	MSY-GX15NL-U1	Symbol in Wiring Diagram	Remarks
1	U01 A06 234	BOX ASSEMBLY	1	1	1	1	1	1	1		Not including SPEC NAME PLATE
2	U01 A15 000	PANEL ASSEMBLY	1	1	1	1	1	1	1		
3	U01 A06 010	PANEL (FRONT) ASSEMBLY	1	1	1	1	1	1	1		
4	U01 A20 000	PANEL (LEFT) ASSEMBLY	1	1	1	1	1	1	1		Includes No. 5, 6
5	U01 002 080	ARM HOLDER (LEFT)	1	1	1	1	1	1	1		
6	U01 A02 142	CATCH	2	2	2	2	2	2	2		2 pcs/set
7	U01 A07 010	FRONT PANEL	1	1	1	1	1	1	1		
8	U01 A21 000	PANEL (UNDER) ASSEMBLY	1	1	1	1	1	1	1		
9	U01 003 087	SCREW CAP	2	2	2	2	2	2	2		2 pcs/set
10	U01 001 080	ARM HOLDER (RIGHT)	1	1	1	1	1	1	1		
11	U01 A18 000	PANEL (RIGHT) ASSEMBLY	1	1	1	1	1	1	1		Includes No. 6, 10
12	—	AIR CLEANING FILTER (ELECTROSTATIC ANTI-ALLERGY ENZYME FILTER)	2	2	2	2	2	2	2		2 PCS/SET MAC-2320FT
13	U01 001 500	AIR FILTER_RIGHT	1	1	1	1	1	1	1		1 PC/SET
14	U01 002 500	AIR FILTER_LEFT	1	1	1	1	1	1	1		1 PC/SET
15	U01 A04 970	INSTALLATION PLATE	1	1	1	1	1	1	1		

1-2. ACCESSORY AND REMOTE CONTROLLER

1. The part quantity below indicates the required number of pieces per unit.

No.	Part No.	Part Name	MSZ-GX06NL-U1	MSZ-GX09NL-U1	MSZ-GX12NL-U1	MSZ-GX15NL-U1	MSY-GX09NL-U1	MSY-GX12NL-U1	MSY-GX15NL-U1	Symbol in Wiring Diagram	Remarks
16	U01 A26 426	REMOTE CONTROLLER	1	1	1	1					SH24H
16	U01 A27 426	REMOTE CONTROLLER					1	1	1		SH24J
17	U01 A20 426	REMOTE CONTROLLER HOLDER	1	1	1	1	1	1	1		

1-3. INDOOR UNIT HEAT EXCHANGER

1. The part quantity below indicates the required number of pieces per unit.

No.	Part No.	Part Name	MSZ-GX06NL-U1	MSZ-GX09NL-U1	MSZ-GX12NL-U1	MSZ-GX15NL-U1	MSY-GX09NL-U1	MSY-GX12NL-U1	MSY-GX15NL-U1	Symbol in Wiring Diagram	Remarks
18	U01 A10 620	INDOOR HEAT EXCHANGER	1	1	1		1	1			Includes No. 19, 20
18	U01 A11 620	INDOOR HEAT EXCHANGER				1			1		Includes No. 19, 20
19	U01 A01 667	UNION (LIQUID)	1	1	1	1	1	1	1		ø1/4 (ø6.35)
20	U01 A01 666	UNION (GAS)	1	1	1		1	1			ø3/8 (ø9.52)
20	U01 A02 666	UNION (GAS)				1			1		ø1/2 (ø12.7)

MSZ-GX06NL-U1 MSZ-GX09NL-U1 MSZ-GX12NL-U1 MSZ-GX15NL-U1
MSY-GX09NL-U1 MSY-GX12NL-U1 MSY-GX15NL-U1

1-4. INDOOR UNIT ELECTRICAL PARTS AND FUNCTIONAL PARTS

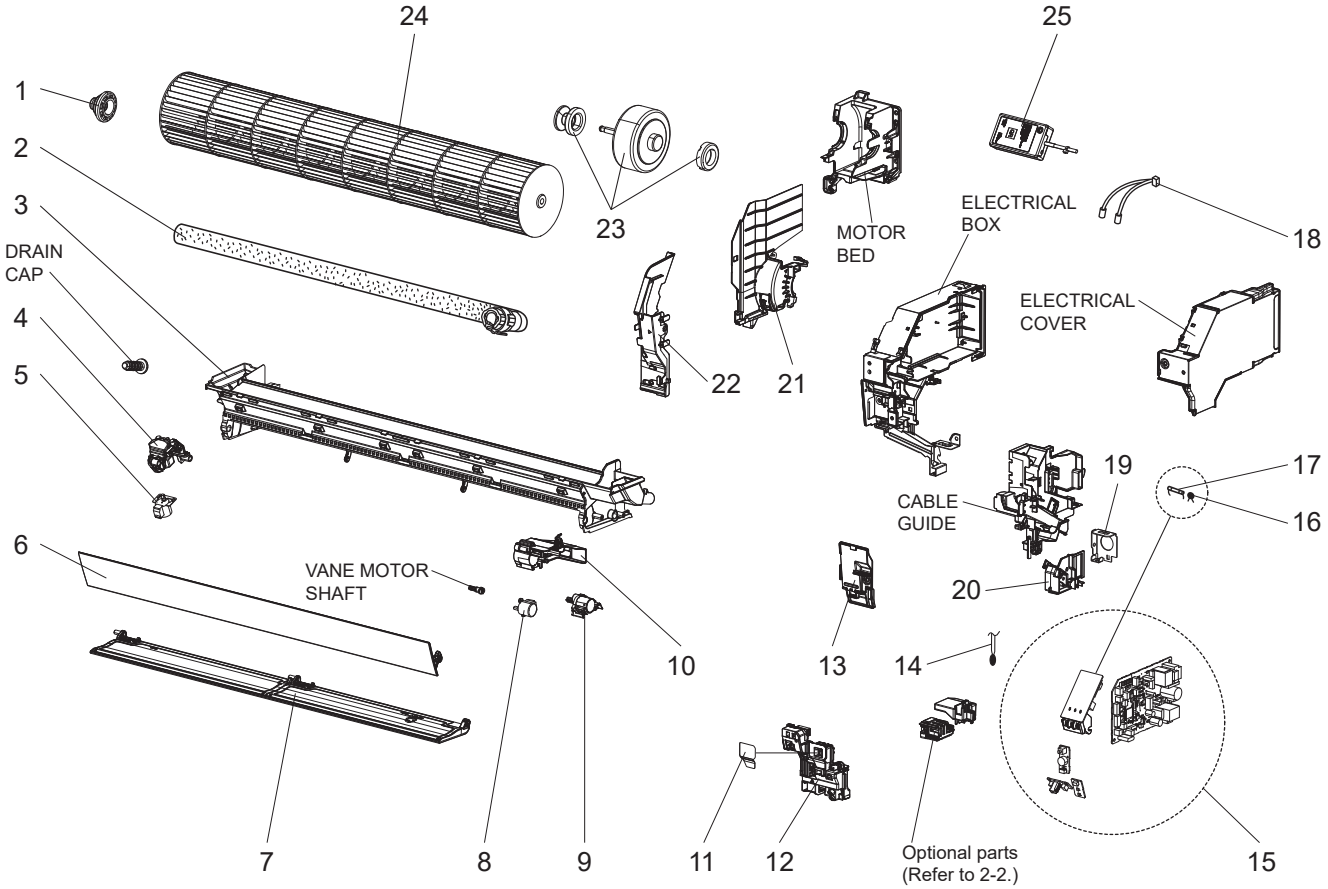

1-4. INDOOR UNIT ELECTRICAL PARTS AND FUNCTIONAL PARTS

1. The part quantity below indicates the required number of pieces per unit.
2. The circled No. indicates that the part is not shown in the figure.

No.	Part No.	Part Name	MSZ-GX06NL-U1	MSZ-GX09NL-U1	MSZ-GX12NL-U1	MSZ-GX15NL-U1	MSY-GX09NL-U1	MSY-GX12NL-U1	MSY-GX15NL-U1	Symbol in Wiring Diagram	Remarks
1	U01 A02 510	BEARING MOUNT ASSEMBLY	1	1	1	1	1	1	1		Includes sleeve bearing
2	U01 A01 702	DRAIN HOSE	1	1	1	1	1	1	1		
3	U01 A03 235	NOZZLE ASSEMBLY	1	1	1	1	1	1	1		Full assembly except DRAIN HOSE
4	U01 A02 044	VERTICAL VANE MOTOR UNIT	1	1	1	1	1	1	1		Includes MV3
5	U01 A03 044	VANE MOTOR (VERTICAL)	1	1	1	1	1	1	1	MV3	RIGHT & LEFT
6	U01 A02 040	HORIZONTAL VANE (UPPER) ASSEMBLY	1	1	1	1	1	1	1		Includes shaft
7	U01 A02 041	HORIZONTAL VANE (LOWER) ASSEMBLY	1	1	1	1	1	1	1		Includes shaft
8	U01 A01 303	VANE MOTOR (HORIZONTAL) (UPPER)	1	1	1	1	1	1	1	MV1	UP & DOWN
9	U01 A03 046	VANE MOTOR (HORIZONTAL) (LOWER)	1	1	1	1	1	1	1	MV2	UP & DOWN
10	U01 A02 046	HORIZONTAL VANE MOTOR UNIT	1	1	1	1	1	1	1		Includes MV1 & MV2
11	U01 009 987	SWITCH SHEET	1	1	1	1	1	1	1		
12	U01 A02 085	DISPLAY AND RECEIVER P.C. BOARD HOLDER ASSEMBLY	1	1	1	1	1	1	1		
13	U01 A03 784	V.A. CLAMP ASSEMBLY	1	1	1	1	1	1	1		
14	U01 A11 308	ROOM TEMPERATURE THERMISTOR	1	1	1	1	1	1	1	RT11	
15	U01 A70 452	ELECTRONIC CONTROL P.C. BOARD	1								Includes RECEIVER P.C. BOARD, DISPLAY P.C. BOARD, SWITCH/BUZZER P.C. BOARD, TERMINAL P.C. BOARD
15	U01 A71 452	ELECTRONIC CONTROL P.C. BOARD		1							
15	U01 A72 452	ELECTRONIC CONTROL P.C. BOARD			1						
15	U01 A73 452	ELECTRONIC CONTROL P.C. BOARD				1					
15	U01 A74 452	ELECTRONIC CONTROL P.C. BOARD					1				
15	U01 A75 452	ELECTRONIC CONTROL P.C. BOARD						1			
15	U01 A76 452	ELECTRONIC CONTROL P.C. BOARD							1		
16	U01 A01 385	VARISTOR	1	1	1	1	1	1	1	NR11	
17	U01 001 239	FUSE	1	1	1	1	1	1	1	F11	T3.15AL250V
18	U01 A09 307	INDOOR COIL THERMISTOR	1	1	1	1	1	1	1	RT12, RT13	
19	U01 A06 978	CONDUIT PLATE	1	1	1	1	1	1	1		
20	U01 A04 979	CONDUIT COVER	1	1	1	1	1	1	1		
21	U01 A04 333	MOTOR BAND	1	1	1	1	1	1	1		
22	U01 A02 690	WATER COVER	1	1	1	1	1	1	1		
23	U01 A06 300	INDOOR FAN MOTOR	1	1	1	1	1	1	1	MF	RC0J30-□□, Includes FAN MOTOR RUBBER MOUNT (2 PCS/SET)
24	U01 A05 302	LINE FLOW FAN	1	1	1	1	1	1	1		
25	U01 002 937	WI-FI INTERFACE ASSEMBLY	1	1	1	1	1	1	1		
26	U01 A10 392	DISPLAY LEAD ASSEMBLY	1	1	1	1	1	1	1		

MSZ-GX18NL-U1 MSZ-GX24NL-U1 MSZ-GX30NL-U1 MSZ-GX36NL-U1
MSY-GX18NL-U1 MSY-GX24NL-U1 MSY-GX30NL-U1 MSY-GX36NL-U1

1-5. INDOOR UNIT STRUCTURAL PARTS

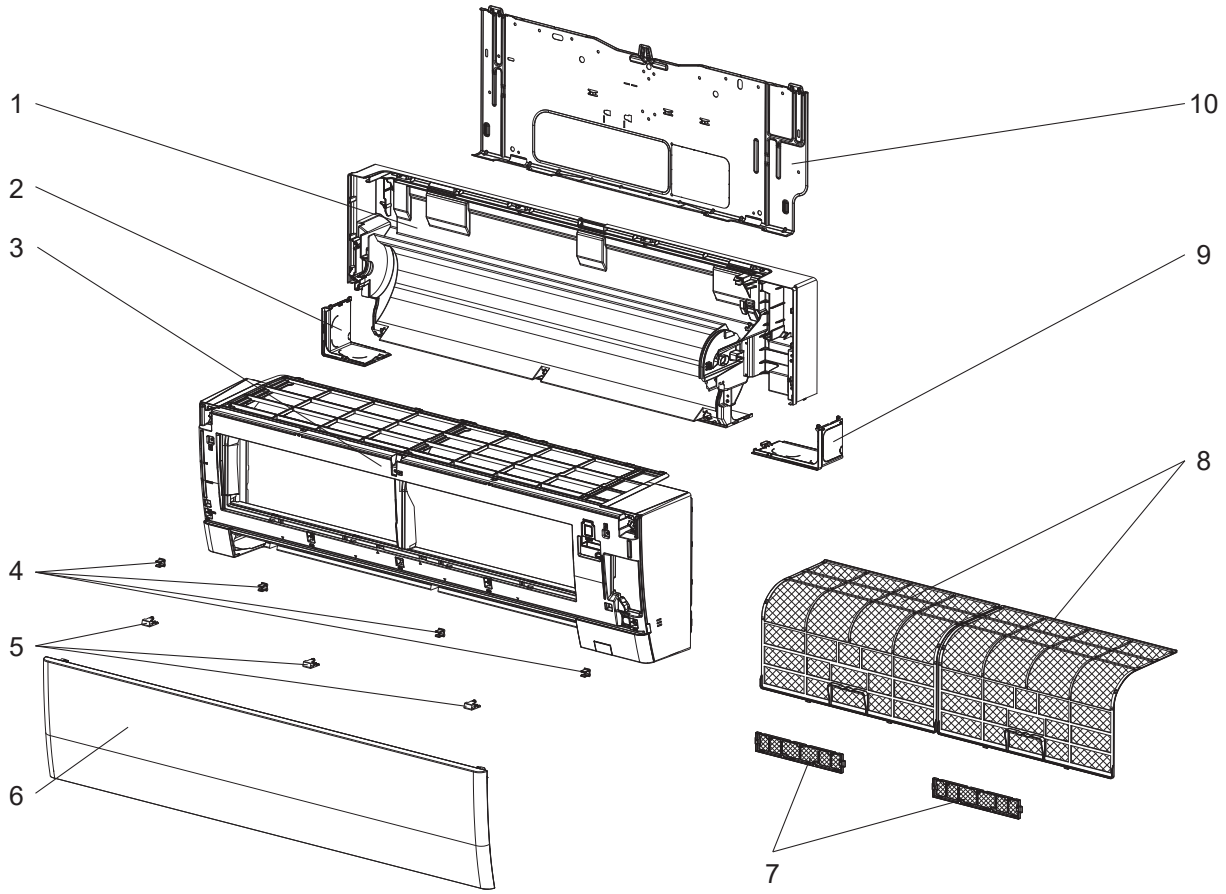

Optional parts (Refer to 2-1.)

1-6. ACCESSORY AND REMOTE CONTROLLER

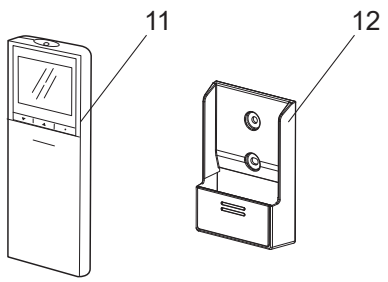

1-7. INDOOR UNIT HEAT EXCHANGER

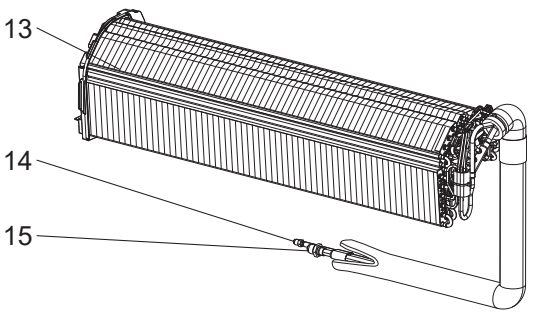

1-5. INDOOR UNIT STRUCTURAL PARTS

1. The part quantity below indicates the required number of pieces per unit.

No.	Part No.	Part Name	MSZ-GX18NL-U1	MSZ-GX24NL-U1	MSZ-GX30NL-U1	MSZ-GX36NL-U1	MSY-GX18NL-U1	MSY-GX24NL-U1	MSY-GX30NL-U1	MSY-GX36NL-U1	Symbol in Wiring Diagram	Remarks
1	E22 89F 234	BOX ASSEMBLY	1	1	1	1	1	1	1	1		
2	E22 89F 976	CORNER BOX (LEFT)	1	1	1	1	1	1	1	1		
3	E22 7H3 000	PANEL ASSEMBLY	1	1	1	1	1	1	1	1		Includes No. 4 and 6
4	E22 408 142	CATCH	4	4	4	4	4	4	4	4		4 PCS/SET
5	E22 89F 067	SCREW CAP	3	3	3	3	3	3	3	3		3 PCS/SET
6	E22 7H3 010	FRONT PANEL	1	1	1	1	1	1	1	1		
7	—	AIR CLEANING FILTER (ELECTROSTATIC ANTI-ALLERGY ENZYME FILTER)	2	2	2	2	2	2	2	2		2 PCS/SET MAC-2320FT
8	E22 7H3 100	AIR FILTER	2	2	2	2	2	2	2	2		1 PC/SET
9	E22 89F 975	CORNER BOX (RIGHT)	1	1	1	1	1	1	1	1		
10	E22 2F0 970	INSTALLATION PLATE	1	1	1	1	1	1	1	1		

1-6. ACCESSORY AND REMOTE CONTROLLER

1. The part quantity below indicates the required number of pieces per unit.

No.	Part No.	Part Name	MSZ-GX18NL-U1	MSZ-GX24NL-U1	MSZ-GX30NL-U1	MSZ-GX36NL-U1	MSY-GX18NL-U1	MSY-GX24NL-U1	MSY-GX30NL-U1	MSY-GX36NL-U1	Symbol in Wiring Diagram	Remarks
11	E22 7H3 426	REMOTE CONTROLLER INFRARED	1	1	1	1						SH24K
11	E22 7H7 426	REMOTE CONTROLLER INFRARED					1	1	1	1		SH24L
12	E22 41G 083	REMOTE CONTROLLER HOLDER	1	1	1	1	1	1	1	1		

1-7. INDOOR UNIT HEAT EXCHANGER

1. The part quantity below indicates the required number of pieces per unit.

No.	Part No.	Part Name	MSZ-GX18NL-U1	MSZ-GX24NL-U1	MSZ-GX30NL-U1	MSZ-GX36NL-U1	MSY-GX18NL-U1	MSY-GX24NL-U1	MSY-GX30NL-U1	MSY-GX36NL-U1	Symbol in Wiring Diagram	Remarks
13	E22 7H3 620	INDOOR HEAT EXCHANGER	1				1					
13	E22 7H4 620	INDOOR HEAT EXCHANGER		1	1	1		1	1	1		
14	E22 151 667	UNION (LIQUID)	1	1	1	1	1	1	1	1		ø1/4 (ø6.35)
15	E22 179 667	UNION (GAS)	1				1					ø1/2 (ø12.7)
15	E22 138 666	UNION (GAS)		1	1	1		1	1	1		ø5/8 (ø15.88)

MSZ-GX18NL-U1 MSZ-GX24NL-U1 MSZ-GX30NL-U1 MSZ-GX36NL-U1
MSY-GX18NL-U1 MSY-GX24NL-U1 MSY-GX30NL-U1 MSY-GX36NL-U1

1-8. INDOOR UNIT ELECTRICAL PARTS AND FUNCTIONAL PARTS

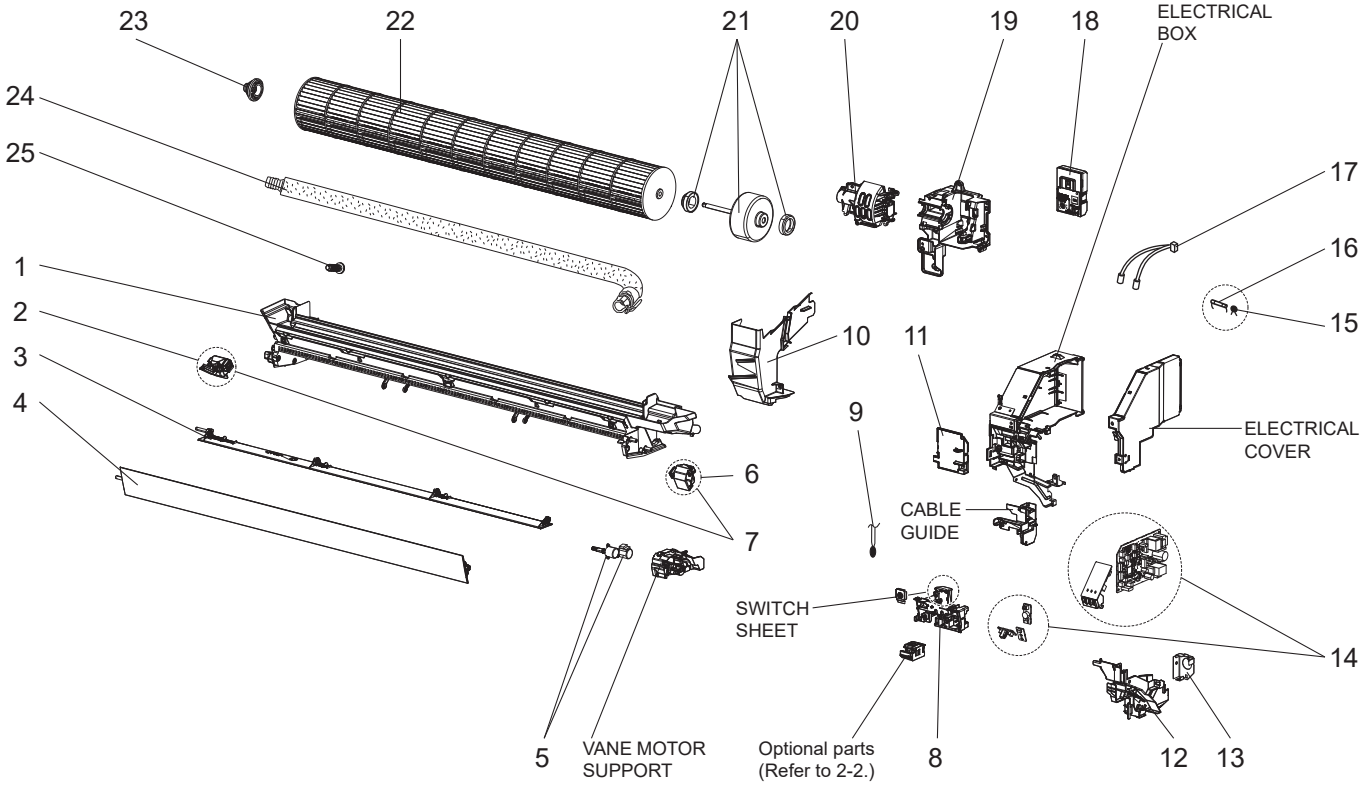

1-8. INDOOR UNIT ELECTRICAL PARTS AND FUNCTIONAL PARTS

1. The part quantity below indicates the required number of pieces per unit.

No.	Part No.	Part Name	MSZ-GX18NL-□U1	MSZ-GX24NL-□U1	MSZ-GX30NL-□U1	MSZ-GX36NL-□U1	MSY-GX18NL-□U1	MSY-GX24NL-□U1	MSY-GX30NL-□U1	MSY-GX36NL-□U1	Symbol in Wiring Diagram	Remarks
1	E22 7H3 235	NOZZLE ASSEMBLY	1	1	1	1	1	1	1	1		Full assembly except DRAIN HOSE
2	E22 82F 303	VANE MOTOR UNIT LEFT (VERTICAL)	1	1	1	1	1	1	1	1		Includes MV4
3	E22 7H3 041	HORIZONTAL VANE (LOWER)	1	1	1	1	1	1	1	1		
4	E22 7H3 040	HORIZONTAL VANE (UPPER)	1	1	1	1	1	1	1	1		
5	E22 94B 303	VANE MOTOR (HORIZONTAL)	2	2	2	2	2	2	2	2	MV1, MV2	UP & DOWN
6	E22 84F 303	VANE MOTOR UNIT RIGHT (VERTICAL)	1	1	1	1	1	1	1	1		Includes MV3
7	E22 C32 303	VANE MOTOR (VERTICAL)	2	2	2	2	2	2	2	2	MV3, MV4	RIGHT & LEFT
8	E22 7H3 095	DISPLAY AND RECEIVER P.C. BOARD HOLDER	1	1	1	1	1	1	1	1		
9	E22 45N 308	ROOM TEMPERATURE THERMISTOR	1	1	1	1	1	1	1	1	RT11	
10	E22 7H3 541	WATER CUT	1	1	1	1	1	1	1	1		
11	E22 F76 784	V.A. CLAMP	1	1	1	1	1	1	1	1		
12	E22 7H3 979	CONDUIT COVER	1	1	1	1	1	1	1	1		
13	E22 F76 978	CONDUIT PLATE	1	1	1	1	1	1	1	1		
14	E22 7H3 452	ELECTRONIC CONTROL P.C. BOARD	1									Includes TERMINAL P.C. BOARD with TB attached, SWITCH P.C. BOARD, DISPLAY P.C. BOARD and RECEIVER P.C. BOARD
14	E22 7H4 452	ELECTRONIC CONTROL P.C. BOARD		1								
14	E22 7H5 452	ELECTRONIC CONTROL P.C. BOARD			1							
14	E22 7H6 452	ELECTRONIC CONTROL P.C. BOARD				1						
14	E22 7H7 452	ELECTRONIC CONTROL P.C. BOARD					1					
14	E22 7H8 452	ELECTRONIC CONTROL P.C. BOARD						1				
14	E22 7H9 452	ELECTRONIC CONTROL P.C. BOARD							1			
14	E22 AZ5 452	ELECTRONIC CONTROL P.C. BOARD								1		
15	E22 K90 385	VARISTOR	1	1	1	1	1	1	1	1	NR11	
16	E22 C67 382	FUSE	1	1	1	1	1	1	1	1	F11	T3.15AL250V
17	E22 7H3 307	INDOOR COIL THERMISTOR	1	1	1	1	1	1	1	1	RT12, RT13	
18	E22 7H3 457	WIRELESS LAN MODULE	1	1	1	1	1	1	1	1		
19	E22 5G4 333	MOTOR BED	1	1	1	1	1	1	1	1		
20	E22 7H3 333	MOTOR BAND	1	1	1	1	1	1	1	1		
21	E22 7H3 300	INDOOR FAN MOTOR	1	1	1	1	1	1	1	1	MF	RC0J56-□□ Includes FAN MOTOR RUBBER MOUNT (2 PCS/SET)
22	E22 19A 302	LINE FLOW FAN	1	1	1	1	1	1	1	1		
23	E22 A89 509	BEARING MOUNT ASSEMBLY	1	1	1	1	1	1	1	1		
24	E22 T20 702	DRAIN HOSE	1	1	1	1	1	1	1	1		
25	E27 42R 705	DRAIN CAP	1	1	1	1	1	1	1	1		

MSZ-GX06NL-U2 MSZ-GX09NL-U2 MSZ-GX12NL-U2 MSZ-GX15NL-U2
MSY-GX09NL-U2 MSY-GX12NL-U2 MSY-GX15NL-U2

1-9. INDOOR UNIT STRUCTURAL PARTS

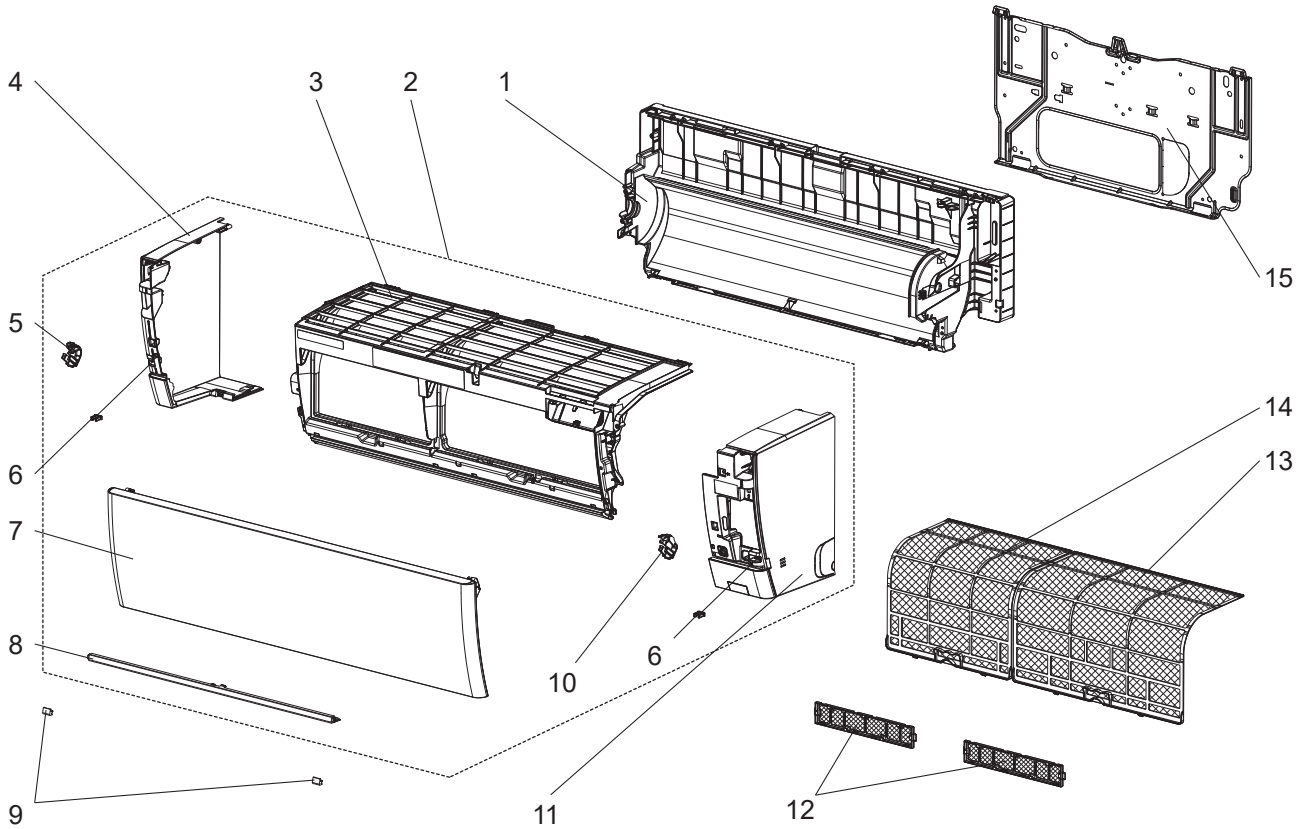

Optional parts (Refer to 2-1.)

1-10. ACCESSORY AND REMOTE CONTROLLER

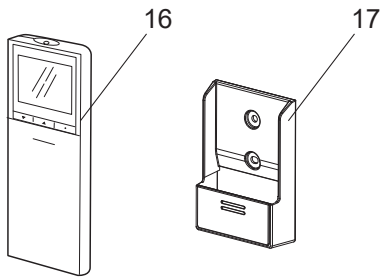

1-11. INDOOR UNIT HEAT EXCHANGER

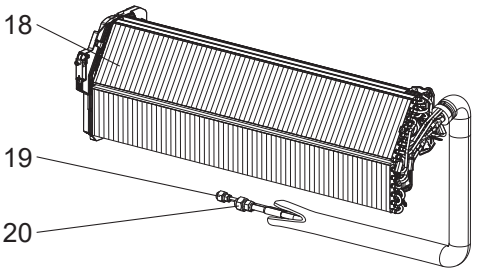

1-9. INDOOR UNIT STRUCTURAL PARTS

1. The part quantity below indicates the required number of pieces per unit.

No.	Part No.	Part Name	MSZ-GX06NL-U2	MSZ-GX09NL-U2	MSZ-GX12NL-U2	MSZ-GX15NL-U2	MSY-GX09NL-U2	MSY-GX12NL-U2	MSY-GX15NL-U2	Symbol in Wiring Diagram	Remarks
1	U01 A06 234	BOX ASSEMBLY	1	1	1	1	1	1	1		Not including SPEC NAME PLATE
2	U01 A15 000	PANEL ASSEMBLY	1	1	1	1	1	1	1		
3	U01 A06 010	PANEL (FRONT) ASSEMBLY	1	1	1	1	1	1	1		
4	U01 A20 000	PANEL (LEFT) ASSEMBLY	1	1	1	1	1	1	1		Includes No. 5, 6
5	U01 002 080	ARM HOLDER (LEFT)	1	1	1	1	1	1	1		
6	U01 A02 142	CATCH	2	2	2	2	2	2	2		2 pcs/set
7	U01 A07 010	FRONT PANEL	1	1	1	1	1	1	1		
8	U01 A21 000	PANEL (UNDER) ASSEMBLY	1	1	1	1	1	1	1		
9	U01 003 087	SCREW CAP	2	2	2	2	2	2	2		2 pcs/set
10	U01 001 080	ARM HOLDER (RIGHT)	1	1	1	1	1	1	1		
11	U01 A18 000	PANEL (RIGHT) ASSEMBLY	1	1	1	1	1	1	1		Includes No. 6, 10
12	—	AIR CLEANING FILTER (ELECTROSTATIC ANTI-ALLERGY ENZYME FILTER)	2	2	2	2	2	2	2		2 PCS/SET MAC-2320FT
13	U01 001 500	AIR FILTER_RIGHT	1	1	1	1	1	1	1		1 PC/SET
14	U01 002 500	AIR FILTER_LEFT	1	1	1	1	1	1	1		1 PC/SET
15	U01 A04 970	INSTALLATION PLATE	1	1	1	1	1	1	1		

1-10. ACCESSORY AND REMOTE CONTROLLER

1. The part quantity below indicates the required number of pieces per unit.

No.	Part No.	Part Name	MSZ-GX06NL-U2	MSZ-GX09NL-U2	MSZ-GX12NL-U2	MSZ-GX15NL-U2	MSY-GX09NL-U2	MSY-GX12NL-U2	MSY-GX15NL-U2	Symbol in Wiring Diagram	Remarks
16	U01 A26 426	REMOTE CONTROLLER	1	1	1	1					SH24H
16	U01 A27 426	REMOTE CONTROLLER					1	1	1		SH24J
17	U01 A20 426	REMOTE CONTROLLER HOLDER	1	1	1	1	1	1	1		

1-11. INDOOR UNIT HEAT EXCHANGER

1. The part quantity below indicates the required number of pieces per unit.

No.	Part No.	Part Name	MSZ-GX06NL-U2	MSZ-GX09NL-U2	MSZ-GX12NL-U2	MSZ-GX15NL-U2	MSY-GX09NL-U2	MSY-GX12NL-U2	MSY-GX15NL-U2	Symbol in Wiring Diagram	Remarks
18	U01 A10 620	INDOOR HEAT EXCHANGER	1	1	1		1	1			Includes No. 19, 20
18	U01 A11 620	INDOOR HEAT EXCHANGER				1			1		Includes No. 19, 20
19	U01 A01 667	UNION (LIQUID)	1	1	1	1	1	1	1		ø1/4 (ø6.35)
20	U01 A01 666	UNION (GAS)	1	1	1		1	1			ø3/8 (ø9.52)
20	U01 A02 666	UNION (GAS)				1			1		ø1/2 (ø12.7)

MSZ-GX06NL-U2 MSZ-GX09NL-U2 MSZ-GX12NL-U2 MSZ-GX15NL-U2
MSY-GX09NL-U2 MSY-GX12NL-U2 MSY-GX15NL-U2

1-12. INDOOR UNIT ELECTRICAL PARTS AND FUNCTIONAL PARTS

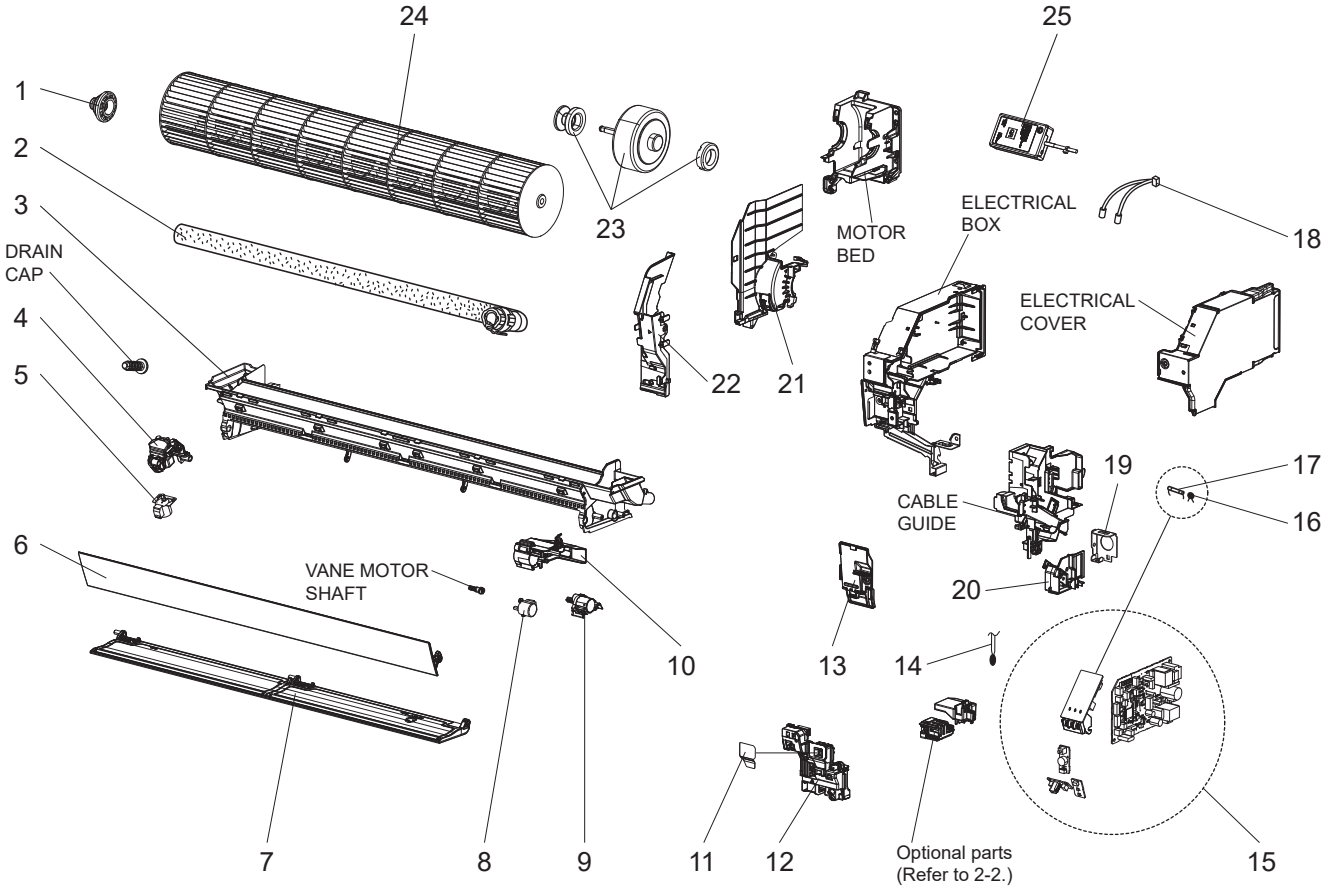

1-12. INDOOR UNIT ELECTRICAL PARTS AND FUNCTIONAL PARTS

1. The part quantity below indicates the required number of pieces per unit.

No.	Part No.	Part Name	MSZ-GX06NL-□U2	MSZ-GX09NL-□U2	MSZ-GX12NL-□U2	MSZ-GX15NL-□U2	MSY-GX09NL-□U2	MSY-GX12NL-□U2	MSY-GX15NL-□U2	Symbol in Wiring Diagram	Remarks
1	U01 A02 510	BEARING MOUNT ASSEMBLY	1	1	1	1	1	1	1		Includes sleeve bearing
2	U01 A01 702	DRAIN HOSE	1	1	1	1	1	1	1		
3	U01 A03 235	NOZZLE ASSEMBLY	1	1	1	1	1	1	1		Full assembly except DRAIN HOSE
4	U01 A02 044	VERTICAL VANE MOTOR UNIT	1	1	1	1	1	1	1		Includes MV3
5	U01 A03 044	VANE MOTOR (VERTICAL)	1	1	1	1	1	1	1	MV3	RIGHT & LEFT
6	U01 A02 040	HORIZONTAL VANE (UPPER) ASSEMBLY	1	1	1	1	1	1	1		Includes shaft
7	U01 A02 041	HORIZONTAL VANE (LOWER) ASSEMBLY	1	1	1	1	1	1	1		Includes shaft
8	U01 A01 303	VANE MOTOR (HORIZONTAL) (UPPER)	1	1	1	1	1	1	1	MV1	UP & DOWN
9	U01 A03 046	VANE MOTOR (HORIZONTAL) (LOWER)	1	1	1	1	1	1	1	MV2	UP & DOWN
10	U01 A02 046	HORIZONTAL VANE MOTOR UNIT	1	1	1	1	1	1	1		Includes MV1 & MV2
11	U01 009 987	SWITCH SHEET	1	1	1	1	1	1	1		
12	U01 A02 085	DISPLAY AND RECEIVER P.C. BOARD HOLDER ASSEMBLY	1	1	1	1	1	1	1		
13	U01 A03 784	V.A. CLAMP ASSEMBLY	1	1	1	1	1	1	1		
14	U01 A11 308	ROOM TEMPERATURE THERMISTOR	1	1	1	1	1	1	1	RT11	
15	U01 A98 452	ELECTRONIC CONTROL P.C. BOARD	1								Includes RECEIVER P.C. BOARD, DISPLAY P.C. BOARD, SWITCH/BUZZER P.C. BOARD, TERMINAL P.C. BOARD
15	U01 A99 452	ELECTRONIC CONTROL P.C. BOARD		1							
15	U01 B01 452	ELECTRONIC CONTROL P.C. BOARD			1						
15	U01 B02 452	ELECTRONIC CONTROL P.C. BOARD				1					
15	U01 B03 452	ELECTRONIC CONTROL P.C. BOARD					1				
15	U01 B04 452	ELECTRONIC CONTROL P.C. BOARD						1			
15	U01 B05 452	ELECTRONIC CONTROL P.C. BOARD							1		
16	U01 A01 385	VARISTOR	1	1	1	1	1	1	1	NR11	
17	U01 A03 381	FUSE	1	1	1	1	1	1	1	F11	T3.15AL250V
18	U01 A09 307	INDOOR COIL THERMISTOR	1	1	1	1	1	1	1	RT12, RT13	
19	U01 A06 978	CONDUIT PLATE	1	1	1	1	1	1	1		
20	U01 A04 979	CONDUIT COVER	1	1	1	1	1	1	1		
21	U01 A04 333	MOTOR BAND	1	1	1	1	1	1	1		
22	U01 A02 690	WATER COVER	1	1	1	1	1	1	1		
23	U01 A06 300	INDOOR FAN MOTOR	1	1	1	1	1	1	1	MF	RC0J30-□□, Includes FAN MOTOR RUBBER MOUNT (2 PCS/SET)
24	U01 A05 302	LINE FLOW FAN	1	1	1	1	1	1	1		
25	U01 004 937	WI-FI INTERFACE ASSEMBLY	1	1	1	1	1	1	1		

MSZ-GX06NL-U2 MSZ-GX09NL-U2 MSZ-GX12NL-U2 MSZ-GX15NL-U2

1-13. LEAD WIRE ASSEMBLY

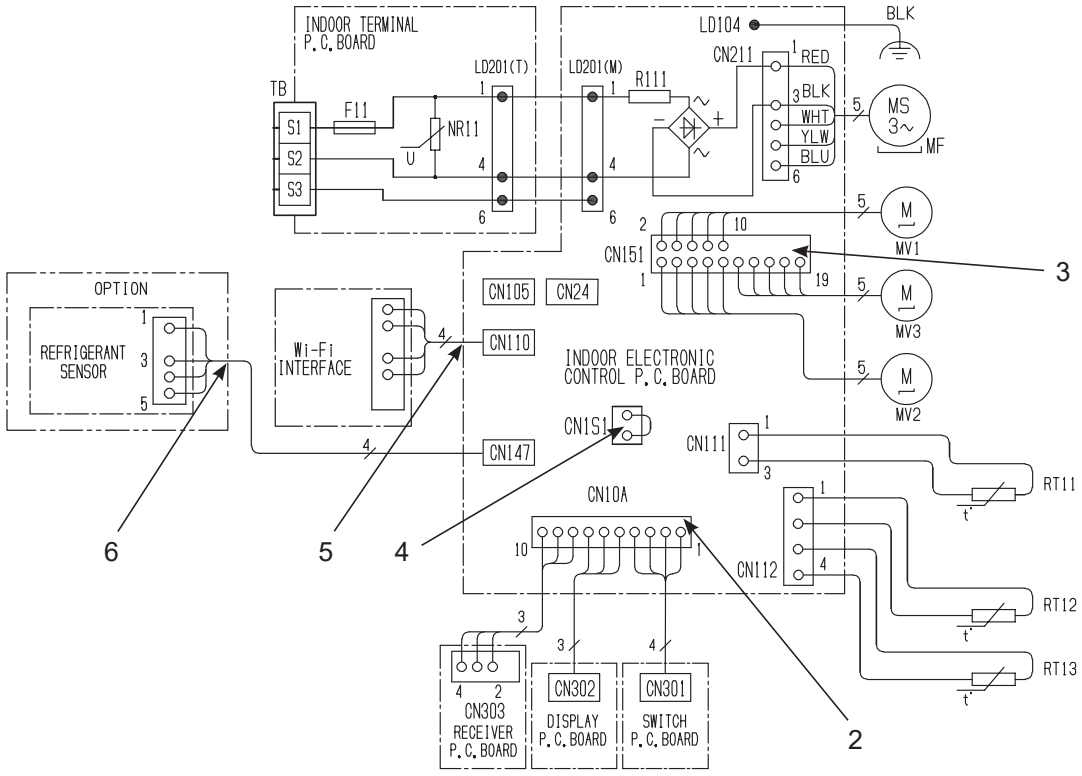

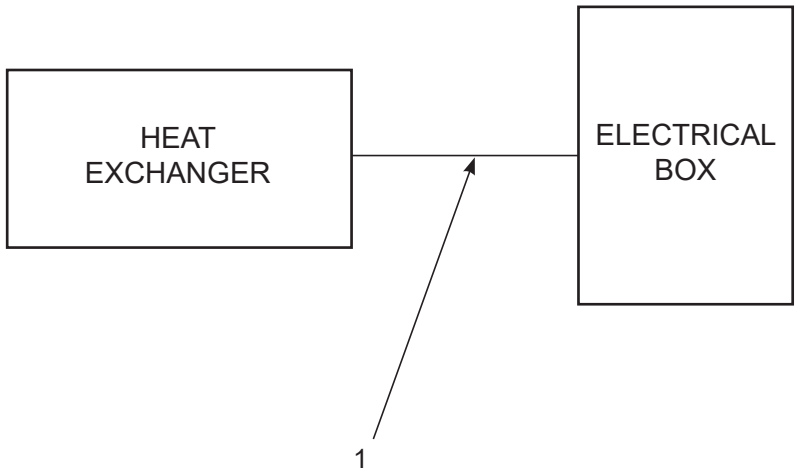

1-13. LEAD WIRE ASSEMBLY

1. The part quantity below indicates the required number of pieces per unit.

No.	Part No.	Part name	MSZ-GX06NL-U2	MSZ-GX09NL-U2	MSZ-GX12NL-U2	MSZ-GX15NL-U2	Symbol in Wiring Diagram	Remarks
1	U01 A24 392	LEAD ASSY	1	1	1	1		Ground for HEAT EXCHANGER
2	U01 A24 392	LEAD ASSY	1	1	1	1		CN10A (Control P.C.B) – SWITCH/ DISPLAY/RECEIVER P.C. BOARD
3	U01 A24 392	LEAD ASSY	1	1	1	1		CN151 (Control P.C.B) – MV1/MV2/ MV3
4	U01 A24 392	LEAD ASSY	1	1	1	1		CN1S1 (Control P.C.B)
5	U01 A24 392	LEAD ASSY	1	1	1	1		CN110 (Control P.C.B) – WI-FI INTERFACE
6	U01 A24 392	LEAD ASSY	1	1	1	1		CN147 (Control P.C.B) – REFRIGERANT SENSOR

MSY-GX09NL-U2 MSY-GX12NL-U2 MSY-GX15NL-U2

1-14. LEAD WIRE ASSEMBLY

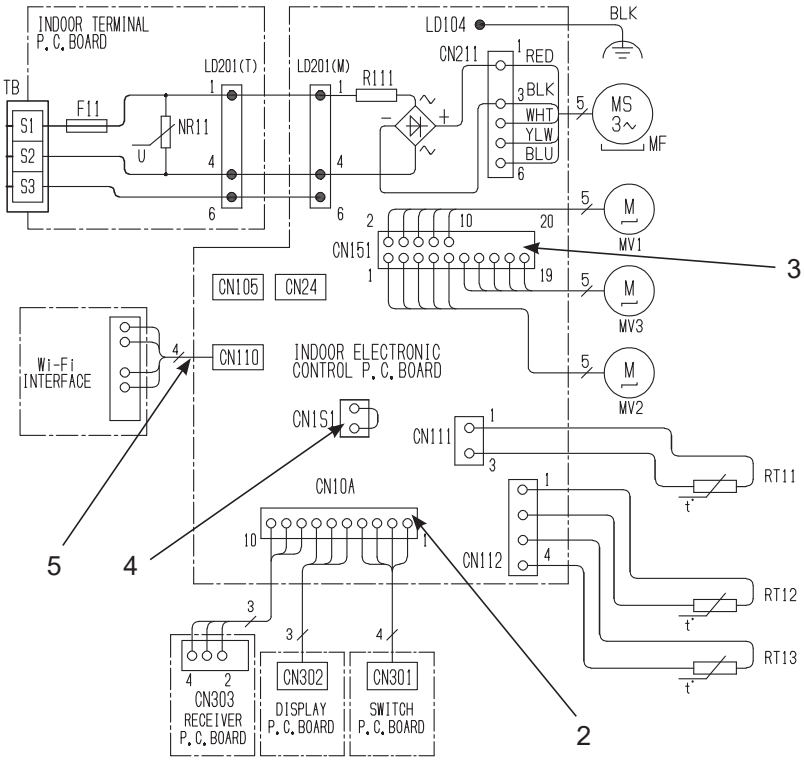

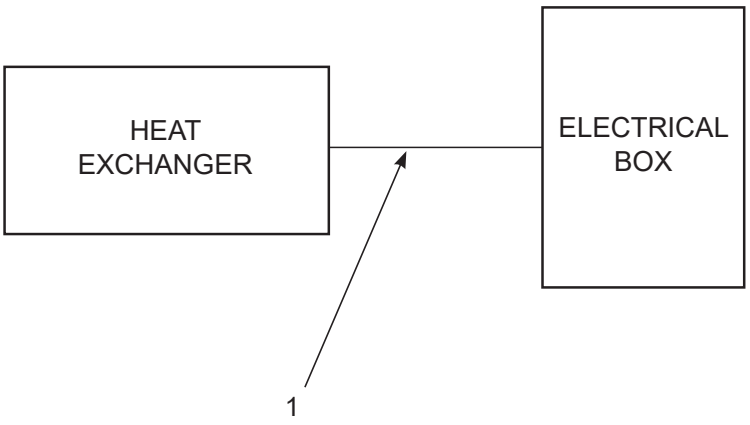

1-14. LEAD WIRE ASSEMBLY

1. The part quantity below indicates the required number of pieces per unit.

No.	Part No.	Part name	MSY-GX09NL-U2	MSY-GX12NL-U2	MSY-GX15NL-U2	Symbol in Wiring Diagram	Remarks
1	U01 A24 392	LEAD ASSY	1	1	1		Ground for HEAT EXCHANGER
2	U01 A24 392	LEAD ASSY	1	1	1		CN10A (Control P.C.B) – SWITCH/ DISPLAY/RECEIVER P.C. BOARD
3	U01 A24 392	LEAD ASSY	1	1	1		CN151 (Control P.C.B) – MV1/MV2/MV3
4	U01 A24 392	LEAD ASSY	1	1	1		CN1S1 (Control P.C.B)
5	U01 A24 392	LEAD ASSY	1	1	1		CN110 (Control P.C.B) – WI-FI INTERFACE

MSZ-GX18NL-U2 MSZ-GX24NL-U2 MSZ-GX30NL-U2 MSZ-GX36NL-U2
MSY-GX18NL-U2 MSY-GX24NL-U2 MSY-GX30NL-U2 MSY-GX36NL-U2

1-15. INDOOR UNIT STRUCTURAL PARTS

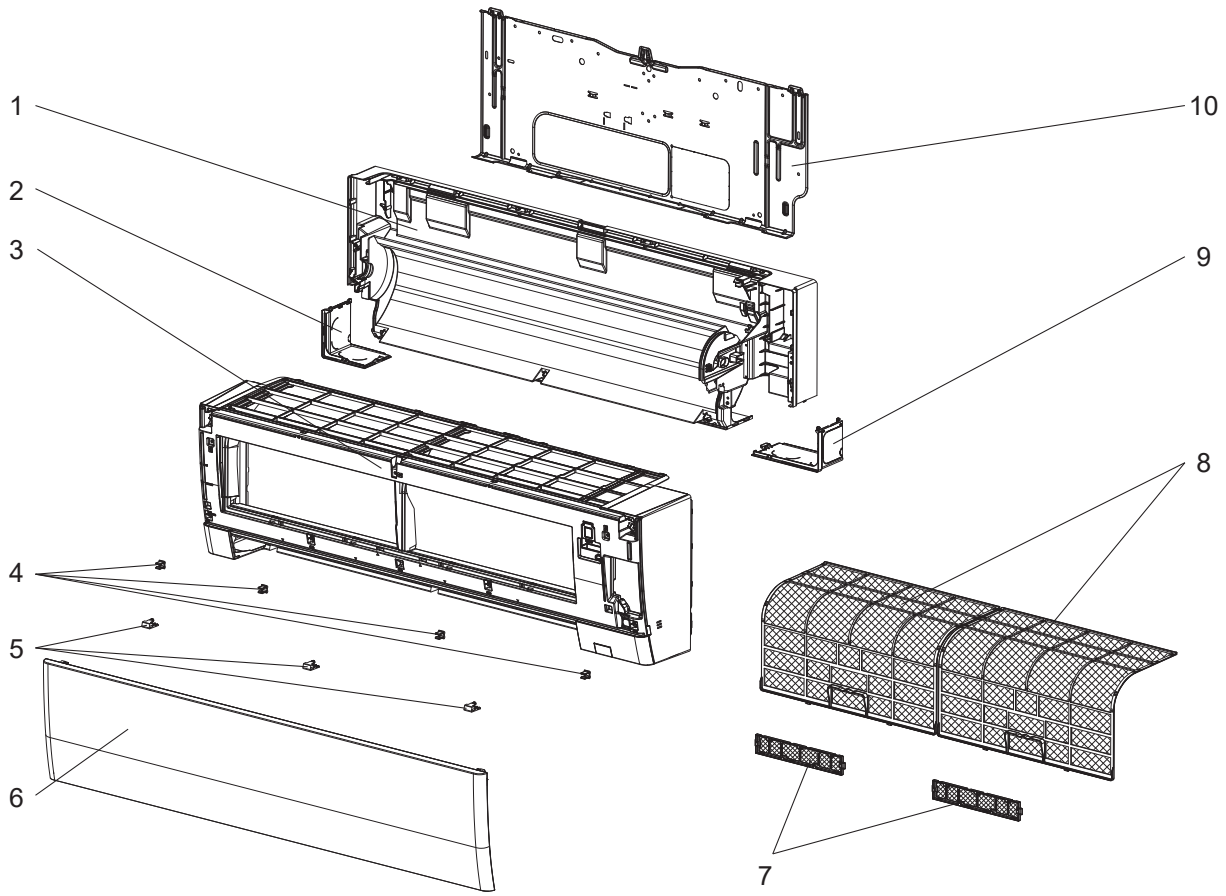

Optional parts (Refer to 2-1.)

1-16. ACCESSORY AND REMOTE CONTROLLER

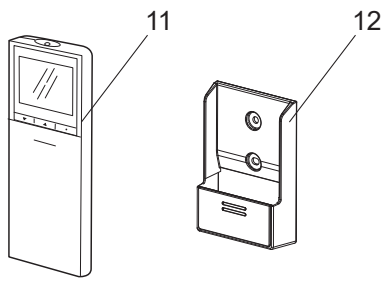

1-17. INDOOR UNIT HEAT EXCHANGER

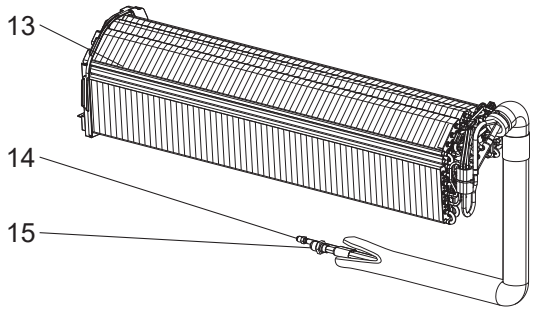

1-15. INDOOR UNIT STRUCTURAL PARTS

1. The part quantity below indicates the required number of pieces per unit.

No.	Part No.	Part Name	MSZ-GX18NL-U2	MSZ-GX24NL-U2	MSZ-GX30NL-U2	MSZ-GX36NL-U2	MSY-GX18NL-U2	MSY-GX24NL-U2	MSY-GX30NL-U2	MSY-GX36NL-U2	Symbol in Wiring Diagram	Remarks
1	E22 89F 234	BOX ASSEMBLY	1	1	1	1	1	1	1	1		
2	E22 89F 976	CORNER BOX (LEFT)	1	1	1	1	1	1	1	1		
3	E22 7H3 000	PANEL ASSEMBLY	1	1	1	1	1	1	1	1		Includes No. 4 and 6
4	E22 408 142	CATCH	4	4	4	4	4	4	4	4		4 PCS/SET
5	E22 89F 067	SCREW CAP	3	3	3	3	3	3	3	3		3 PCS/SET
6	E22 7H3 010	FRONT PANEL	1	1	1	1	1	1	1	1		
7	—	AIR CLEANING FILTER (ELECTROSTATIC ANTI-ALLERGY ENZYME FILTER)	2	2	2	2	2	2	2	2		2 PCS/SET MAC-2320FT
8	E22 7H3 100	AIR FILTER	2	2	2	2	2	2	2	2		1 PC/SET
9	E22 89F 975	CORNER BOX (RIGHT)	1	1	1	1	1	1	1	1		
10	E22 2F0 970	INSTALLATION PLATE	1	1	1	1	1	1	1	1		

1-16. ACCESSORY AND REMOTE CONTROLLER

1. The part quantity below indicates the required number of pieces per unit.

No.	Part No.	Part Name	MSZ-GX18NL-U2	MSZ-GX24NL-U2	MSZ-GX30NL-U2	MSZ-GX36NL-U2	MSY-GX18NL-U2	MSY-GX24NL-U2	MSY-GX30NL-U2	MSY-GX36NL-U2	Symbol in Wiring Diagram	Remarks
11	E22 7H3 426	REMOTE CONTROLLER INFRARED	1	1	1	1						SH24K
11	E22 7H7 426	REMOTE CONTROLLER INFRARED					1	1	1	1		SH24L
12	E22 41G 083	REMOTE CONTROLLER HOLDER	1	1	1	1	1	1	1	1		

1-17. INDOOR UNIT HEAT EXCHANGER

1. The part quantity below indicates the required number of pieces per unit.

No.	Part No.	Part Name	MSZ-GX18NL-U2	MSZ-GX24NL-U2	MSZ-GX30NL-U2	MSZ-GX36NL-U2	MSY-GX18NL-U2	MSY-GX24NL-U2	MSY-GX30NL-U2	MSY-GX36NL-U2	Symbol in Wiring Diagram	Remarks
13	E22 7H3 620	INDOOR HEAT EXCHANGER	1				1					
13	E22 7H4 620	INDOOR HEAT EXCHANGER		1	1	1		1	1	1		
14	E22 151 667	UNION (LIQUID)	1	1	1	1	1	1	1	1		ø1/4 (ø6.35)
15	E22 179 667	UNION (GAS)	1				1					ø1/2 (ø12.7)
15	E22 138 666	UNION (GAS)		1	1	1		1	1	1		ø5/8 (ø15.88)

MSZ-GX18NL-U2 MSZ-GX24NL-U2 MSZ-GX30NL-U2 MSZ-GX36NL-U2
MSY-GX18NL-U2 MSY-GX24NL-U2 MSY-GX30NL-U2 MSY-GX36NL-U2

1-18. INDOOR UNIT ELECTRICAL PARTS AND FUNCTIONAL PARTS

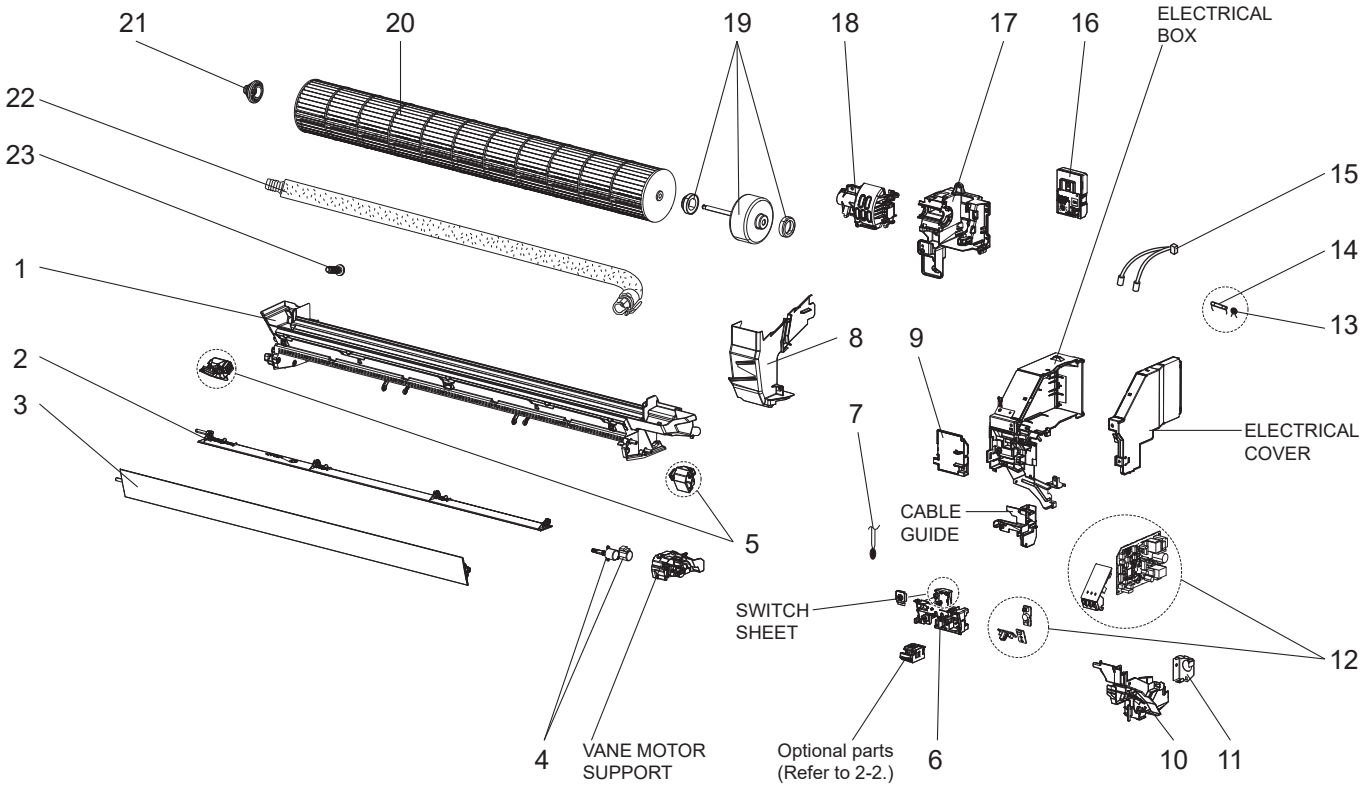

1-18. INDOOR UNIT ELECTRICAL PARTS AND FUNCTIONAL PARTS

1. The part quantity below indicates the required number of pieces per unit.

No.	Part No.	Part Name	MSZ-GX18NL-U2	MSZ-GX24NL-U2	MSZ-GX30NL-U2	MSZ-GX36NL-U2	MSY-GX18NL-U2	MSY-GX24NL-U2	MSY-GX30NL-U2	MSY-GX36NL-U2	Symbol in Wiring Diagram	Remarks
1	E22 7H3 235	NOZZLE ASSEMBLY	1	1	1	1	1	1	1	1		Full assembly except DRAIN HOSE
2	E22 7H3 041	HORIZONTAL VANE (LOWER)	1	1	1	1	1	1	1	1		
3	E22 7H3 040	HORIZONTAL VANE (UPPER)	1	1	1	1	1	1	1	1		
4	E22 94B 303	VANE MOTOR (HORIZONTAL)	2	2	2	2	2	2	2	2	MV1, MV2	UP & DOWN
5	E22 C32 303	VANE MOTOR (VERTICAL)	2	2	2	2	2	2	2	2	MV3, MV4	RIGHT & LEFT
6	E22 7H3 095	DISPLAY AND RECEIVER P.C. BOARD HOLDER	1	1	1	1	1	1	1	1		
7	E22 45N 308	ROOM TEMPERATURE THERMISTOR	1	1	1	1	1	1	1	1	RT11	
8	E22 7H3 541	WATER CUT	1	1	1	1	1	1	1	1		
9	E22 F76 784	V.A. CLAMP	1	1	1	1	1	1	1	1		
10	E22 7H3 979	CONDUIT COVER	1	1	1	1	1	1	1	1		
11	E22 F76 978	CONDUIT PLATE	1	1	1	1	1	1	1	1		
12	E22 AV3 452	ELECTRONIC CONTROL P.C. BOARD	1									Includes TERMINAL P.C. BOARD with TB attached, SWITCH P.C. BOARD, DISPLAY P.C. BOARD and RECEIVER P.C. BOARD
12	E22 AV4 452	ELECTRONIC CONTROL P.C. BOARD		1								
12	E22 AV5 452	ELECTRONIC CONTROL P.C. BOARD			1							
12	E22 AV6 452	ELECTRONIC CONTROL P.C. BOARD				1						
12	E22 AU2 452	ELECTRONIC CONTROL P.C. BOARD					1					
12	E22 AU3 452	ELECTRONIC CONTROL P.C. BOARD						1				
12	E22 AU4 452	ELECTRONIC CONTROL P.C. BOARD							1			
12	E22 AU5 452	ELECTRONIC CONTROL P.C. BOARD								1		
13	E22 K90 385	VARISTOR	1	1	1	1	1	1	1	1	NR11	
14	E22 C67 382	FUSE	1	1	1	1	1	1	1	1	F11	T3.15AL250V
15	E22 7H3 307	INDOOR COIL THERMISTOR	1	1	1	1	1	1	1	1	RT12, RT13	
16	E22 AV3 457	WIRELESS LAN MODULE	1	1	1	1	1	1	1	1		
17	E22 19A 333	MOTOR BED	1	1	1	1	1	1	1	1		
18	E22 7H3 333	MOTOR BAND	1	1	1	1	1	1	1	1		
19	E22 7H3 300	INDOOR FAN MOTOR	1	1	1	1	1	1	1	1	MF	RC0J56-□□ Includes FAN MOTOR RUBBER MOUNT (2 PCS/SET)
20	E22 19A 302	LINE FLOW FAN	1	1	1	1	1	1	1	1		
21	E22 A89 509	BEARING MOUNT ASSEMBLY	1	1	1	1	1	1	1	1		Includes sleeve bearing
22	E22 T20 702	DRAIN HOSE	1	1	1	1	1	1	1	1		
23	E27 42R 705	DRAIN CAP	1	1	1	1	1	1	1	1		

MSZ-GX18NL-U2 MSZ-GX24NL-U2
1-19. LEAD WIRE ASSEMBLY

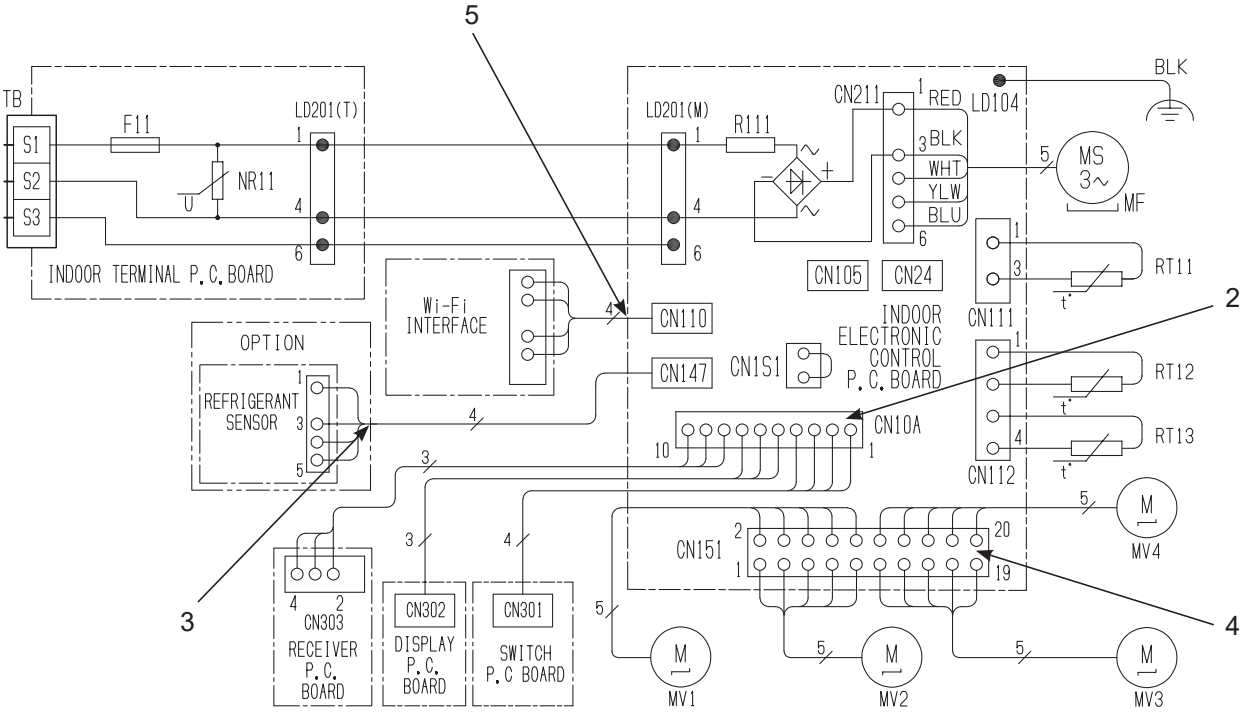

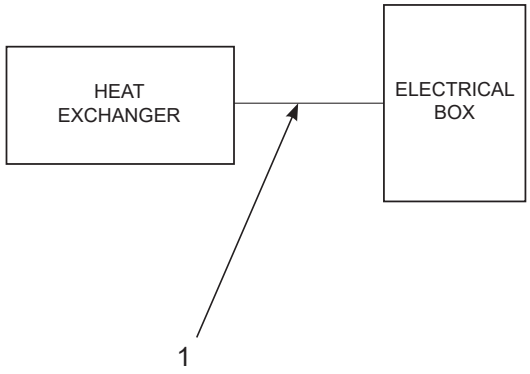

1-19. LEAD WIRE ASSEMBLY

1. The part quantity below indicates the required number of pieces per unit.

No.	Part No.	Part name	MSZ-GX18NL - U2	MSZ-GX24NL - U2	Symbol in Wiring Diagram	Remarks
1	E22 AV3 316	LEAD ASSY	1	1		Ground for HEAT EXCHANGER
2	E22 AV4 316	LEAD ASSY	1	1		CN10A (Control P.C.B) - SWITCH/DISPLAY/ RECEIVER P.C. BOARD
3	E22 AR1 316	LEAD ASSY	1	1		CN147 (Control P.C.B) - REFRIGERANT SENSOR
4	E22 AV5 316	LEAD ASSY	1	1		CN151 (Control P.C.B) - MV1/MV2/MV3/MV4
5	E22 AV6 316	LEAD ASSY	1	1		CN110 (Control P.C.B) - WI-FI INTERFACE

MSZ-GX30NL-U2 MSZ-GX36NL-U2
MSY-GX18NL-U2 MSY-GX24NL-U2 MSY-GX30NL-U2 MSY-GX36NL-U2

1-20. LEAD WIRE ASSEMBLY

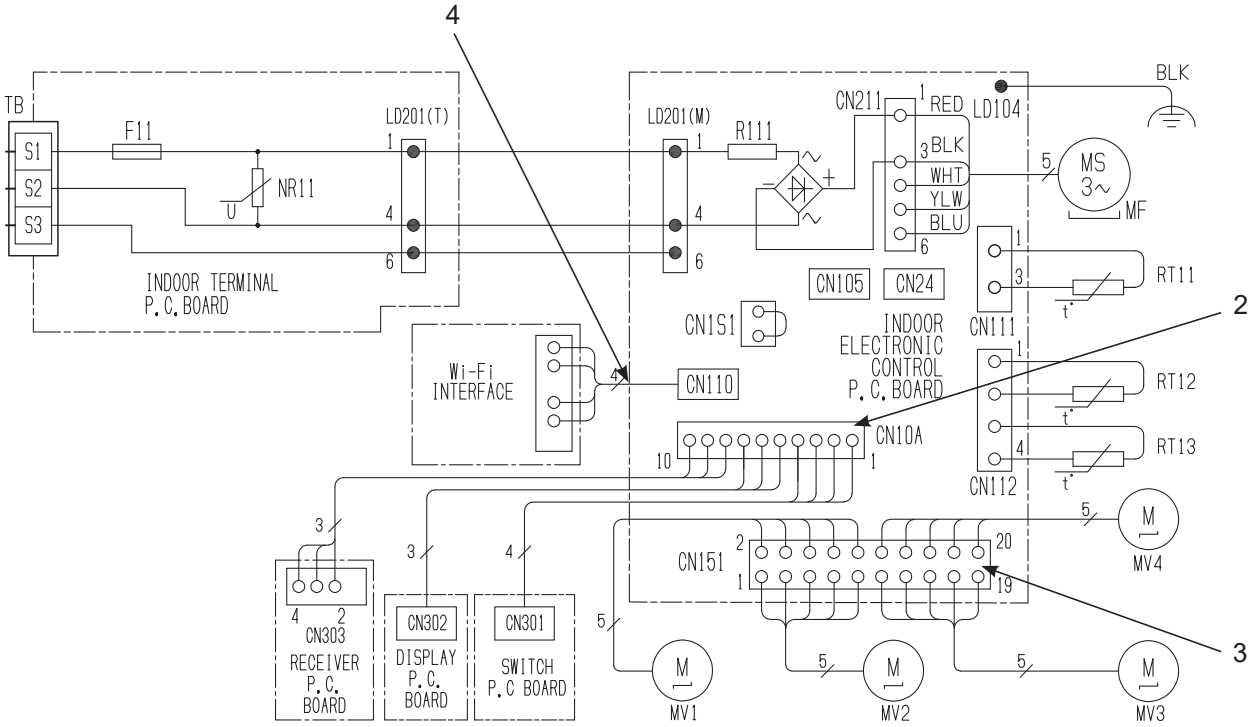

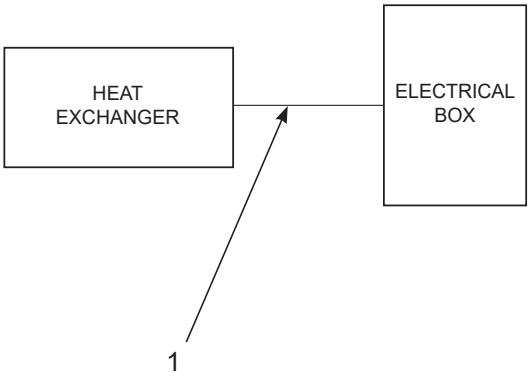

1-20. LEAD WIRE ASSEMBLY

1. The part quantity below indicates the required number of pieces per unit.

No.	Part No.	Part name	MSZ-GX30NL-U2	MSZ-GX36NL-U2	MSY-GX18NL-U2	MSY-GX24NL-U2	MSY-GX30NL-U2	MSY-GX36NL-U2	Symbol in Wiring Diagram	Remarks
1	E22 AV3 316	LEAD ASSY	1	1	1	1	1	1		Ground for HEAT EXCHANGER
2	E22 AV4 316	LEAD ASSY	1	1	1	1	1	1		CN10A (Control P.C.B) - SWITCH/ DISPLAY/RECEIVER P.C. BOARD
3	E22 AV5 316	LEAD ASSY	1	1	1	1	1	1		CN151 (Control P.C.B) - MV1/MV2/ MV3/MV4
4	E22 AV6 316	LEAD ASSY	1	1	1	1	1	1		CN110 (Control P.C.B) - WI-FI INTERFACE

1-21. AIR CLEANING FILTER (ELECTROSTATIC ANTI-ALLERGY ENZYME FILTER)

Every 3 months:

● Remove dirt by a vacuum cleaner.

When dirt cannot be removed by vacuum cleaning:

● Soak the filter and its frame in lukewarm water before rinsing it.

● After washing, dry it well in shade.

Every year:

● Replace it with a new air cleaning filter for best performance.

NOTE 1: Clean the filters regularly for best performance and to reduce power consumption.

NOTE 2: Dirty filters cause condensation in the air conditioner which will contribute to the growth of fungi such as mold. It is therefore recommended to clean air filters every 2 weeks.

Model		Part No.
MSZ-GX06NL	MSY-GX09NL	MAC-2320FT
MSZ-GX09NL	MSY-GX12NL	
MSZ-GX12NL	MSY-GX15NL	
MSZ-GX15NL	MSY-GX18NL	
MSZ-GX18NL	MSY-GX24NL	
MSZ-GX24NL	MSY-GX30NL	
MSZ-GX30NL	MSY-GX36NL	
MSZ-GX36NL		

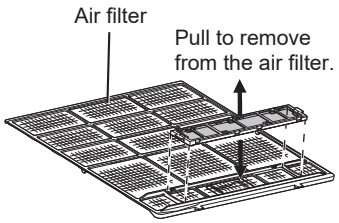

2 OPTIONAL PARTS

2-1. AIR CLEANING FILTER (MICROPARTICLE CATCHING FILTER, OPTION)

Removes the microparticles from the air by means of static electricity.

Back side of air filter

Clean every 3 months:

- Remove dirt by a vacuum cleaner.
- Put it back to its original position, and install all tabs of the air cleaning filter.
- Do not wash it with water. Replace it with a new air cleaning filter when tobacco tar or oil stains adhere to it.

Every 3 year:

- Replace it with a new air cleaning filter for best performance.

NOTE 1: Clean the filters regularly for best performance and to reduce power consumption.

NOTE 2: Dirty filters cause condensation in the air conditioner which will contribute to the growth of fungi such as mold. It is therefore recommended to clean air filters every 2 weeks.

Model		Part No.
MSZ-GX06NL	MSY-GX09NL	MAC-EMF515FT-E
MSZ-GX09NL	MSY-GX12NL	
MSZ-GX12NL	MSY-GX15NL	
MSZ-GX15NL	MSY-GX18NL	
MSZ-GX18NL	MSY-GX24NL	
MSZ-GX24NL	MSY-GX30NL	
MSZ-GX30NL	MSY-GX36NL	
MSZ-GX36NL		

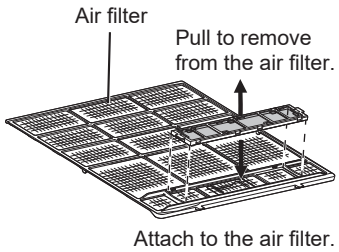

2-2. REFRIGERANT SENSOR

When connecting or disconnecting the connectors, hold the housing of the connector. DO NOT pull the lead wires.
When replacing the existing refrigerant sensor, refer to the service handbook of the model.
For the detailed assembling method, refer to the indoor unit installation manual.

(1) Remove the panel.
(2) Find the cable for the refrigerant sensor on lower right corner of the unit.

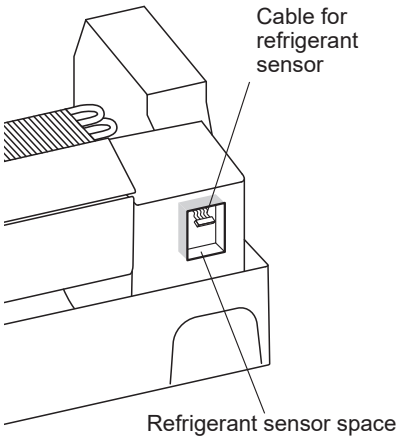

(3) Connect the cable to the refrigerant sensor connector.

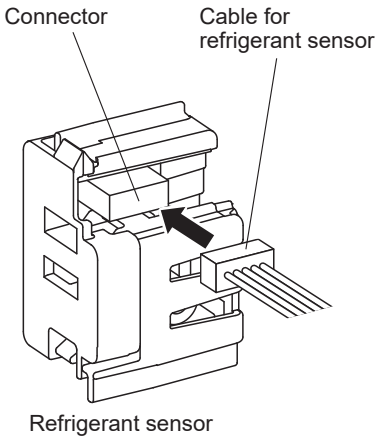

(4) Put in the refrigerant sensor to the refrigerant sensor space.
(5) Close the panel.

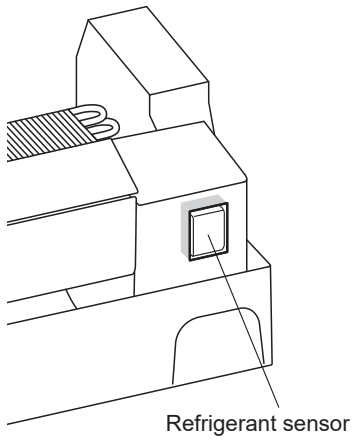

Model	Part No.
MSZ-GX06NL	MAC-100RS-E
MSZ-GX09NL	
MSZ-GX12NL	
MSZ-GX15NL	
MSZ-GX18NL	
MSZ-GX24NL	

MITSUBISHI ELECTRIC CORPORATION

HEAD OFFICE: TOKYO BUILDING, 2-7-3, MARUNOUCHI, CHIYODA-KU, TOKYO 100-8310, JAPAN

© Copyright 2024 MITSUBISHI ELECTRIC CORPORATION
Issued: Sep. 2026 No. OBB950 REVISED EDITION-C
Issued: Apr. 2026 No. OBB950 REVISED EDITION-B
Issued: Mar. 2025 No. OBB950 REVISED EDITION-A
Published: Oct. 2024 No. OBB950
Made in Japan

Specifications subject to change without notice.