MITSUBISHI ELECTRIC

Changes for the Better

AIR CONDITIONING SYSTEMS

SMART MULTI

DATA BOOK

MODEL

MXZ-SM36/48/60NL-U1

MXZ-SM36/42/48/60NLHZ-U1

MXZ-SM72/96/120TL-U1

Preface

R454B refrigerant is mildly flammable, and certain restrictions apply to the installation of units.
When installing new units, moving the existing units, or changing the layout of the room, ensure that installation restrictions are observed.
For details, refer to Installation Manual.

MXZ-SM model

Type(Btu/h)	36,000	48,000	60,000
Model Name	MXZ-SM36NL-U1	MXZ-SM48NL-U1	MXZ-SM60NL-U1

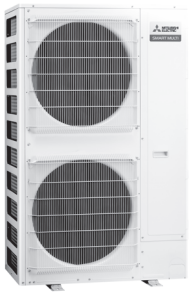

Type(Btu/h)	72,000	96,000	120,000
Model Name	MXZ-SM72TL-U1	MXZ-SM96TL-U1	MXZ-SM120TL-U1

H2i MXZ-SM model

Type(Btu/h)	36,000	42,000	48,000	60,000
Model Name	MXZ-SM36NLHZ-U1	MXZ-SM42NLHZ-U1	MXZ-SM48NLHZ-U1	MXZ-SM60NLHZ-U1

CONTENTS

MXZ-SM-NL-U1, MXZ-SM-NLHZ-U1, MXZ-SM-TL-U1

1. R454B REFRIGERANT 2
   1-1. R454B refrigerant characteristics 2
   1-2. Refrigerant Oil 2
2. INSTALLATION REQUIREMENTS FOR R454B REFRIGERANT 3
   2-1. Precautions for installing indoor units 3
   2-2. Precautions for installing alarm device 6
   2-3. Precautions for mesh ceiling 7
3. SPECIFICATIONS 8
4. EXTERNAL DIMENSIONS 13
5. CENTER OF GRAVITY 16
6. ELECTRICAL WIRING DIAGRAMS 17
7. SOUND LEVELS 21
8. OPERATION TEMPERATURE RANGE 23
9. CAPACITY TABLES 24
   9-1. Selection of indoor and outdoor units 24
   9-2. Correction by temperature 35
   9-3. Correction by total indoor 43
   9-4. Correction by refrigerant piping length 57
   9-5. Correction at frost and defrost 59
10. OPTIONAL PARTS 60
   10-1. JOINT 60
   10-2. HEADER 61
11. ELECTRICAL WORK 62
   11-1. General cautions 62
   11-2. Power cable specifications 63
   11-3. Power supply examples 65
12. M-NET CONTROL 66
   12-1. Transmission cable length limitation 66
   12-2. Transmission cable specifications 68
   12-3. System configuration restrictions 68
   12-4. Address setting 71
13. PIPING DESIGN 77
   13-1. R454B Piping material 77
   13-2. Piping Design 77
   13-3. Refrigerant charging calculation 88
14. OUTDOOR INSTALLATION 90
   14-1. Requirement on installation site 90
   14-2. Spacing 92
   14-3. Piping direction 93
15. PART LOAD CAPACITY CHART 94

1-1. R454B refrigerant characteristics

1-1-1. Chemical characteristics

Since R454B has a high percentage of hydrogen, it is slightly flammable.

<Comparison table of R454B, R32, and R410A characteristics>

	HFC		
Refrigerant	R454B	R32	R410A
Component	HFC32 / HFO1234yf	HFC32	HFC32 / HFC125
Composition (%)	68.9 / 31.1	100	50 / 50
Type	Zeotropic refrigerant mixture	Single refrigerant	Near-azeotropic refrigerant mixture
Chlorine	Not contained	Not contained	Not contained
Safety class	A2L	A2L	A1 / A1
Pressure (physical property) [MPa (abs)] *1	2.82	3.14	3.07
Boiling point [°C]	-50.9	-51.7	-51.4
Vapor pressure (25°C) [MPaG]	1.570	1.588	1.557
Ozone Depletion Potential (ODP) *2	0	0	0
Global Warming Potential (GWP) *3	466	675	2090
Charging	Liquid charging	Liquid and gas charging	Liquid charging
Additional charging when refrigerant leaks	Allowed	Allowed	Allowed

*1 Physical property at 50°C
*2 Relative to CFC11
*3 GWP = Global Warming Potential (Each value is based on the IPCC Forth Assessment Report.)

1-1-2. Pressure characteristics

As shown in the table below, the vapor pressure of R454B is almost as high as that of R32 and R410A at the same temperatures.
As with R32 and R410A perform installation and servicing with high-pressure resistant tools and materials.

<Comparison table of saturated vapor pressure> Unit (MPa)

Temperature (°C)	Refrigerant		
	R454B	R32	R410A
-20	0.26	0.30	0.30
0	0.63	0.71	0.70
20	1.22	1.37	1.34
40	2.12	2.38	2.32
60	3.44	3.83	3.73
65	3.85	4.28	4.17

* The figures are calculated using NIST REFPROP V10.0.

1-1-3. Flammability

R454B may burn slightly if the following conditions (gas concentration and ignition energy) are met.

[1] Flammable gas concentration (when mixed with air)
R454B may burn if within the following flammable range when an ignition source is near. However, in comparison with propane, for example, R454B may not burn unless its concentration is higher than that of propane.
Although the flammable concentration range of R454B could lead to oxygen deficiency (oxygen level of less than 18%), this is not typical in normal working environments.

<Flammable range> Unit (vol%)

	R454B	R32	(Reference) R290 (propane)
Upper limit	23.5	29.3	9.5
Lower limit	11.5	14.4	2.1

[2] Energy required for ignition
R454B requires a large amount of energy for ignition and will not be ignited by static electricity from the human body or sparks from an electronic lighter (energy: a few mJ). Therefore, it can be said that R454B is harder to ignite than propane.

<Minimum ignition energy> Unit (mJ)

	R454B	R32	(Reference) R290 (propane)
Minimum ignition energy	41.1	15	0.246

[3] Combustion speed
Since the combustion speed of R45B is slow, it does not burn explosively like propane.

<Combustion speed> Unit (cm/s)

	R454B	R32	(Reference) R290 (propane)
Combustion speed	5.2	6.7	38.7

As noted above, R454B will not ignite under normal air conditioning or working conditions. However, in the event of ignition, be careful of spreading flames.

1-2. Refrigerant Oil

1-2-1. Refrigerant oil for R454B systems

Unlike the mineral oil used in R22 systems, R454B systems use synthetic oil, which is also used in R410A systems.
However, the properties of synthetic oil may vary by manufacturer, so use the refrigerant oil specified by Mitsubishi Electric.

2-1. Precautions for installing indoor units

[1] Indoor unit installation location

- Do not use gas appliances or spray products near the unit.
  The refrigerant sensor may be triggered by propane, butane, and fluorinated gases contained in spray products, acetone and ethanol in drug or antiseptic solutions, dichloromethane in paint, and smoke from charcoal. In such cases, the sensor may need to be replaced.

■Installation requirements for ducted indoor units

(1) For PEFY model

- Install the indoor unit at a height of 2.5 m or higher.
- Ensure the ceiling height (duct opening) is 2.2 m or higher.

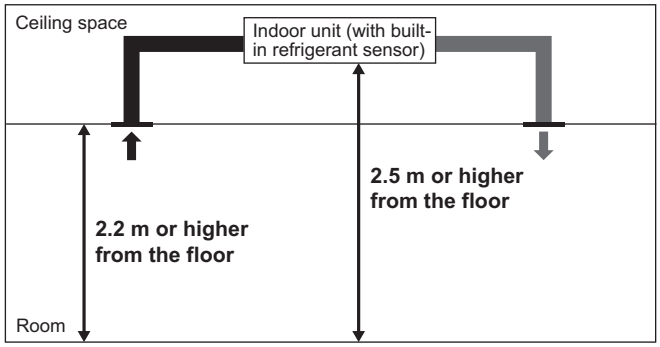

(2) For PVFY model

- Ensure the ceiling height (not duct opening) is 2.2 m or higher.
- There is no limit for duct opening when use PVFY model.

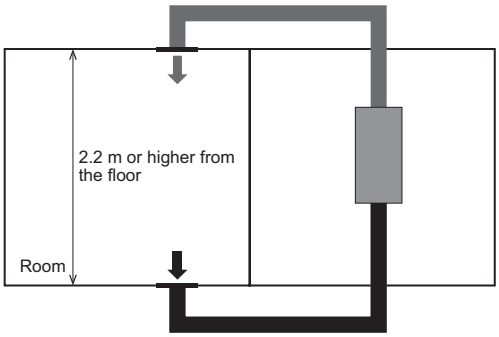

(3) For both PEFY and PVFY model

- An air inlet and outlet is connected directly with a room by ducting. Do NOT use spaces such as a false ceiling or a drop ceiling as a duct for the air inlet or outlet.

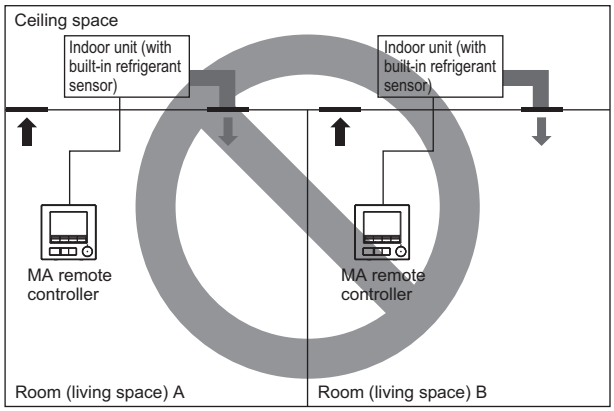

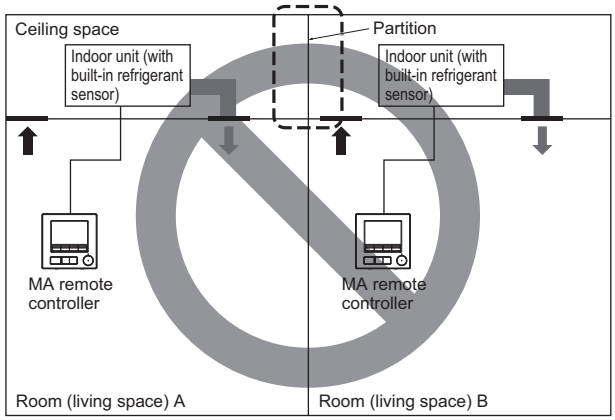

- When installing the unit in a space without a false ceiling or a drop ceiling (or in a space with an egg crate drop ceiling), do not install it in a way that the supply air blows into multiple rooms.

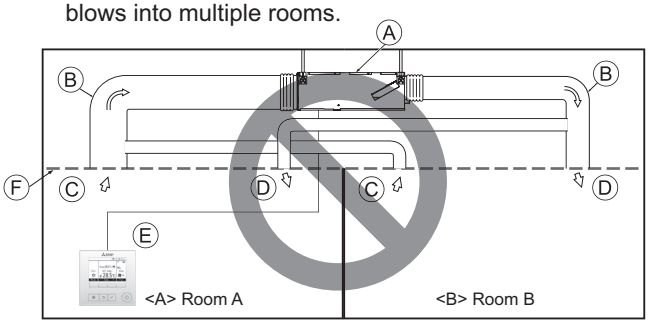

- Directly connect the duct outlet and inlet in the same room.

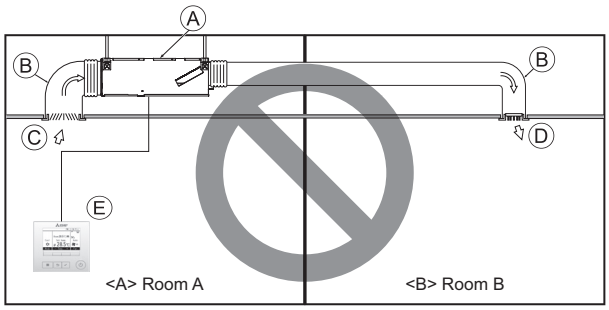

<A> Room A	Ⓐ Indoor unit	Ⓓ Air outlet
<B> Room B	Ⓑ Duct	Ⓔ Remote controller
	Ⓒ Air inlet	Ⓕ Without a false ceiling or drop ceiling (or with an egg crate drop ceiling)

- Operation when ducted indoor units connected to the BC controller or shut off valve kit are installed in the same room as other indoor units (including ductless units)

If the indoor units are installed as follows, change function setting No. 174 to “2” for the ducted indoor units.

(1) Indoor units (including ductless indoor units) connected to different ports on the same BC controller are installed in the same room.
Note that if those indoor units are connected to the same ports, there is no need to change the setting.

(2) Indoor units (including ductless indoor units) connected to different shut off valve kits are installed in the same room.

Note

If the refrigerant sensors in any of the indoor units detect a refrigerant leak or if the refrigerant sensors fail, the fans on all ducted indoor units to which this setting is applied will start.

■Installation requirements for non-ducted indoor units

(1) Leakage height for wall-mounted indoor unit

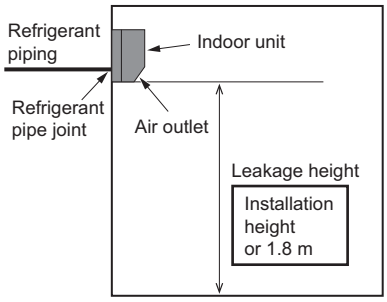

(2) Leakage height for ceiling suspended indoor unit

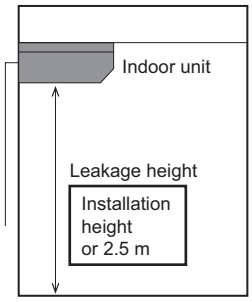

(3) Leakage height for ceiling cassette indoor unit

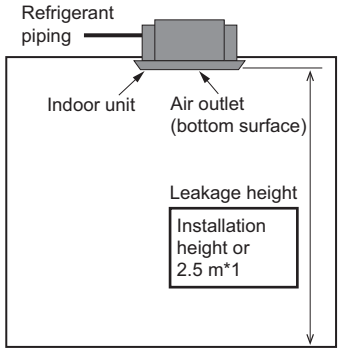

(4) Leakage height for vertical concealed indoor unit

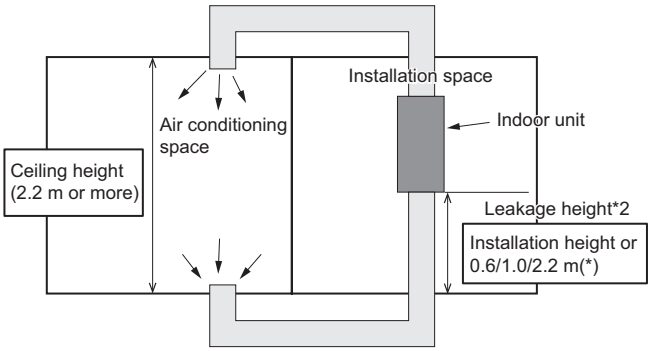

(5) Leakage hight for ceiling concealed indoor unit

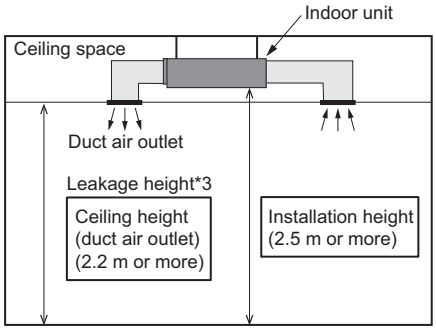

*1 For 1-way cassette model, ensure that the leakage height is 2.2 m or higher from the floor.
*2 If the installation height is unknown, the value marked with (*) in the above illustration is considered as the leakage height.
If the actual installation height is lower than the value marked with (*) in the above illustration, the actual installation height is considered as the leakage height.
If the actual installaiton height is below 0.6 m, the leakage height is regarded as 0.6 m.
*3 When installing a duct for ceiling concealed models, the leakage height is defined as the installation height of the ceiling (duct air outlet).

[2] Enable/disable settings for refrigerant sensor (CNSB short circuit connector)

If the following condition is met, remove the CNSB short circuit connector from the indoor unit to disable the built-in refrigerant sensor. (Models that are not equipped with a built-in refrigerant sensor do not have the CNSB short circuit connector.)

Conditions for removal of the CNSB short circuit connector

Condition	Indoor unit
Safety device is not required (in large space).	Remove the CNSB short circuit connector *1
(For reference) Built-in refrigerant sensor on the indoor unit is used.	Do not remove the CNSB short circuit connector.

*1 Removing the CNSB short circuit connector will disable the built-in refrigerant sensor on the indoor unit expect for vertical concealed model.

2-2. Precautions for installing alarm device (MA remote controller, model name: PAR-43MAAUB or later)

[1] Installation location

Install the MA remote controller as an alarm device in a location where a facility manager works, such as a supervisor room or any room that requires safety devices. (This is not mandatory.)

*If the MA remote controller is used in a supervisor room, set the remote controller as a supervisor remote controller using the Main/Sub setting. For details, refer to the MA remote controller Installation Manual.

[2] Behavior of alarm device

Once the MA remote controller detects a refrigerant leak, it will issue an alarm and sound, and the operation lamp and back-light will blink.

[3] Connection of alarm device

Connect one MA remote controller (PAR-43MAAUB or later) to one indoor unit.
A table below shows the requirements for grouping of indoor units and connecting of multiple remote controllers to a group.

<MA remote controller (PAR-43MAAUB or later)>

Applicable system	Grouping of indoor units	Connection of multiple remote controllers to a group
R454B indoor units equipped with built-in refrigerant sensors	Allowed (*1) (*2) (*3)	Allowed *Do not use a sub remote controller as an alarm device. *Up to two remote controllers can be connected.
R454B indoor units set for large spaces	Allowed (*1)	

*1 Grouping connections between different refrigerant systems or between different system configurations are not allowed.

*2 Grouping connections across rooms are not allowed.

*3 The supervisor remote controller cannot be connected to grouped indoor units.

2-3. Precautions for mesh ceiling

For rooms with a mesh ceiling, note the following points for unit selection and determination of pipe locations.

- If refrigerant leaks from the unit or pipe above the ceiling, it may enter the room through the mesh ceiling.
- In the case shown below, if refrigerant leaks, the leak may be detected in a room with the mesh ceiling, but the shut off valve kit cannot stop the refrigerant leak.

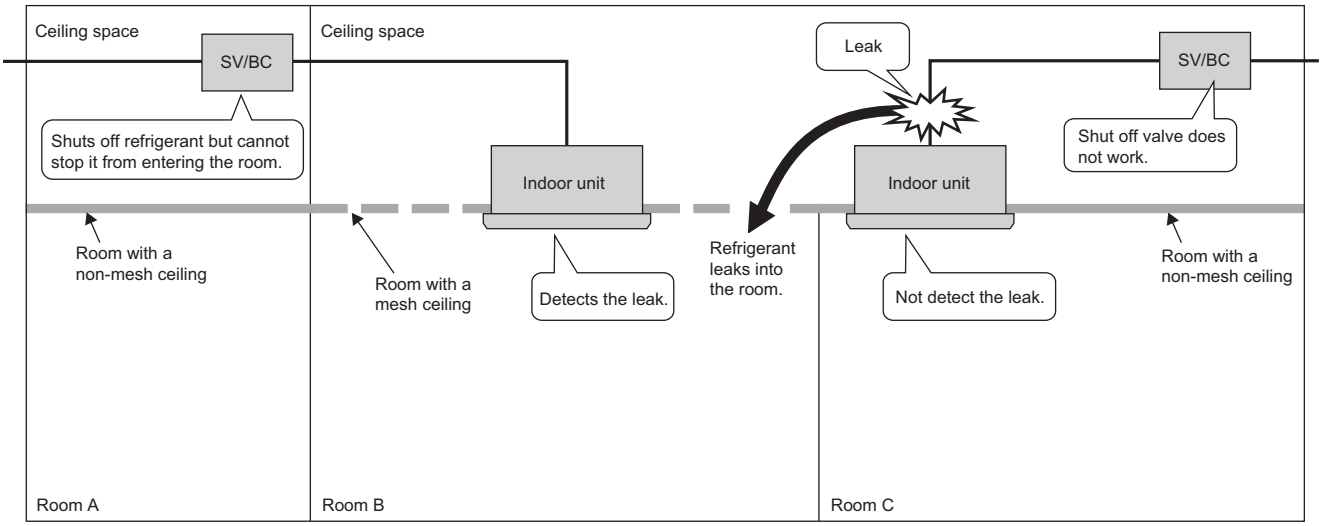

- A mesh ceiling may not allow detection of a refrigerant leak. When installing an indoor unit in a room with a mesh ceiling, ensure that sufficient room space is provided so that there is no safety risk in the event that all refrigerant leaks. (Refer to Installation manual)

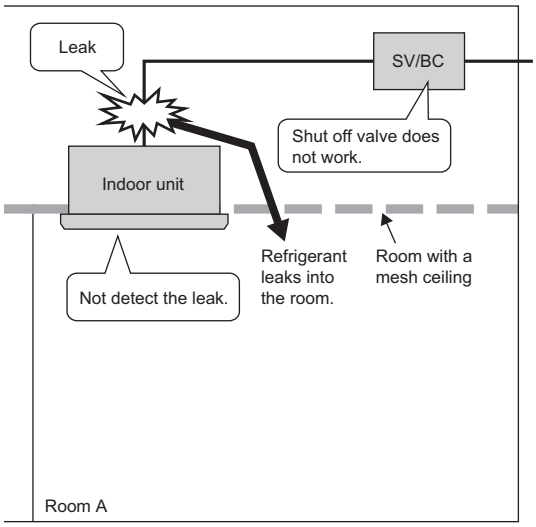

Outdoor model				MXZ-SM36NL-U1			MXZ-SM48NL-U1		
Indoor model				Non-Ducted	Mix	Ducted	Non-Ducted	Mix	Ducted
Cooling	Capacity Rated*1		Btu/h	36,000	36,000	36,000	48,000	48,000	48,000
	Rated power input		W	2,555	2,990	3,600	4,000	4,710	5,715
	Current input (208/230 V)		A	12.5/11.3	14.6/13.2	17.6/15.9	19.5/17.6	23.0/20.8	27.9/25.2
	EER2		Btu/h/W	14.10	12.05	10.00	12.00	10.20	8.40
	SEER2		-	23.00	20.60	18.20	23.00	20.00	17.00
Heating	Capacity Rated 47°F*2		Btu/h	41,000	41,000	41,000	50,000	50,000	50,000
	Capacity Max. 17°F*3		Btu/h	36,000	36,000	36,000	43,000	43,000	43,000
	Capacity Max. 5°F		Btu/h	29,000	29,000	29,000	35,400	35,400	35,400
	Rated power input 47°F*2		W	3,005	3,395	3,880	3,665	4,140	4,730
	Current input (208/230 V)		A	14.7/13.3	16.6/15.0	18.9/17.1	17.9/16.2	20.2/18.3	23.1/20.9
	COP 47°F*2		W/W	4.00	3.54	3.10	4.00	3.54	3.10
	HSPFIV / V		-	11.00/8.75	10.50/8.75	10.00/8.75	10.40/8.35	9.95/8.00	9.50/7.70
Power source				1-phase 208/230 V, 60 Hz					
Breaker size		(ODU only/ODU+IDU)	A	30/40					
Minimum circuit ampacity		(ODU only/ODU+IDU)	A	36/42					
Indoor unit connectable	Total capacity			50 to 130% of outdoor unit capacity					
	Model/ Quantity*4		CITY MULTI	04 - 36/11			04 - 54/12		
			Branch box	06 - 36/4			06 - 36/8		
Sound pressure level (SPL) (measured in anechoic room)			dB <A>	49/53			51/54		
Refrigerant piping diameter	Liquid pipe		in (mm)	3/8 (ø9.52)					
	Gas pipe		in (mm)	5/8 (ø15.88)					
Fan*5	Type × Quantity			Propeller fan × 2					
	Airflow rate		m³/min	112					
			L/s	1,867					
			cfm	3,955					
	Control, Driving mechanism			DC control					
	Motor output		kW	0.070 × 2					
	External static pressure			0					
Compressor	Type × Quantity			Twin rotary hermetic compressor x 1					
	Manufacturer			Mitsubishi Electric Corporation					
	Starting method			Inverter					
	Motor output		kW	2.7			3.4		
	Case heater		kW	0					
	Lubricant			RM68EH 79 oz. (2.3L)					
External finish				Galvanized Steel Sheet <Munsell 3Y 7.8/ 1.1>					
External dimension H × W × D			mm	1,338 × 1,050 × 330 (+25)					
			in	52-11/16 × 41-11/32 × 13 (+1)					
Protection devices	High pressure protection			High pressure switch					
	Inverter circuit (COMP./FAN)			Overcurrent detection, Overheat detection (Heat sink thermistor)					
	Compressor			Compressor thermo, Overcurrent detection, Thermal protector					
	Fan motor			Overheating/Voltage protection					
Refrigerant	Type × original charge			R454B 2 lbs. 11 oz. (1.2 kg)					
	Control			Linear Expansion Valve					
Net weight			lb (kg)	250 (113)					
Heat exchanger				Cross fin and tube					
HIC circuit (HIC: Heat Inter-Changer)				HIC circuit					
Defrosting method				Reversed refrigerant circuit					
Guaranteed operation range	Cooling		D.B.	D.B 23 to 115°F [D.B.-5 to 46°C]*5, *6, *7, *8					
	Heating		W.B.	W.B. -13 to 59°F [W.B. -25 to 15°C]					

Remarks

*1. Rating cooling conditions:
Indoor: 80°F D.B. /67 °F W.B. (26.7°C D.B./19.4°C W.B.)
Outdoor: 95°F D.B. (35.0°C D.B.)

*2. Rating heating conditions:
Indoor: 70°F D.B. (21.1°C D.B.)
Outdoor: 47°F D.B./43°F W.B. (8.3°C D.B./6.1°C W.B.)

*3. Heating conditions:
Indoor: 70°F D.B. (21.1°C D.B.)
Outdoor: 17°F D.B./15°F W.B. (-8.3°C D.B./-9.4°C W.B.)

*4. It cannot be connected to mixed CITY MULTI indoor unit and branch box indoor unit.

*5. 5 to 115°F D.B. (-15 to 46°C D.B.), when an optional Air Outlet Guide is installed. However, this condition does not apply to the indoor units listed in *6.

*6. 50 to 115°F D.B. (10 to 46°C D.B.), when connecting PKFY-L04/06/08/12NLMU type indoor unit.

*7. When the temperature is below 50°F D.B. (10 °C D.B.), noise could potentially occur.

*8. When PCFY is operated in cooling at an outside temperature of 68°F D.B. (20 °C D.B.) or lower, refrigerant noise could potentially occur.

Notes:

- Due to continuing improvement, above specifications are subject to change without notice.
- See the following for unit conversion: kcal/h = kW × 860, Btu/h = kW × 3,412, cfm = m³/min × 35.31, lb = kg × 0.4536
  Above specification data is subject to rounding variation.
- Refer to the indoor unit's service manual for the indoor units specifications.
- Details on foundation work, duct work, insulation work, electrical wiring, power source switch, and other items shall be referred to the Installation Manual.

Outdoor model			MXZ-SM36NLHZ-U1			MXZ-SM42NLHZ-U1			MXZ-SM48NLHZ-U1		
Indoor model			Non-Ducted	Mix	Ducted	Non-Ducted	Mix	Ducted	Non-Ducted	Mix	Ducted
Cooling	Capacity Rated*1	Btu/h	36,000	36,000	36,000	42,000	42,000	42,000	48,000	48,000	48,000
	Rated power input	W	2,485	2,835	3,305	3,135	3,530	4,040	3,665	4,160	4,800
	Current input (208/230 V)	A	12.2/11.0	13.9/12.5	16.2/14.6	15.3/13.9	17.3/15.6	19.8/17.9	17.9/16.2	20.3/18.4	23.5/21.2
	EER2	Btu/h/W	14.50	12.70	10.90	13.40	11.90	10.40	13.10	11.55	10.00
	SEER2	-	23.00	20.35	17.70	21.50	19.50	17.50	23.00	20.50	18.00
Heating	Capacity Rated 47°F*2	Btu/h	42,000	42,000	42,000	48,000	48,000	48,000	54,000	54,000	54,000
	Capacity Max. 17°F*3	Btu/h	42,000	42,000	42,000	48,000	48,000	48,000	54,000	54,000	54,000
	Capacity Max. 5°F	Btu/h	42,000	42,000	42,000	48,000	48,000	48,000	54,000	54,000	54,000
	Capacity Max. -13°F		42,000	42,000	42,000	48,000	48,000	48,000	54,000	54,000	54,000
	Rated power input 47°F*2	W	3,080	3,330	3,620	3,435	3,975	4,690	3,960	4,400	4,950
	Current input (208/230 V)	A	15.1/13.6	16.3/14.7	17.7/16.0	16.8/15.2	19.4/17.6	22.9/20.7	19.4/17.5	21.5/19.5	24.2/21.9
	COP 47°F*2	W/W	4.00	3.70	3.40	4.10	3.54	3.00	4.00	3.60	3.20
	HSPFIV / V	-	12.00/10.65	11.25/10.20	10.50/9.80	11.10/9.80	10.55/9.30	10.00/8.80	11.50/9.80	10.75/9.05	10.00/8.30
Power source			1-phase 208/230 V, 60 Hz								
Breaker size	(ODU only/ODU+IDU)	A	40/45								
Minimum circuit ampacity	(ODU only/ODU+IDU)	A	45/51								
Indoor unit connectable	Total capacity		50 to 130% of outdoor unit capacity								
	Model/ Quantity*4	CITY MULTI	04 - 36/11			04 - 54/12			04 - 54/12		
		Branch box	06 - 36/4			06 - 36/5			06 - 36/8		
Sound pressure level (SPL) (measured in anechoic room)		dB <A>	49/53			50/54			51/54		
Refrigerant piping diameter	Liquid pipe	in (mm)	3/8 (ø9.52)								
	Gas pipe	in (mm)	5/8 (ø15.88)								
Fan*5	Type × Quantity		Propeller fan × 2								
	Airflow rate	m³/min	108								
		L/s	1,800								
		cfm	3,810								
	Control, Driving mechanism		DC control								
	Motor output	kW	0.200 × 2								
	External static pressure		0								
Compressor	Type × Quantity		Twin rotary hermetic compressor × 1								
	Manufacturer		Mitsubishi Electric Corporation								
	Starting method		Inverter								
	Motor output	kW	2.7			3.0			3.2		
	Case heater	kW	0								
	Lubricant		RM68EH 79 oz. (2.3L)								
External finish			Galvanized Steel Sheet <Munsell 3Y 7.8/ 1.1>								
External dimension H × W × D		mm	1,338 × 1,050 × 330 (+25)								
		in	52-11/16 × 41-11/32 × 13 (+1)								
Protection devices	High pressure protection		High pressure switch								
	Inverter circuit (COMP./FAN)		Overcurrent detection, Overheat detection (Heat sink thermistor)								
	Compressor		Compressor thermo, Overcurrent detection, Thermal protector								
	Fan motor		Overheating/Voltage protection								
Refrigerant	Type × original charge		R454B 6 lbs. 10 oz. (3.0kg)								
	Control		Linear Expansion Valve								
Net weight		lb (kg)	283 (128)								
Heat exchanger			Cross fin and tube								
HIC circuit (HIC: Heat Inter-Changer)			HIC circuit								
Defrosting method			Reversed refrigerant circuit								
Guaranteed operation range	Cooling	D.B.	D.B 23 to 115°F [D.B.-5 to 46°C]*5, *6, *7, *8								
	Heating	W.B.	W.B. -13 to 59°F [W.B. -25 to 15°C]								

Remarks

*1. Rating cooling conditions:
Indoor: 80°F D.B. /67 °F W.B. (26.7°C D.B./19.4°C W.B.)
Outdoor: 95°F D.B. (35.0°C D.B.)

*2. Rating heating conditions:
Indoor: 70°F D.B. (21.1°C D.B.)
Outdoor: 47°F D.B./43°F W.B. (8.3°C D.B./6.1°C W.B.)

*3. Heating conditions:
Indoor: 70°F D.B. (21.1°C D.B.)
Outdoor: 17°F D.B./15°F W.B. (-8.3°C D.B./-9.4°C W.B.)

*4. It cannot be connected to mixed CITY MULTI indoor unit and branch box indoor unit.

*5. 5 to 115°F D.B. (-15 to 46°C D.B.), when an optional Air Outlet Guide is installed. However, this condition does not apply to the indoor units listed in *6.

*6. 50 to 115°F D.B. (10 to 46°C D.B.), when connecting PKFY-L04/06/08/12NLMU type indoor unit.

*7. When the temperature is below 50°F D.B. (10 °C D.B.), noise could potentially occur.

*8. When PCFY is operated in cooling at an outside temperature of 68°F D.B. (20 °C D.B.) or lower, refrigerant noise could potentially occur.

Notes:

- Due to continuing improvement, above specifications are subject to change without notice.
- See the following for unit conversion: kcal/h = kW × 860, Btu/h = kW × 3,412, cfm = m³/min × 35.31, lb = kg/0.4536
  Above specification data is subject to rounding variation.
- Refer to the indoor unit's service manual for the indoor units specifications.
- Details on foundation work, duct work, insulation work, electrical wiring, power source switch, and other items shall be referred to the Installation Manual.

Outdoor model				MXZ-SM60NL-U1		
Indoor model				Non-Ducted	Mix	Ducted
Cooling	Capacity Rated*1		Btu/h	60,000	60,000	60,000
	Rated power input		W	5,000	5,610	6,385
	Current input (208/230 V)		A	24.5/22.2	27.5/24.9	31.3/28.3
	EER2		Btu/h/W	12.00	10.70	9.40
	SEER2		-	20.00	18.20	16.40
Heating	Capacity Rated 47°F*2		Btu/h	66,000	66,000	66,000
	Capacity Max. 17°F*3		Btu/h	65,000	65,000	65,000
	Capacity Max. 5°F		Btu/h	46,500	46,500	46,500
	Rated power input 47°F*2		W	4,720	5,230	5,865
	Current input (208/230 V)		A	23.1/20.9	25.6/23.2	28.7/26.0
	COP 47°F*2		W/W	4.10	3.70	3.30
	HSPFIV / V		-	10.50/8.65	10.00/8.05	9.50/7.45
Power source				1-phase 208/230 V, 60 Hz		
Breaker size		(ODU only/ODU+IDU)	A	40/50		
Minimum circuit ampacity		(ODU only/ODU+IDU)	A	45/55		
Indoor unit connectable	Total capacity			50 to 130% of outdoor unit capacity		
	Model/ Quantity*4		CITY MULTI	04 - 72 /12		
			Branch box	06 - 36 / 8		
Sound pressure level (SPL) (measured in anechoic room)			dB <A>	58/59		
Refrigerant piping diameter	Liquid pipe		in (mm)	3/8 (ø9.52)		
	Gas pipe		in (mm)	3/4 (ø19.05)		
Fan*5	Type × Quantity			Propeller fan × 2		
	Airflow rate		m³/min	141		
			L/s	2,350		
			cfm	4,975		
	Control, Driving mechanism			DC control		
	Motor output		kW	0.200 × 2		
	External static pressure			0		
Compressor	Type × Quantity			Twin rotary hermetic compressor x 1		
	Manufacturer			Mitsubishi Electric Corporation		
	Starting method			Inverter		
	Motor output		kW	4.1		
	Case heater		kW	0		
	Lubricant			RM68EH 79 oz. (2.3L)		
External finish				Galvanized Steel Sheet <Munsell 3Y 7.8/ 1.1>		
External dimension H × W × D			mm	1,338 × 1,050 × 330 (+25)		
			in	52-11/16 × 41-11/32 × 13 (+1)		
Protection devices	High pressure protection			High pressure switch		
	Inverter circuit (COMP./FAN)			Overcurrent detection, Overheat detection(Heat sink thermistor)		
	Compressor			Compressor thermo, Overcurrent detection, Thermal protector		
	Fan motor			Overheating/Voltage protection		
Refrigerant	Type × original charge			R454B 6 lbs. 10 oz. (3.0kg)		
	Control			Linear Expansion Valve		
Net weight			lb (kg)	278 (126)		
Heat exchanger				Cross fin and tube		
HIC circuit (HIC: Heat Inter-Changer)				HIC circuit		
Defrosting method				Reversed refrigerant circuit		
Guaranteed operation range	Cooling		D.B.	D.B 23 to 115°F [D.B.-5 to 46°C]*5, *6, *7, *8		
	Heating		W.B.	W.B. -13 to 59°F [W.B. -25 to 15°C]		

Remarks

*1. Rating cooling conditions:
Indoor: 80°F D.B. /67 °F W.B. (26.7°C D.B./19.4°C W.B.)
Outdoor: 95°F D.B. (35.0°C D.B.)

*2. Rating heating conditions:
Indoor: 70°F D.B. (21.1°C D.B.)
Outdoor: 47°F D.B./43°F W.B. (8.3°C D.B./6.1°C W.B.)

*3. Heating conditions:
Indoor: 70°F D.B. (21.1°C D.B.)
Outdoor: 17°F D.B./15°F W.B. (-8.3°C D.B./-9.4°C W.B.)

*4. It cannot be connected to mixed CITY MULTI indoor unit and branch box indoor unit.

*5. 5 to 115°F D.B. (-15 to 46°C D.B.), when an optional Air Outlet Guide is installed. However, this condition does not apply to the indoor units listed in *6.

*6. 50 to 115°F D.B. (10 to 46°C D.B.), when connecting PKFY-L04/06/08/12NLMU type indoor unit.

*7. When the temperature is below 50°F D.B. (10 °C D.B.), noise could potentially occur.

*8. When PCFY is operated in cooling at an outside temperature of 68°F D.B. (20 °C D.B.) or lower, refrigerant noise could potentially occur.

Note:

- Due to continuing improvement, above specifications are subject to change without notice.
- See the following for unit conversion: kcal/h = kW × 860, Btu/h = kW × 3,412, cfm = m³/min × 35.31, lb = kg/0.4536
  Above specification data is subject to rounding variation.
- Refer to the indoor unit's service manual for the indoor units specifications.
- Details on foundation work, duct work, insulation work, electrical wiring, power source switch, and other items shall be referred to the Installation Manual.

Outdoor model				MXZ-SM60NLHZ-U1		
Indoor model				Non-Ducted	Mix	Ducted
Cooling	Capacity Rated*1		Btu/h	60,000	60,000	60,000
	Rated power input		W	5,000	5,610	6,385
	Current input (208/230 V)		A	24.5/22.2	27.5/24.9	31.3/28.3
	EER2		Btu/h/W	12.00	10.70	9.40
	SEER2		-	20.00	18.20	16.40
Heating	Capacity Nominal*9 47°F*2		Btu/h	66,000	66,000	66,000
		Power input	W	4,720	5,230	5,865
		Current input (208/230V)	A	23.1/20.9	25.6/23.2	28.7/26.0
		COP	W/W	4.10	3.70	3.30
	Capacity Rated 47°F*2		Btu/h	62,000	61,000	60,000
		Power input	W	4,435	4,835	5,330
		Current input (208/230V)	A	21.7/19.7	23.7/21.4	26.1/23.6
		COP	W/W	4.10	3.70	3.30
	Capacity Max. 17°F*3		Btu/h	72,500	72,500	72,500
	Capacity Max. 5°F		Btu/h	62,000	61,000	60,000
	Capacity Max. -13°F		Btu/h	52,500	52,500	52,500
	HSPFIV / V		-	10.90/9.00	10.45/8.75	10.00/8.5
Power source				1-phase 208/230 V, 60 Hz		
Breaker size		(ODU only/ODU+IDU)	A	45/55		
Minimum circuit ampacity		(ODU only/ODU+IDU)	A	45/55		
Indoor unit connectable	Total capacity			50 to 130% of outdoor unit capacity		
	Model/ Quantity*4		CITY MULTI	04 - 72 /12		
			Branch box	06 - 36 / 8		
Sound pressure level (SPL) (measured in anechoic room)			dB <A>	58/59		
Refrigerant piping diameter	Liquid pipe		in (mm)	3/8 (ø9.52)		
	Gas pipe		in (mm)	3/4 (ø19.05)		
Fan*5	Type × Quantity			Propeller fan × 2		
	Airflow rate		m³/min	141		
			L/s	2,350		
			cfm	4,975		
	Control, Driving mechanism			DC control		
	Motor output		kW	0.200 × 2		
	External static pressure			0		
Compressor	Type × Quantity			Twin rotary hermetic compressor x 1		
	Manufacturer			Mitsubishi Electric Corporation		
	Starting method			Inverter		
	Motor output		kW	4.1		
	Case heater		kW	0		
	Lubricant			RM68EH 78 oz. (2.3L)		
External finish				Galvanized Steel Sheet <Munsell 3Y 7.8/ 1.1>		
External dimension H × W × D			mm	1,338 × 1,050 × 330 (+25)		
			in	52-11/16 × 41-11/32 × 13 (+1)		
Protection devices	High pressure protection			High pressure switch		
	Inverter circuit (COMP./FAN)			Overcurrent detection, Overheat detection(Heat sink thermistor)		
	Compressor			Compressor thermo, Overcurrent detection, Thermal protector		
	Fan motor			Overheating/Voltage protection		
Refrigerant	Type × original charge			R454B 6 lbs. 10 oz. (3.0kg)		
	Control			Linear Expansion Valve		
Net weight			lb (kg)	283 (128)		
Heat exchanger				Cross fin and tube		
HIC circuit (HIC: Heat Inter-Changer)				HIC circuit		
Defrosting method				Reversed refrigerant circuit		
Guaranteed operation range	Cooling		D.B.	D.B 23 to 115°F [D.B.-5 to 46°C]*5, *6, *7, *8		
	Heating		W.B.	W.B. -13 to 59°F [W.B. -25 to 15°C]		

Remarks

*1. Rating cooling conditions:
Indoor: 80°F D.B. /67 °F W.B. (26.7°C D.B./19.4°C W.B.)
Outdoor: 95°F D.B. (35.0°C D.B.)

*2. Rating heating conditions:
Indoor: 70°F D.B. (21.1°C D.B.)
Outdoor: 47°F D.B./43°F W.B. (8.3°C D.B./6.1°C W.B.)

*3. Heating conditions:
Indoor: 70°F D.B. (21.1°C D.B.)
Outdoor: 17°F D.B./15°F W.B. (-8.3°C D.B./-9.4°C W.B.)

*4. It cannot be connected to mixed CITY MULTI indoor unit and branch box indoor unit.

*5. 5 to 115°F D.B. (-15 to 46°C D.B.), when an optional Air Outlet Guide is installed. However, this condition does not apply to the indoor units listed in *6.

*6. 50 to 115°F D.B. (10 to 46°C D.B.), when connecting PKFY-L04/06/08/12NLMU type indoor unit.

*7. When the temperature is below 50°F D.B. (10 °C D.B.), noise could potentially occur.

*8. When PCFY is operated in cooling at an outside temperature of 68°F D.B. (20 °C D.B.) or lower, refrigerant noise could potentially occur.

*9. Nominal conditions are subject to AHRI210/240.

Note:

- Due to continuing improvement, above specifications are subject to change without notice.
- See the following for unit conversion: kcal/h = kW × 860, Btu/h = kW × 3,412, cfm = m³/min × 35.31, lb = kg/0.4536
  Above specification data is subject to rounding variation.
- Refer to the indoor unit's service manual for the indoor units specifications.
- Details on foundation work, duct work, insulation work, electrical wiring, power source switch, and other items shall be referred to the Installation Manual.

Outdoor model				MXZ-SM72TL		MXZ-SM96TL		MXZ-SM120TL	
Indoor Model				Non-Ducted	Ducted	Non-Ducted	Ducted	Non-Ducted	Ducted
Cooling capacity (Nominal)*1			kW	21.1		28.1		35.2	
			Btu/h	72,000		96,000		120,000	
		Power input	kW	6.32		8.89		10.7	
		Current input	A	18.5-16.7		26.0-23.6		31.4-28.3	
	(Rated)		kW	20.2		27		33.4	
			Btu/h	69,000		92,000		114,000	
		Power input	kW	5.44	5.52	7.55	7.55	9.35	9.67
		Current input	A	15.9-14.4	16.2-14.6	22.1-20.0	22.1-20.0	27.4-24.8	28.3-25.6
Heating capacity (Nominal)*2			kW	23.4		31.7		37.8	
			Btu/h	80,000		108,000		129,000	
		Power input	kW	5.69		8.28		9.91	
		Current input	A	16.7-15.1		24.2-21.9		29.0-26.3	
	(Rated)		kW	22.6		30.2		36.0	
			Btu/h	76,000		103,000		123,000	
		Power input	kW	5.09	5.31	7.46	7.89	9.15	9.47
		Current input	A	14.9-13.5	15.5-14.1	21.8-19.7	23.1-20.9	26.8-24.2	27.7-25.1
Power source				3-phase 3-wire 208-230V 60Hz					
Breaker size		(ODU only/ODU+IDU)	A	40/60				50/70	
Minimum Circuit Ampacity		(ODU only/ODU+IDU)	A	32/50		46/64		49/67	
Maximum Overcurrent Protection		(ODU only/ODU+IDU)	A	57/75		82/100		88/106	
Indoor unit connectable	Total capacity			50 to 130% of outdoor unit cooling rated capacity					
	Model/ Quantity *3	CITY MULTI		04 - 72 / 23		04 - 96 / 30		04 - 96 / 30	
		Branch box		06 - 36 / 12		06 - 36 / 12		06 - 36 / 12	
Sound pressure level (SPL) (measured in anechoic room)		dB <A>		53/54		58/59		61/62	
Refrigerant piping diameter	Liquid pipe	in (mm)		3/8 (9.52) *4				1/2 (12.7)	
	Gas pipe	in (mm)		7/8 (22.2)				1-1/8 (28.58)	
Fan*5	Type × Quantity			Propeller Fan × 2					
	Airflow rate	m³/min		149		179		208	
		L/s		2,480		2,980		3,470	
		cfm		5,260		6,320		7,345	
	Control, Driving mechanism			DC control					
	Motor output	kW		0.285 + 0.285					
	External static press.			0 in.WG (0 Pa) / 0.12 in.WG (30 Pa)					
Compressor	Type × Quantity			Scroll hermetic compressor× 1					
	Manufacturer			Siam Compressor Industry Co., Ltd.					
	Starting method			Inverter					
	Motor output	kW		4.0		5.3		6.8	
	Case heater	kW		0					
	Lubricant			RM68EH 101oz. (3.0L)					
External finish				Galvanized Steel Sheet Munsell No. 3Y 7.8/1.1					
External dimension H × W × D		mm		1,662 × 1,050 × 460 (+45)					
		in		65-7/16 × 41-11/32 × 18-7/64 (+ 1-49/64)					
Protection devices	High pressure protection			High pressure switch					
	Inverter circuit (COMP./FAN)			Overcurrent detection, Overheat detection (Heat sink thermistor)					
	Compressor			Compressor thermistor, Overcurrent detection					
	Fan motor			Overheating, Voltage protection					
Refrigerant	Type × original charge			R454B 15 LBS. 3 OZ. (6.9 kg)					
	Control			Linear expansion valve					
Net weight		lb (kg)		421 (191)					
Heat exchanger				Cross fin and copper tube					
HIC circuit (HIC: Heat Inter-Changer)				Double pipe heat exchanger					
Defrosting method				Reversed refrigerant circuit					
Standard attachment	Document			Installation Manual					
	Accessory			Joint pipe×1 set, Grounding lead wire ×1					
Optional parts				Joint: CMY-Y62-G-E/CMY-Y62-GA-E, Header: CMY-Y64/68-G-E					
Guaranteed operation range	Cooling	D.B.		-5 to 46°C [23 to 115°F]*6*7*8*9					
	Heating	W.B.		-25 to 15°C [-13 to 59°F]					

*1. Nominal cooling conditions:
Indoor: 80°F D.B. /67 °F W.B. (26.7°C D.B./19.4°C W.B.)
Outdoor: 95°F D.B. (35.0°C D.B.)
*2. Nominal heating conditions:
Indoor: 70°F D.B. (21.1°C D.B.)
Outdoor: 47°F D.B./43°F W.B. (8.3°C D.B./6.1°C W.B.)
*3. It cannot be connected to mixed CITY MULTI indoor unit and branch box indoor unit.
*4. Liquid pipe diameter: 12.7mm, when further piping length is longer than 90m, and when PEFY-L/M72 or M96 is connected.
*5. It is possible to set the external static pressure to 30 Pa by Dip Switch.
*6. 5 to 115°F D.B. (-15 to 46°C D.B.), when an optional Air Outlet Guide is installed. However, this condition does not apply to the indoor units listed in *7.
*7. 50 to 115°F D.B. (10 to 46°C D.B.), when connecting PKFY-L/M04/06/08/12NLMU, PLFY-L/M05/08/12/15/18NFMU, PEFY-L/M06NMSU and PEFY-L/M06NMAU type indoor unit.
*8. When the temperature is below 50°F D.B. (10 °C D.B.) with branch box system, noise could potentially occur.
*9. When PCFY is operated in cooling at an outside temperature of 68°F D.B. (20 °C D.B.) or lower, refrigerant noise could potentially occur.

Notes:
- Nominal conditions *1, *2 are subject to AHRI 1230.
- Due to continuing improvement, above specifications are subject to change without notice.
- See the following for unit conversion: kcal/h = kW × 860, Btu/h = kW × 3,412, cfm = m³/min × 35.31, lb = kg × 0.4536
  Above specification data is subject to rounding variation.
- Refer to the indoor unit's service manual for the indoor units specifications.
- Details on foundation work, duct work, insulation work, electrical wiring, power source switch, and other items shall be referred to the Installation Manual.

MXZ-SM36, 48NL-U1

Unit: mm<in.>

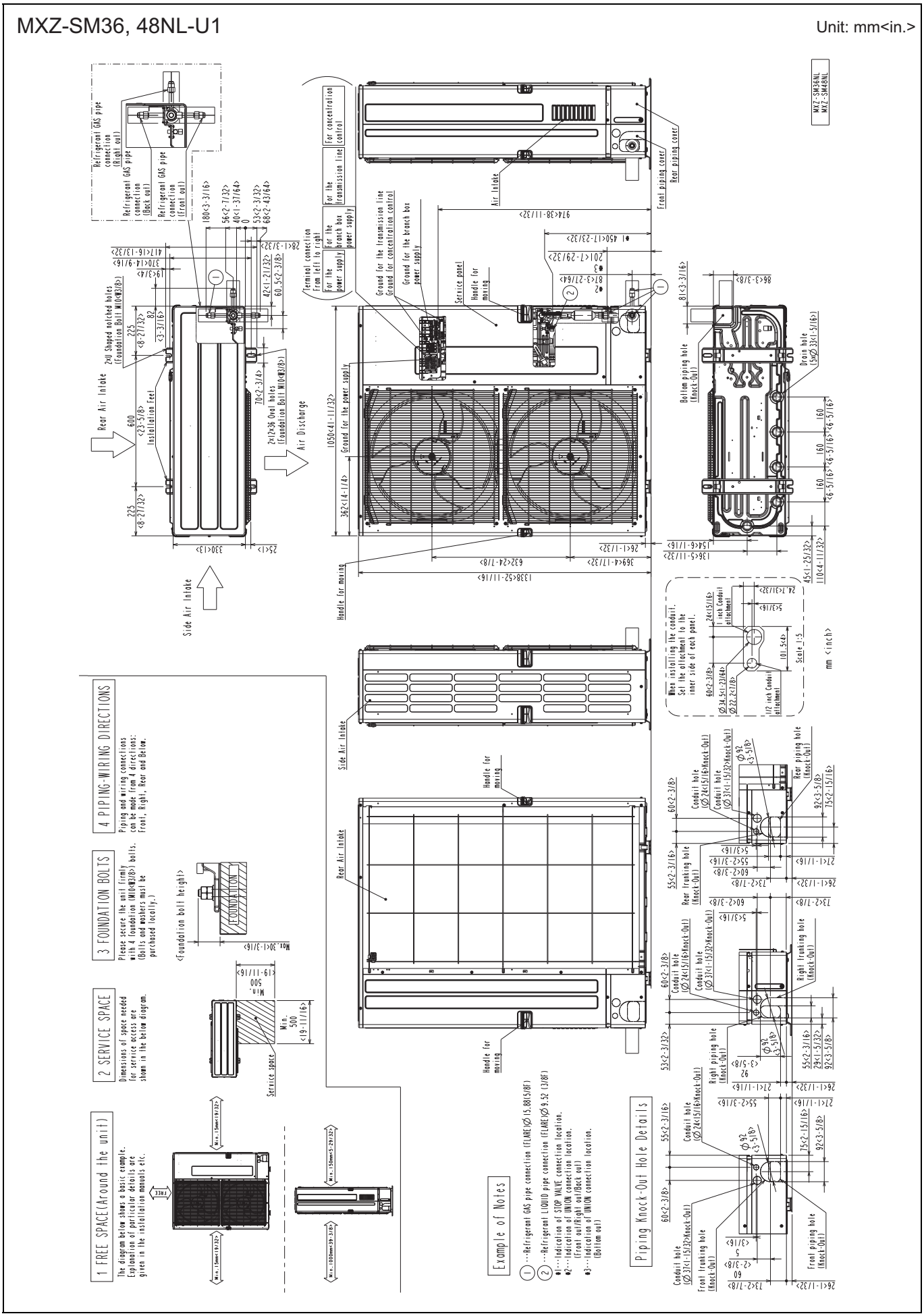

MXZ-SM60NL-U1
MXZ-SM36, 42, 48, 60NLHZ-U1

Unit: mm<in.>

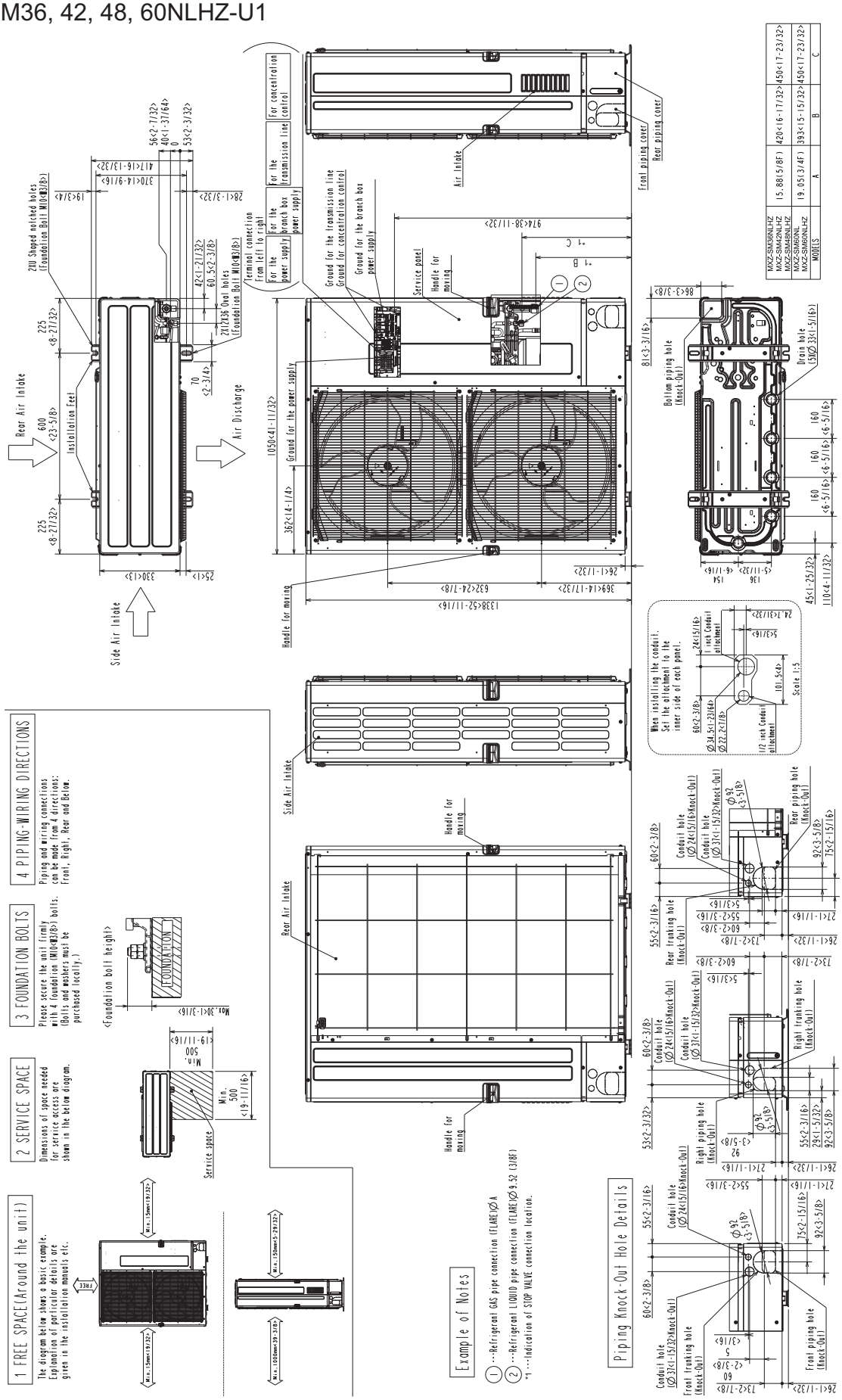

MXZ-SM72, 96, 120TL-U1

Unit: mm<in.>

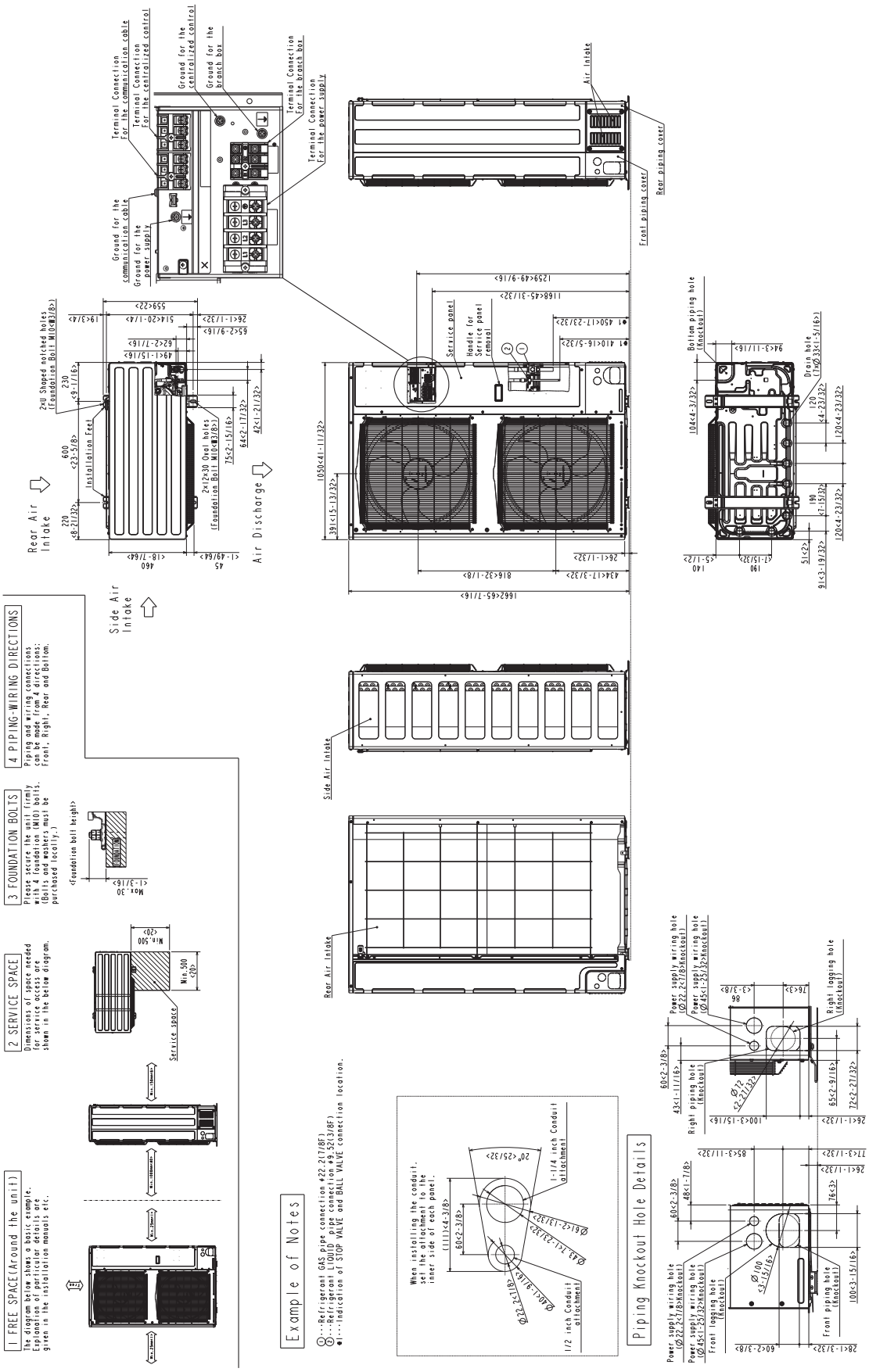

MXZ-SM36, 48, 60NL-U1
MXZ-SM36, 42, 48, 60NLHZ-U1
MXZ-SM72, 96, 120TL-U1

Unit: mm[in.]

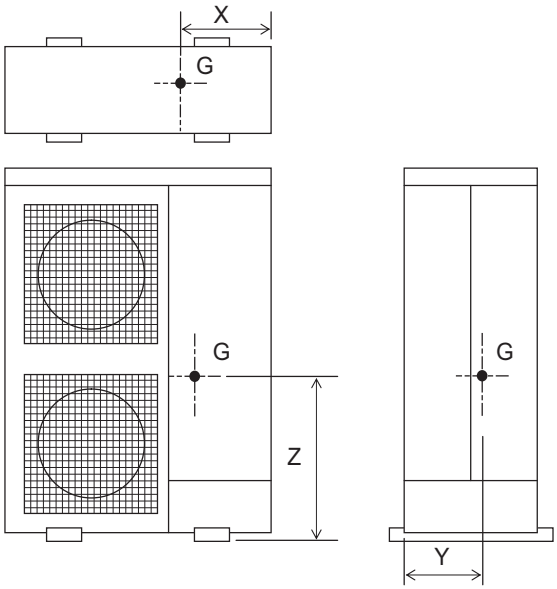

Model	X	Y	Z
MXZ-SM36, 48NL-U1	370 [14-9/16]	160 [6-19/64]	565 [22-7/32]
MXZ-SM60NL-U1	410 [16-9/64]	175 [6-57/64]	560 [22-3/64]
MXZ-SM36, 42, 48, 60NLHZ-U1	380 [15]	165 [6-1/2]	575 [22-41/64]
MXZ-SM72, 96, 120TL-U1	420 [16-17/32]	205 [8-5/64]	735 [28-15/16]

MXZ-SM36, 48NL-U1

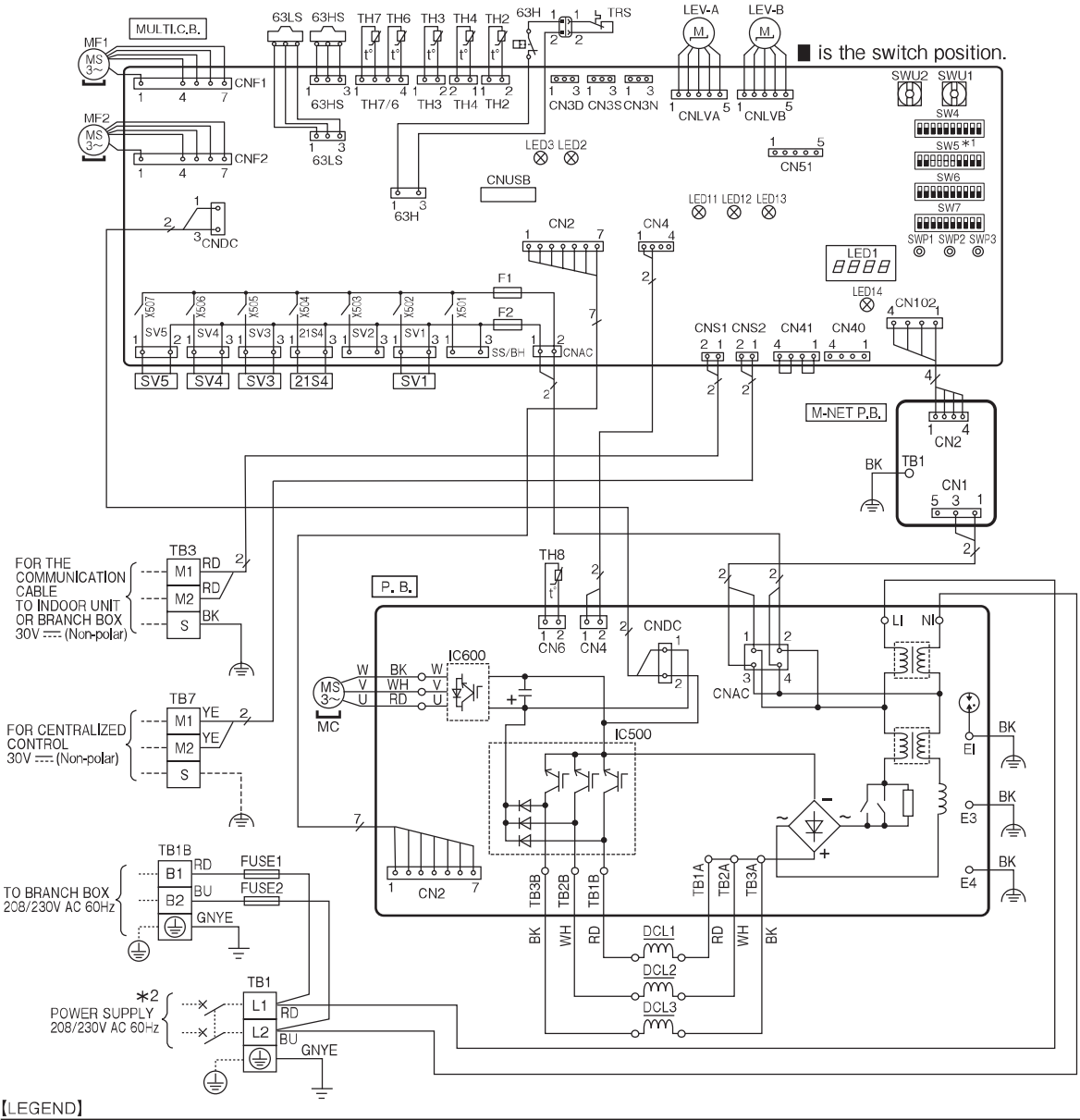

【LEGEND】

SYMBOL	NAME	SYMBOL	NAME	SYMBOL	NAME
TB1	Terminal Block 〈Power Supply〉	TH6	Thermistor〈Suction Pipe〉	SWU1	Switch〈Unit Address Selection, ones digit〉
TB1B	Terminal Block 〈Branch box〉	TH7	Thermistor 〈Ambient〉	SWU2	Switch〈Unit Address Selection, tens digit〉
TB3	Terminal Block 〈Indoor/Outdoor, Branch box/Outdoor Transmission Line〉	TH8	Thermistor 〈Heat Sink〉	SWP3	Switch〈Function Selection〉
		TRS	Thermal Protector	SS/BH	Connector〈Connection for Option〉
TB7	Terminal Block 〈Centralized Control Transmission Line〉	LEV-A, LEV-B	Linear Expansion Valve	CN3D	Connector〈Connection for Option〉
		DCL1, DCL2, DCL3	Reactor	CN3S	Connector〈Connection for Option〉
FUSE1, FUSE2	Fuse〈T20AL250V〉	P.B.	Power Circuit Board	CN3N	Connector〈Connection for Option〉
MC	Motor for Compressor	U/V/W	Connection Terminal〈U/V/W-Phase〉	CN51	Connector〈Connection for Option〉
MF1, MF2	Fan Motor	LI	Connection Terminal〈L1-Phase〉	LED1	LED〈Operation Inspection Display〉
21S4	Solenoid Valve Coil〈4-Way Valve〉	NI	Connection Terminal〈L2-Phase〉	LED11	Normal operation〈Lit〉/IC Error〈Blink〉
63H	High Pressure Switch	TB1A, TB2A, TB3A TB1B, TB2B, TB3B	Connection Terminal〈Reactor〉	LED12	Normal operation〈Lit〉Error〈Blink〉 for central control transmission
63HS	High Pressure Sensor				
63LS	Low Pressure Sensor	IC500	Converter	LED13	Normal operation〈Lit〉Error〈Blink〉 for indoor/outdoor transmission
SV1	Solenoid Valve Coil〈Bypass Valve〉	IC600	Inverter		
SV3	Solenoid Valve Coil〈Bypass Valve〉	EI, E3, E4	ConnectionTerminal〈Electrical Parts Box〉	LED14	LED〈Power Supply to Main Microcomputer〉
SV4	Solenoid Valve Coil〈Liquid Shut-off Valve〉	MULTI.C.B	Multi Controller Circuit Board	F1, F2	Fuse〈T6.3AL250V〉
SV5	Solenoid Valve Coil〈Gas Shut-off Valve〉	SW4	Switch 〈Display Selection〉	X501~X507	Relay
TH2	Thermistor〈HIC Pipe〉	SW5	Switch 〈Model Selection〉	CNUSB	USB TYPE A
TH3	Thermistor〈Outdoor Liquid Pipe〉	SW6	Switch 〈Function Selection/Test Run〉	M-NET P.B.	M-NET Power Circuit Board
TH4	Thermistor〈Compressor〉	SW7	Switch 〈Function Selection〉	TB1	ConnectionTerminal〈Electrical Parts Box〉

*1 MODEL SELECTION
The black square (■) indicates a switch position.

MODEL	SW5	MODEL	SW5
MXZ-SM36NL	ON OFF 3 4 5 6	MXZ-SM48NL	ON OFF 3 4 5 6

*2 Use copper supply wires.
Utiliser des fils d'alimentation en cuivre.

MXZ-SM60NL-U1

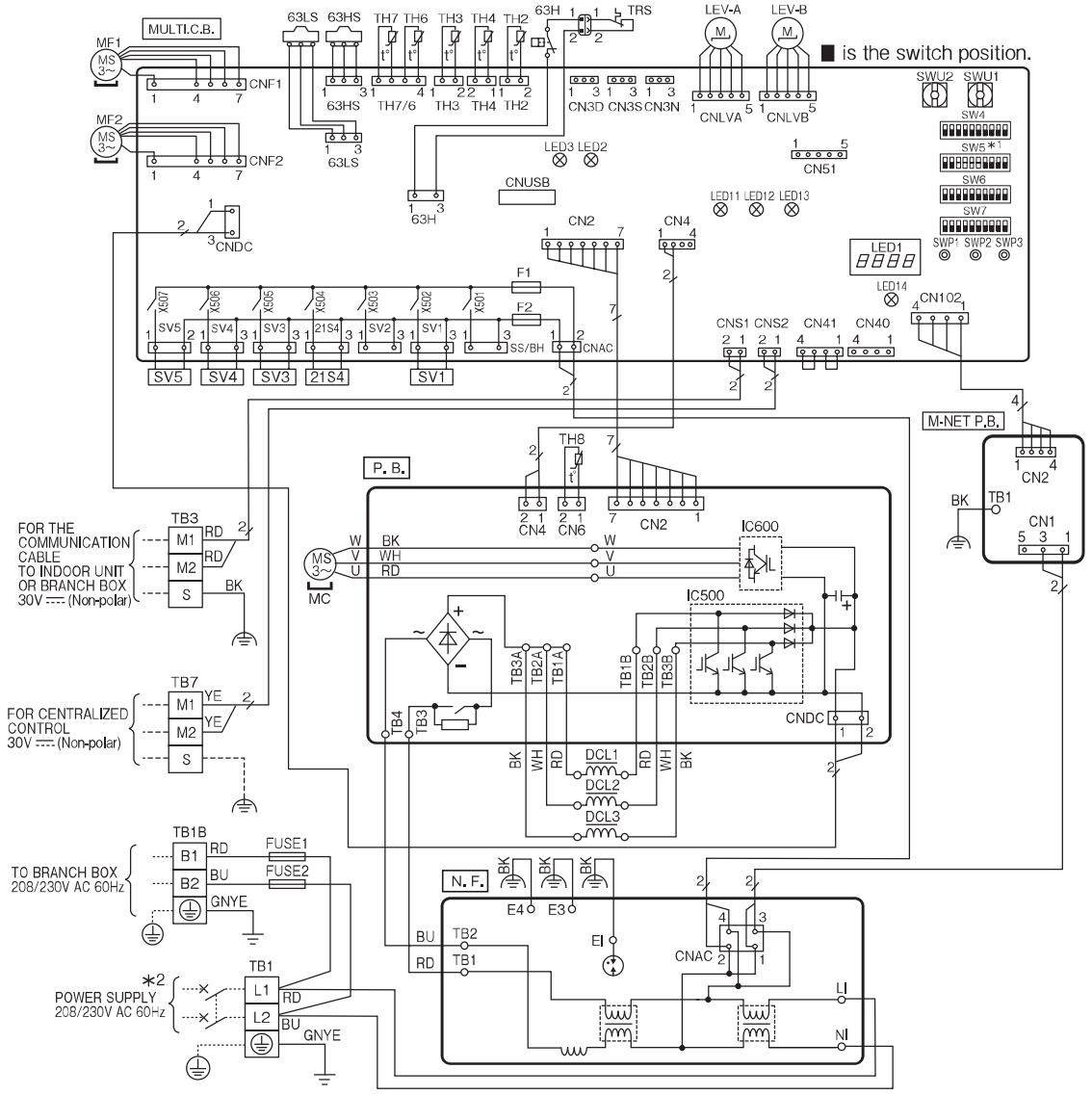

【LEGEND】

SYMBOL	NAME	SYMBOL	NAME	SYMBOL	NAME
TB1	Terminal Block 〈Power Supply〉	TH7	Thermistor〈Ambient〉	SW7	Switch〈Function Selection〉
TB1B	Terminal Block 〈Branch box〉	TH8	Thermistor〈Heat Sink〉	SWU1	Switch〈Unit Address Selection, ones digit〉
TB3	Terminal Block 〈Indoor/Outdoor, Branch box/Outdoor Transmission Line〉	TRS	Thermal Protector	SWU2	Switch〈Unit Address Selection, tens digit〉
		LEV-A, LEV-B	Linear Expansion Valve	SWP3	Switch〈Function Selection〉
TB7	Terminal Block 〈Centralized Control Transmission Line〉	DCL1, DCL2, DCL3	Reactor	SS/BH	Connector〈Connection for Option〉
		N.F.	Noise Filter Board	CN3D	Connector〈Connection for Option〉
FUSE1, FUSE2	Fuse〈T20AL250V〉	LI	Connection Terminal〈L1-Phase〉	CN3S	Connector〈Connection for Option〉
MC	Motor for Compressor	NI	Connection Terminal〈L2-Phase〉	CN3N	Connector〈Connection for Option〉
MF1, MF2	Fan Motor	TB1, TB2	ConnectionTerminal〈Power Circuit Board〉	CN51	Connector〈Connection for Option〉
21S4	Solenoid Valve Coil〈4-Way Valve〉	EI, E3, E4	ConnectionTerminal〈Electrical Parts Box〉	LED1	LED〈Operation Inspection Display〉
63H	High Pressure Switch	P.B.	Power Circuit Board	LED11	Normal operation〈Lit〉/IC Error〈Blink〉
63HS	High Pressure Sensor	TB3, TB4	ConnectionTerminal〈Noise Filter Board〉	LED12	Normal operation〈Lit〉Error〈Blink〉 for central control transmission
63LS	Low Pressure Sensor	U/V/W	Connection Terminal〈U/V/W-Phase〉		
SV1	Solenoid Valve Coil〈Bypass Valve〉	TB1A, TB2A, TB3A TB1B, TB2B, TB3B	Connection Terminal〈Reactor〉	LED13	Normal operation〈Lit〉Error〈Blink〉 for indoor/outdoor transmission
SV3	Solenoid Valve Coil〈Bypass Valve〉				
SV4	Solenoid Valve Coil〈Liquid Shut-off Valve〉	IC500	Converter	LED14	LED〈Power Supply to Main Microcomputer〉
SV5	Solenoid Valve Coil〈Gas Shut-off Valve〉	IC600	Inverter	F1, F2	Fuse〈T6.3AL250V〉
TH2	Thermistor〈HIC Pipe〉	MULTI.C.B	Multi Controller Circuit Board	X501~X507	Relay
TH3	Thermistor〈Outdoor Liquid Pipe〉	SW4	Switch〈Display Selection〉	CNUSB	USB TYPE A
TH4	Thermistor〈Compressor〉	SW5	Switch〈Model Selection〉	M-NET P.B.	M-NET Power Circuit Board
TH6	Thermistor〈Suction Pipe〉	SW6	Switch〈Function Selection/Test Run〉	TB1	ConnectionTerminal〈Electrical Parts Box〉

*1 MODEL SELECTION
The black square (■) indicates a switch position.

MODEL	SW5
MXZ-SM60NL	ON OFF 3 4 5 6

*2 Use copper supply wires.
Utiliser des fils d'alimentation en cuivre.

MXZ-SM36, 42, 48, 60NLHZ-U1

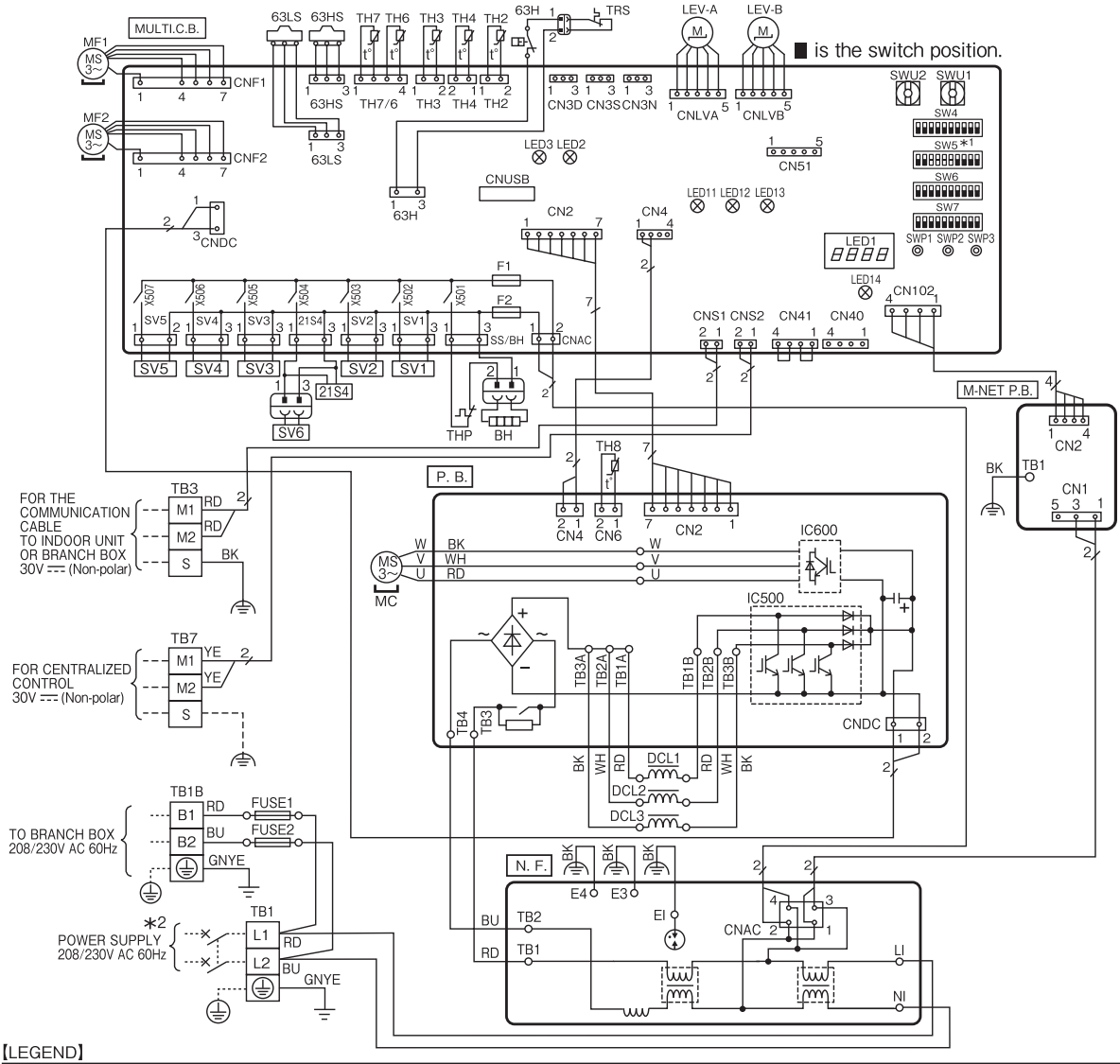

【LEGEND】

SYMBOL	NAME	SYMBOL	NAME	SYMBOL	NAME
TB1	Terminal Block 〈Power Supply〉	TH4	Thermistor〈Compressor〉	SW6	Switch〈Function Selection/Test Run〉
TB1B	Terminal Block 〈Branch box〉	TH6	Thermistor〈Suction Pipe〉	SW7	Switch〈Function Selection〉
TB3	Terminal Block 〈Indoor/Outdoor, Branch box/Outdoor Transmission Line〉	TH7	Thermistor〈Ambient〉	SWU1	Switch〈Unit Address Selection, ones digit〉
		TH8	Thermistor〈Heat Sink〉	SWU2	Switch〈Unit Address Selection, tens digit〉
TB7	Terminal Block 〈Centralized Control Transmission Line〉	TRS	Thermal Protector<Compressor>	SWP3	Switch〈Function Selection〉
		LEV-A, LEV-B	Linear Expansion Valve	SS/BH	Base Heater
FUSE1, FUSE2	Fuse〈T20AL250V〉	DCL1, DCL2, DCL3	Reactor	CN3D	Connector〈Connection for Option〉
MC	Motor for Compressor	N.F.	Noise Filter Board	CN3S	Connector〈Connection for Option〉
MF1, MF2	Fan Motor	LI	Connection Terminal〈L1-Phase〉	CN3N	Connector〈Connection for Option〉
21S4	Solenoid Valve Coil〈4-Way Valve〉	NI	Connection Terminal〈L2-Phase〉	CN51	Connector〈Connection for Option〉
63H	High Pressure Switch	TB1, TB2	ConnectionTerminal〈Power Circuit Board〉	LED1	LED〈Operation Inspection Display〉
63HS	High Pressure Sensor	EI, E3, E4	ConnectionTerminal〈Electrical Parts Box〉	LED11	Normal operation(Lit)/IC Error(Blink)
63LS	Low Pressure Sensor	P.B.	Power Circuit Board	LED12	Normal operation(Lit)Error(Blink) for central control transmission
SV1	Solenoid Valve Coil〈Bypass Valve〉	TB3, TB4	ConnectionTerminal〈Noise Filter Board〉		
SV2	Solenoid Valve Coil〈Switching Valve〉	U/V/W	Connection Terminal〈U/V/W-Phase〉	LED13	Normal operation(Lit)Error(Blink) for indoor/outdoor transmission
SV3	Solenoid Valve Coil〈Bypass Valve〉	TB1A, TB2A, TB3A TB1B, TB2B, TB3B	Connection Terminal〈Reactor〉		
SV4	Solenoid Valve Coil〈Liquid Shut-off Valve〉			LED14	LED〈Power Supply to Main Microcomputer〉
SV5	Solenoid Valve Coil〈Gas Shut-off Valve〉	IC500	Converter	F1, F2	Fuse〈T6.3AL250V〉
SV6	Solenoid Valve Coil〈Injection〉	IC600	Inverter	X501～X507	Relay
BH	Base Heater	MULTI.C.B.	Multi Controller Circuit Board	CNUSB	USB TYPE A
THP	Thermal Protector<Base Heater>	SW4	Switch〈Display Selection〉	M-NET P.B.	M-NET Power Circuit Board
TH2	Thermistor〈HIC Pipe〉	SW5	Switch〈Model Selection〉	TB1	ConnectionTerminal〈Electrical Parts Box〉
TH3	Thermistor〈Outdoor Liquid Pipe〉				

*1 MODEL SELECTION
The black square(■) indicates a switch position.

MODEL	SW5	MODEL	SW5
MXZ-SM36NLHZ	ON OFF 3 4 5 6	MXZ-SM48NLHZ	ON OFF 3 4 5 6
MXZ-SM42NLHZ	ON OFF 3 4 5 6	MXZ-SM60NLHZ	ON OFF 3 4 5 6

*2 Use copper supply wires.
Utiliser des fils d'alimentation en cuivre.

MXZ-SM72, 96, 120TL-U1

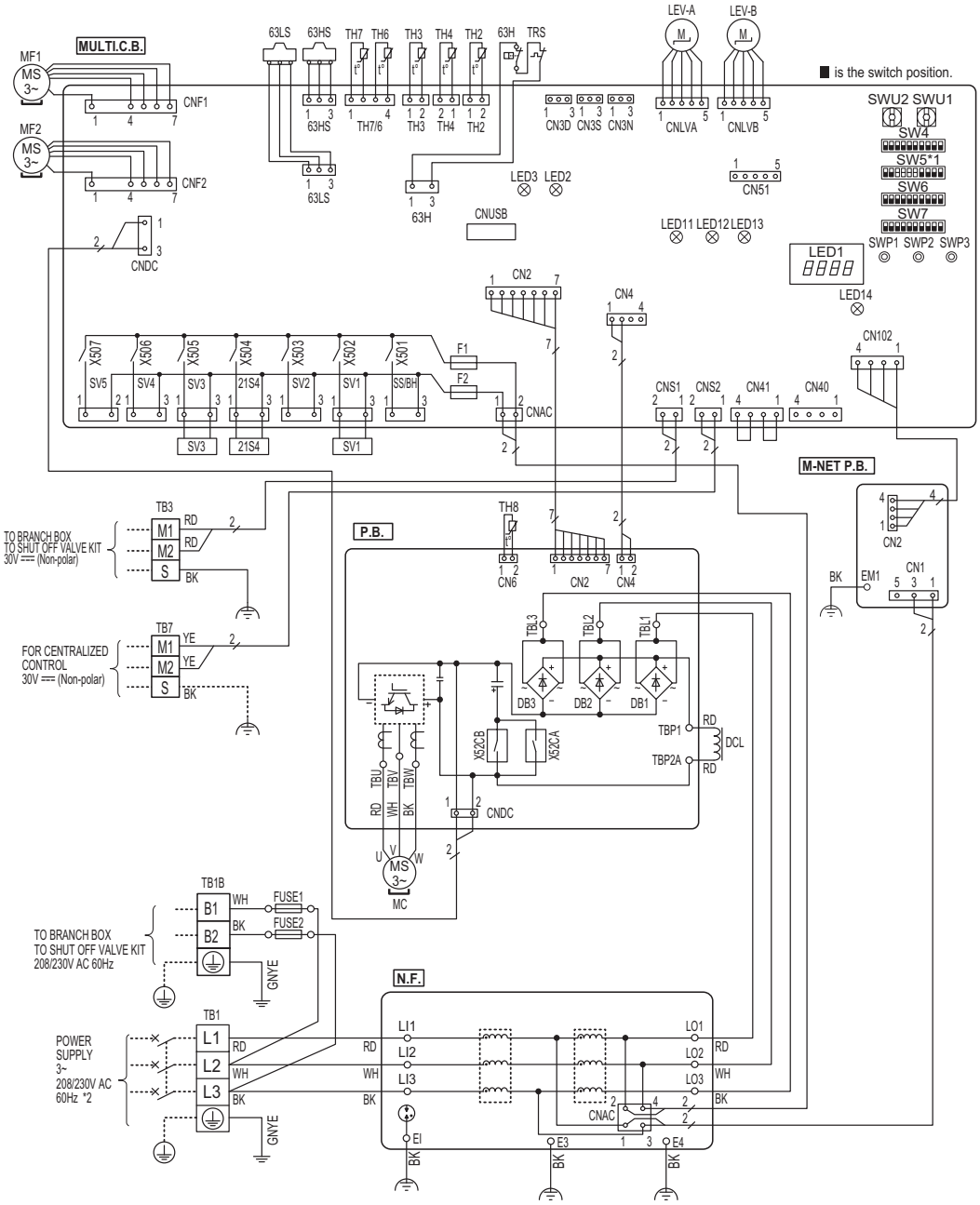

*1 MODEL SELECT
The black square (■) indicates a switch position.
*2 Use copper supply wires.
Utiliser des fils d'alimentation en cuivre.

MODEL	SW5	MODEL	SW5	MODEL	SW5
MXZ-SM72TL	ON OFF 3 4 5 6	MXZ-SM96TL	ON OFF 3 4 5 6	MXZ-SM120TL	ON OFF 3 4 5 6

【LEGEND】

SYMBOL	NAME	SYMBOL	NAME	SYMBOL	NAME
TB1	Terminal Block <Power Supply>	TRS	Compressor Protecter	SWP3	Switch <Function Selection>
TB1B	Terminal Block <Branch Box>	LEV-A, LEV-B	Linear Expansion Valve	SS/BH	Connector <Connection for Option>
TB3	Terminal Block <Indoor/Outdoor, Branch Box/Outdoor>	DCL	Reactor	CN3D	Connector <Connection for Option>
TB7	Terminal Block <Centralized Control Transmission Line>	P.B.	Power Circuit Board	CN3S	Connector <Connection for Option>
FUSE1, FUSE2	Fuse <T20AL250V>	TBL1,TBL2,TBL3	Connection Terminal <L1/L2/L3-Power Supply>	CN3N	Connector <Connection for Option>
MC	Motor for Compressor	TBP1,TBP2A	Connection Terminal <Reactor>	CN51	Connector <Connection for Option>
MF1, MF2	Fan Motor	TBU,TBV,TBW	Connection Terminal <U/V/W-Phase>	LED1	LED <Operation Inspection Display>
63H	High Pressure Switch	N.F	Noise Filter Circuit Board	LED11	Normal operation(Lit)/IC Error(Blink)
63HS	High Pressure Sensor	LI1, LI2, LI3	Connection Terminal <L1/L2/L3-Power Supply>	LED12	Normal operation(Lit)Error(Blink) for central control transmission
63LS	Low Pressure Sensor	LO1, LO2, LO3	Connection Terminal <L1/L2/L3-Power Supply>		
SV1	Solenoid Valve Coil <Bypass Valve>	EI, E3, E4	Connection Terminal <Electrical Parts Box>	LED13	Normal operation(Lit)Error(Blink) for indoor/outdoor transmission
SV3	Solenoid Valve Coil <Oil return Valve>	MULTI.C.B.	Multi Controller Circuit Board		
21S4	Solenoid Valve Coil <4-Way Valve>	SW4	Switch <Display Selection>	LED14	LED<Power Supply to Main Microcomputer>
TH2	Thermistor <HIC Pipe>	SW5	Switch <Model Selection>	F1, F2	Fuse <T6.3AL250V>
TH3	Thermistor <Outdoor Liquid Pipe>	SW6	Switch <Function Selection/Test Run>	X501~X507	Relay
TH4	Thermistor <Compressor>	SW7	Switch <Function Selection>	CNUSB	USB TYPE A
TH6	Thermistor <Suction Pipe>	SWU1	Switch <Unit Address Selection, ones digit>	M-NET P.B.	M-NET Power Circuit Board
TH7	Thermistor <Ambient>	SWU2	Switch <Unit Address Selection, tens digit>	EM1	ConnectionTerminal<Electrical Parts Box>
TH8	Thermistor <Heat Sink>	SWP2	Switch <Display Selection>		

Measurement condition
MXZ-SM36, 48, 60NL-U1
MXZ-SM36, 42, 48, 60NLHZ-U1

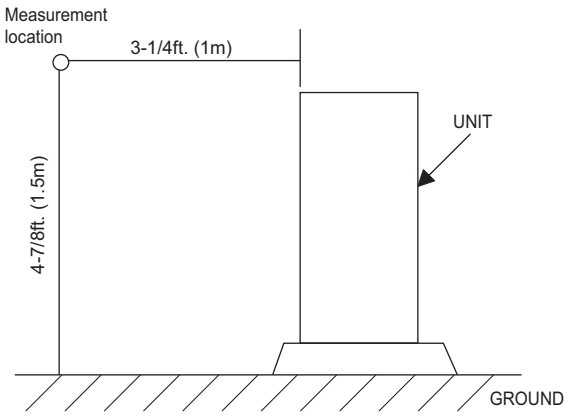

Sound level of MXZ-SM60NL-U1, MXZ-SM60NLHZ-U1

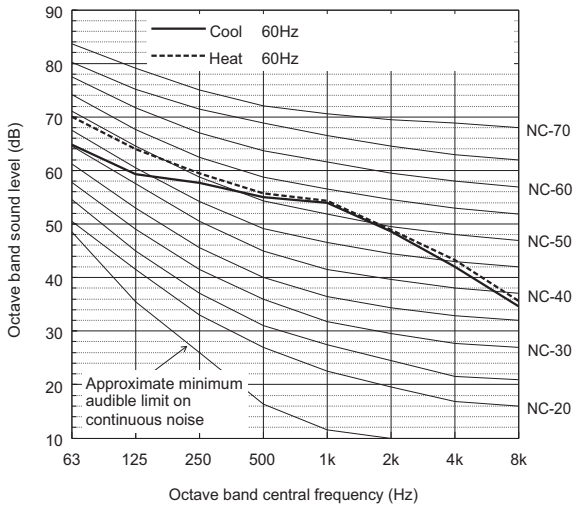

		63	125	250	500	1k	2k	4k	8k	dB(A)
Standard Cooling	60Hz	64.9	59.4	57.7	55.1	54.0	48.7	42.1	34.7	58.0
Standard Heating	60Hz	70.1	64.0	59.5	55.8	54.4	49.0	43.3	35.7	59.0

Sound level of MXZ-SM36NL-U1, MXZ-SM36NLHZ-U1

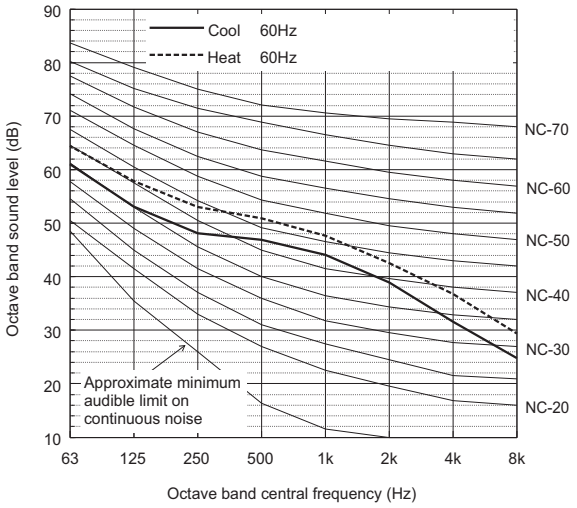

		63	125	250	500	1k	2k	4k	8k	dB(A)
Standard Cooling	60Hz	61.1	53.1	48.2	46.9	44.1	39.0	31.6	24.9	49.0
Standard Heating	60Hz	64.5	57.9	53.1	51.0	47.7	42.6	36.8	29.4	53.0

Sound level of MXZ-SM42NLHZ-U1

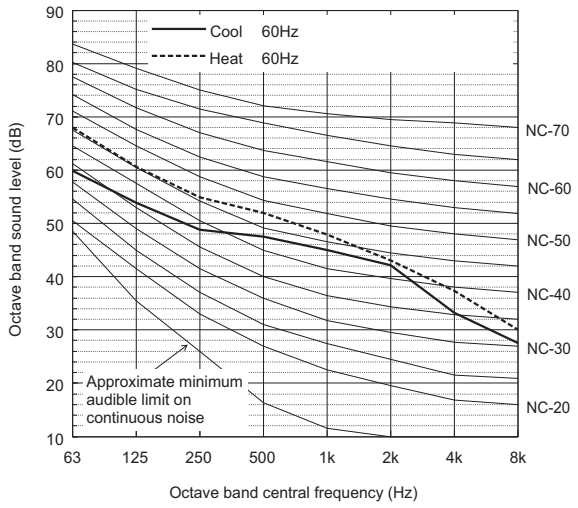

		63	125	250	500	1k	2k	4k	8k	dB(A)
Standard Cooling	60Hz	59.7	53.8	48.7	47.4	44.9	42.1	33.2	27.5	50.0
Standard Heating	60Hz	67.8	60.5	54.8	51.9	47.8	43.0	37.3	30.0	54.0

Sound level of MXZ-SM48NL-U1, MXZ-SM48NLHZ-U1

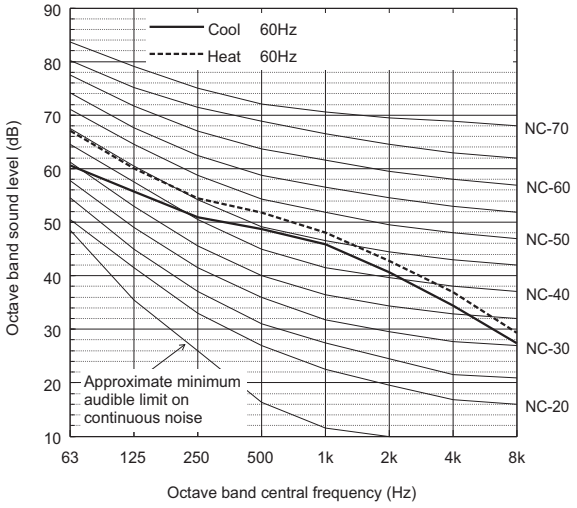

		63	125	250	500	1k	2k	4k	8k	dB(A)
Standard Cooling	60Hz	60.7	55.9	51.0	48.8	46.0	40.7	34.5	27.5	51.0
Standard Heating	60Hz	67.3	60.2	54.6	51.9	48.2	42.9	37.1	29.4	54.0

Measurement condition
MXZ-SM72, 96, 120TL-U1

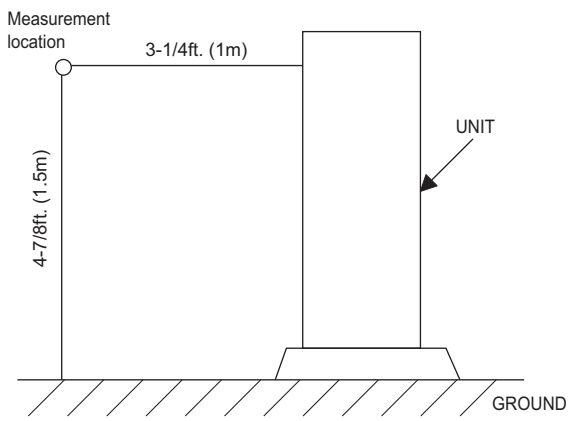

Sound level of MXZ-SM120TL-U1

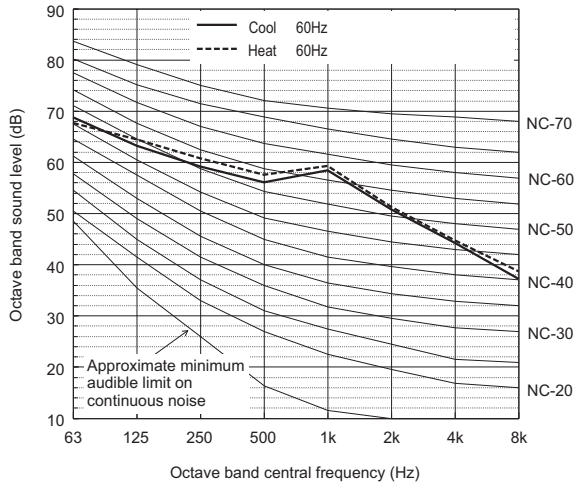

		63	125	250	500	1k	2k	4k	8k	dB(A)
Standard Cooling	60Hz	68.7	63.3	59.2	56.1	58.4	50.9	44.3	37.3	61.0
Standard Heating	60Hz	67.6	64.5	60.8	57.6	59.3	51.3	44.8	38.7	62.0

Sound level of MXZ-SM72TL-U1

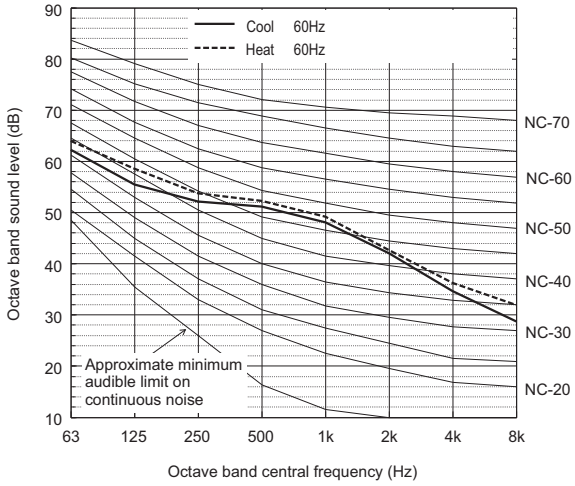

		63	125	250	500	1k	2k	4k	8k	dB(A)
Standard Cooling	60Hz	62.3	55.5	52.1	51.2	48.1	42.0	34.7	28.7	53.0
Standard Heating	60Hz	64.0	58.6	53.7	52.3	49.2	42.7	36.3	31.9	54.0

Sound level of MXZ-SM96TL-U1

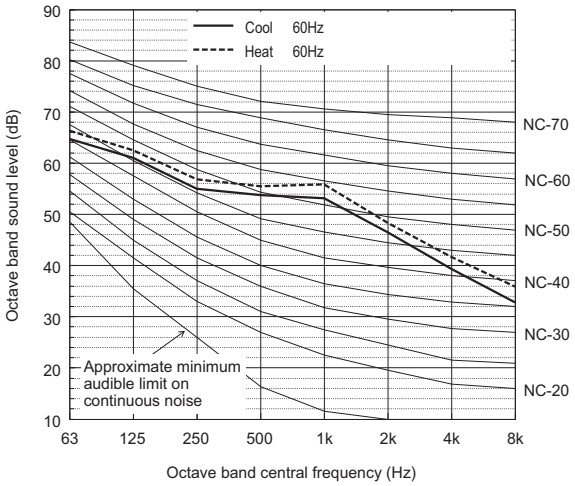

		63	125	250	500	1k	2k	4k	8k	dB(A)
Standard Cooling	60Hz	64.7	61.1	55.0	53.7	53.1	46.5	39.4	32.8	58.0
Standard Heating	60Hz	66.3	62.6	56.8	55.5	55.9	48.3	41.6	35.8	59.0

• **Cooling**

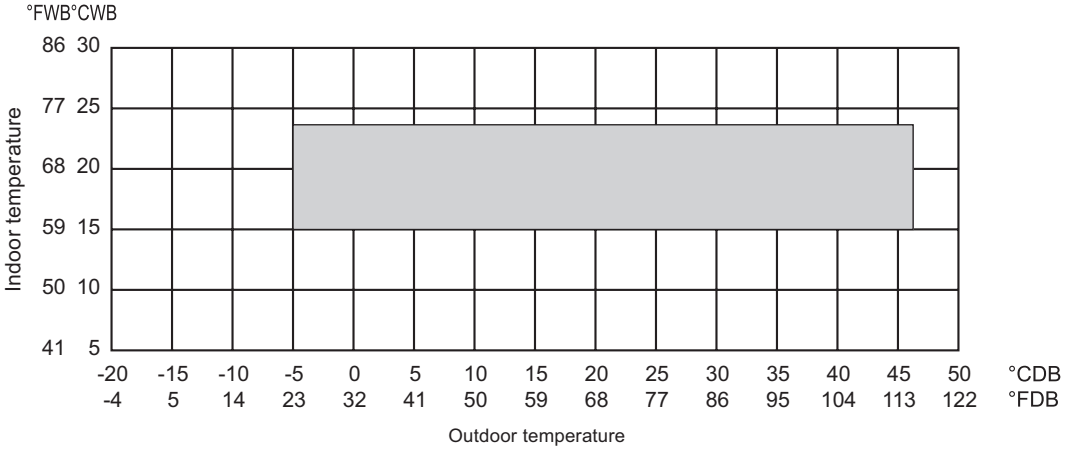

*50 to 115 ºF [10 to 46 ºC] D.B.: When connecting PKFY-L04/06/08/12NLMU type indoor unit. (MXZ-SM*NL/NLHZ/TL)
When connecting PLFY-L/M05/08/12/15/18NFMU, PEFY-L/M06NMSU
and PEFY-L/M06NMAU type indoor unit. (MXZ-SM*TL)

*5 to 115 °F [-15 to 46 ºC] D.B.: When using an optional front wind baffle.
However, this condition does not apply to the indoor units listed in the above note.

• **Heating**

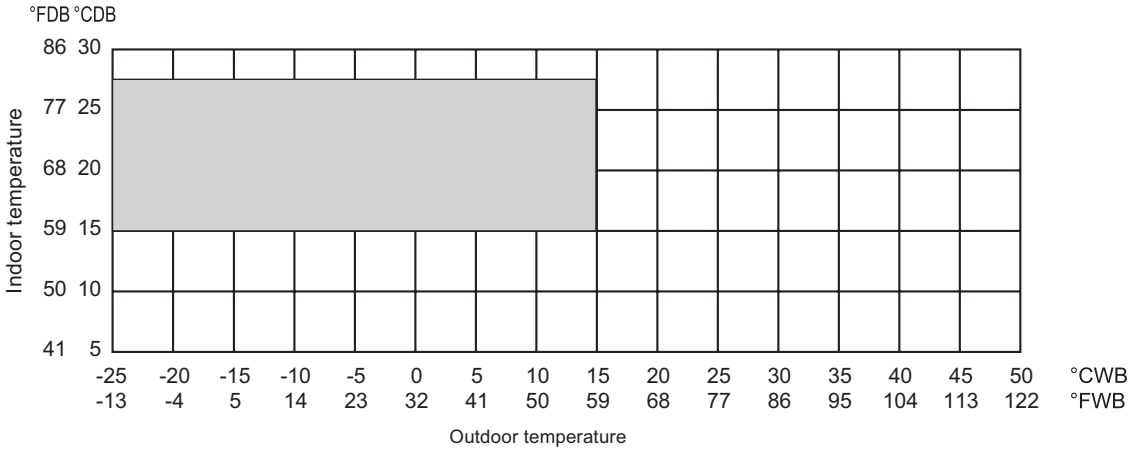

9-1. Selection of indoor and outdoor units

MXZ-SM36, 48, 60NL
MXZ-SM36, 42, 48, 60NLHZ

■ How to determine the capacity when less than or equal to 100% indoor model size units are connected in total:

The purpose of this flow chart is to select the indoor and outdoor units. For other purposes, this flow chart is intended only for reference.

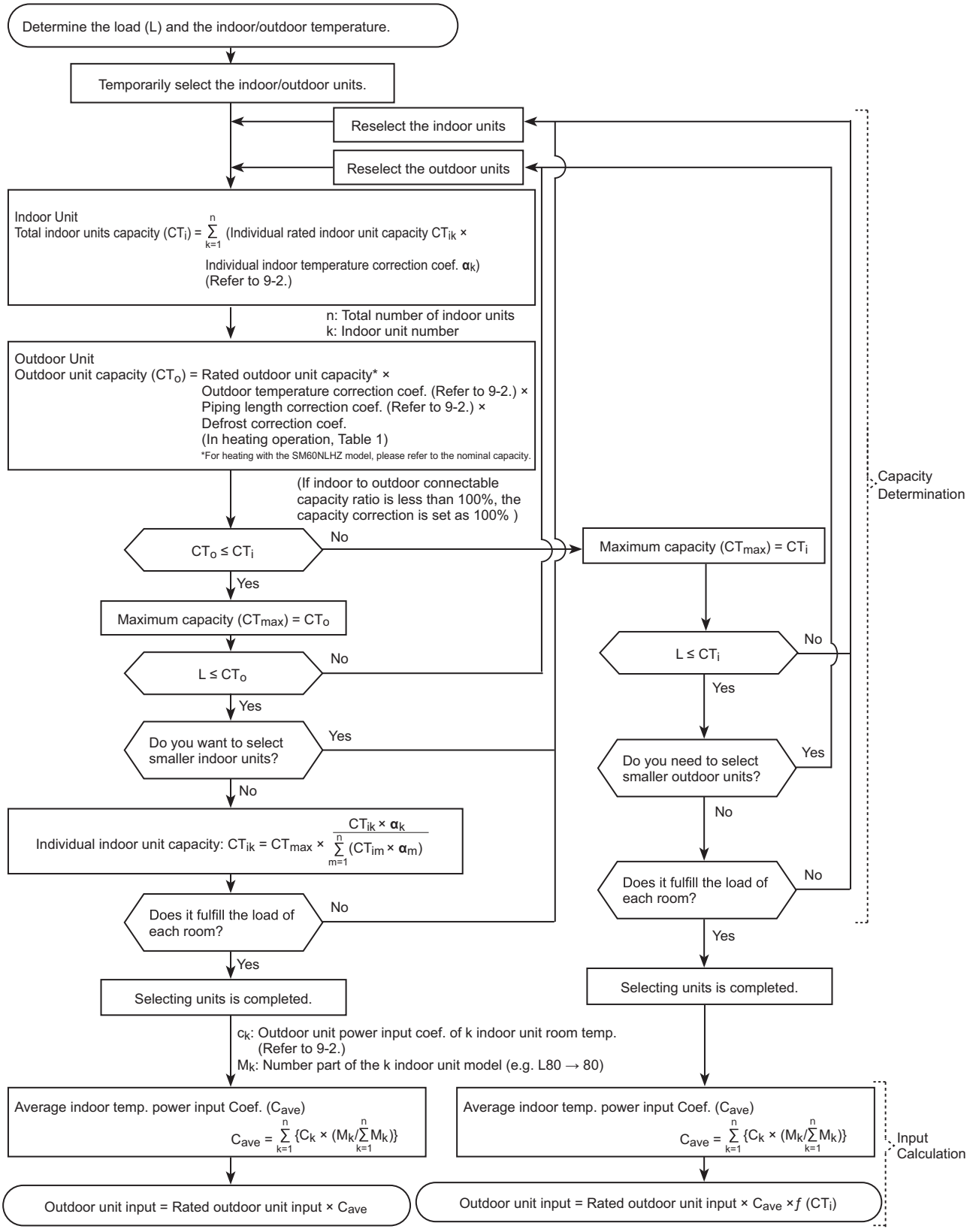

■ How to determine the capacity when greater than 100% indoor model size units are connected in total

The purpose of this flow chart is to select the indoor and outdoor units. For other purposes, this flow chart is intended only for reference.

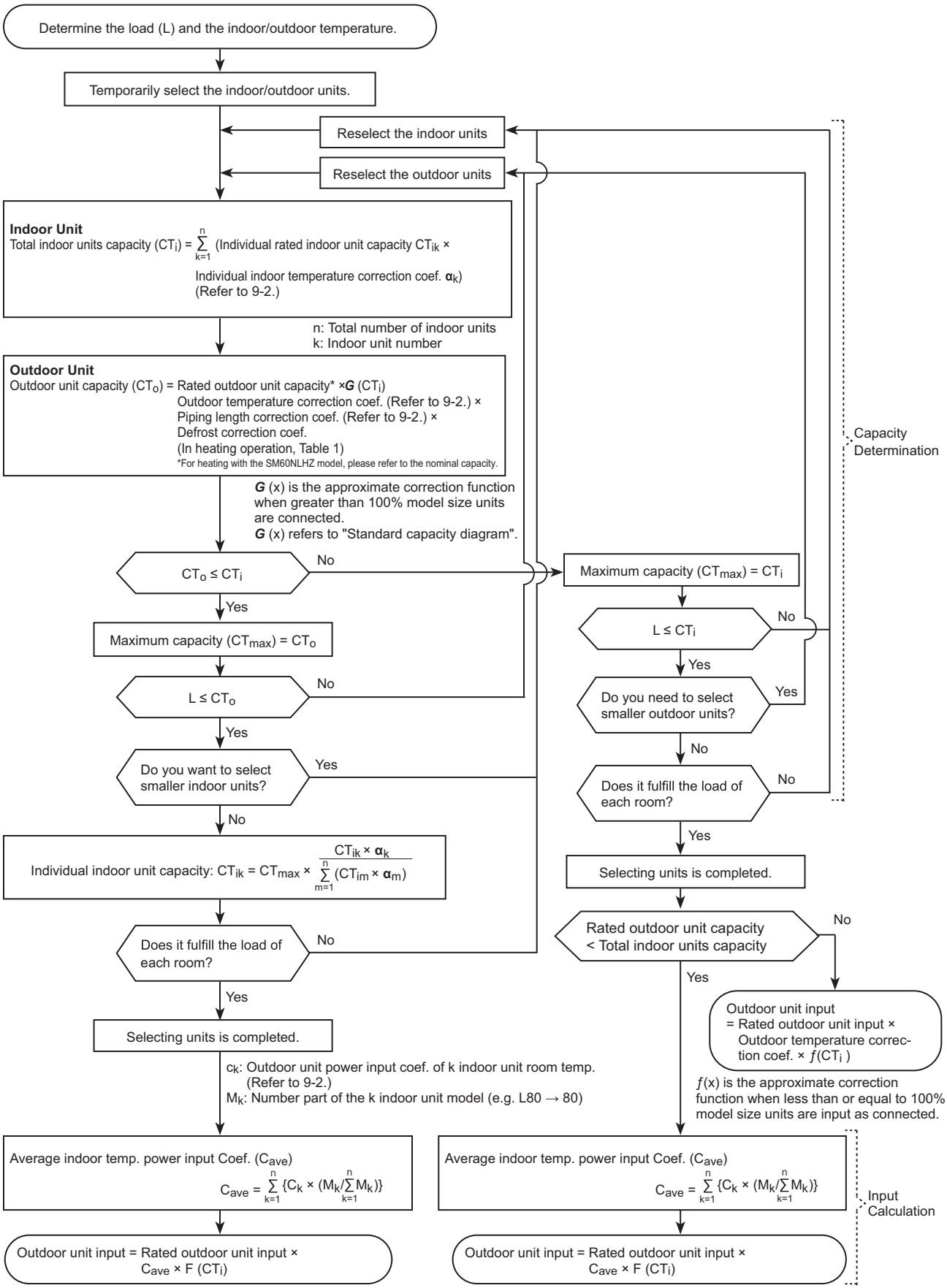

F (x) is the approximate correction function when greater than 100% model size units are input as connected.

<Cooling>

Design condition		
Outdoor dry bulb temperature		98.6ºF (37.0ºC)
Total cooling load		30.3 kBtu/h
Room 1	Indoor dry bulb temperature	80.6ºF (27.0ºC)
	Indoor wet bulb temperature	68.0ºF (20.0ºC)
	Cooling load	13.6 kBtu/h
Room 2	Indoor dry bulb temperature	75.2ºF (24.0ºC)
	Indoor wet bulb temperature	66.2ºF (19.0ºC)
	Cooling load	16.7 kBtu/h
Other	Indoor/Outdoor piping equivalent length	250 ft

Capacity of indoor unit

- CITY MULTI series

Model class of indoor unit	04	05	06	08	12	15	18	24	27	30	36	48	54	72
Model capacity (kBtu/h)	4.0	5.0	6.0	8.0	12.0	15.0	18.0	24.0	27.0	30.0	36.0	48.0	54.0	72.0

- M, S, P series

Model name	Capacity class							
	06	09	12	15	18	24	30	36
SVZ-AP	-	-	11.4	-	18.0	22.8	27.0	33.0
SLZ-AF	-	9.0	12.0	14.1	-	-	-	-
SEZ-AD	-	8.9	12.0	15.0	18.0	-	-	-
MFZ-KX	-	9.0	12.0	15.0	18.0	-	-	-
MLZ-KX	6.0	9.0	11.3	-	16.4	-	-	-
MSZ-FX	6.0	9.0	12.0	15.0	17.2	-	-	-
MSZ-GX	6.0	9.0	12.0	14.0	18.0	22.4	-	-
PEAD-AA	-	9.0	12.0	15.0	18.0	21.2	27.0	36.0
PLA-AE	-	-	12.0	-	18.0	24.0	30.0	36.0
PAA	-	-	-	-	18.0	23.6	31.0	32.0

9-1-1. Cooling calculation

- Tentative selection of indoor units
  Room1: PEFY-L15 15.0 kBtu/h (Rated)
  Room2: PEFY-L18 18.0 kBtu/h (Rated)
  In this case, the total capacity is 33.0. (15.0 + 18.0 = 33.0)
- Tentative selection of outdoor unit
  Proper outdoor unit in this case is SM36NL as the total capacity of the indoor units is 33.0.
  SM36NL 36.0 kBtu/h (Rated)
- Calculation for the corrected capacity of the total indoor units (CTi)
  Correction factor for indoor design wet bulb temperature: Room 1 (68.0°F) 1.02 (Refer to 9-2.)
  Room 2 (66.2°F) 0.95 (Refer to 9-2.)
  CTi = Σ (Rated capacity of indoor unit × Correction factor for indoor temperature)
  = 15.0 × 1.02 + 18.0 × 0.95
  = 32.4 kBtu/h
- Calculation for the corrected capacity of the outdoor unit (CTo)
  Correction factor for outdoor temperature (98.6°F) 0.98 (Refer to 9-2.)
  Correction factor for piping length (250 ft) 0.93 (Refer to 9-4.)
  CTo = Rated capacity of outdoor unit × Correction factor for outdoor temperature × Correction factor for piping length × G(CTi)*1
  = 36.0 × 0.98 × 0.93
  = 32.8 kBtu/h

*1. G(CTi) is used only when greater than 100% indoor model size are connected in total. Refer to Standard capacity diagram.

- Determination of maximum system capacity (CTx)
  Comparison between CTi and CTo:
  CTi = 32.4 < CTo = 32.8, thus, select CTi.
  CTx = CTi = 32.4 kBtu/h

- Comparison with essential load
  Against the essential load 30.3 kW, the maximum system capacity is 32.4 kW: A proper outdoor unit is selected.
- Calculation for the maximum indoor unit capacity of each room
  When CTx = CTi, use the calculation formula below.
  Room1: Rated capacity of indoor unit × Correction factor for indoor design temperature
  = 15.0 × 1.02
  = 15.3 kBtu/h
  The capacity is enough for the cooling load of Room 1 (13.6 kBtu/h): A proper indoor unit is selected.
  Room2: CTx × Indoor unit rating × Correction factor for indoor design temperature
  = 18.0 × 0.95
  = 17.1 kBtu/h
  The capacity is enough for the cooling load of Room 2 (16.7 kBtu/h): A proper indoor unit is selected.

Note:
- Go on to the selection of units for heating after the selection for cooling has successfully completed. If failed, try again until proper units are selected.

<Heating>

Design condition		
Outdoor wet bulb temperature		35.6ºF (2.0ºC)
Total heating load		32.3 kBtu/h
Room 1	Indoor dry bulb temperature	69.8ºF (21.0ºC)
	Heating load	15.5 kBtu/h
Room 2	Indoor dry bulb temperature	73.4ºF (23.0ºC)
	Heating load	16.8 kBtu/h
Other	Indoor/Outdoor piping equivalent length	328 ft

Capacity of indoor unit

- CITY MULTI series

Model class of indoor unit	04	05	06	08	12	15	18	24	27	30	36	48	54
Model capacity (kBtu/h)	4.5	5.6	6.7	9.0	13.5	17.0	20.0	27.0	30.0	34.0	40.0	54.0	60.0

- M, S, P series

Model name	Capacity class							
	06	09	12	15	18	24	30	36
SVZ-AP	-	-	15.0	-	20.0	25.0	30.0	34.2
SLZ-AF	-	11.0	13.0	18.0	-	-	-	-
SEZ-AD	-	12.0	15.0	18.0	20.0	-	-	-
MFZ-KX	-	12.0	15.0	18.0	20.0	-	-	-
MLZ-KX	7.2	12.0	14.6	-	19.0	-	-	-
MSZ-FX	9.0	12.0	13.2	16.5	17.0	-	-	-
MSZ-GX	7.2	10.9	14.4	18.0	21.6	27.6	-	-
PEAD-AA	-	12.0	14.0	18.0	19.0	26.0	30.8	38.0
PLA-AE	-	-	14.0	-	19.0	26.0	32.0	38.0
PAA	-	-	-	-	19.0	26.0	32.0	38.0

9-1-2. Heating calculation

- Tentative selection of indoor units
  Room1: PEFY-L15 17.0 kBtu/h (Nominal)
  Room2: PEFY-L18 20.0 kBtu/h (Nominal)
  In this case, the total capacity is 33.0. (15.0 + 18.0 = 33.0)
- Tentative selection of outdoor unit
  Proper outdoor unit in this case is SM36NL as the total capacity of the indoor units is 33.0.
  SM36NL 41.0 kBtu/h
- Calculation for the corrected capacity of the total indoor units (CTi)
  Correction factor for indoor temperature: Room 1 (69.8°F) 1.00 (Refer to 9-2.)
  Room 2 (73.4°F) 0.92 (Refer to 9-2.)
  CTi = Σ (Rated capacity of indoor unit × Correction factor for indoor temperature)
  = 17.0 × 1.00 + 20.0 × 0.92
  = 35.4 kW
- Calculation for the corrected capacity of the outdoor unit (CTo)
  Correction factor for outdoor temperature (35.6°F WB) 1.00 (Refer to 9-2.)
  Correction factor for piping length (328 ft) 0.94 (Refer to 9-4.)
  Correction factor for defrosting 0.85 (Refer to Table 1.)
  CTo = Rated capacity of outdoor unit × Correction factor for outdoor temperature × Correction factor for piping length × Correction factor for defrosting (× G(CTi))*1
  = 41.0 × 1.00 × 0.94 × 0.85
  = 32.7 kBtu/h

*1. G(CTi) is used only when greater than 100% indoor model size are connected in total. Refer to Standard capacity diagram.

Table 1 Table of correction factor for frosting and defrosting

Outdoor inlet air temp. [°F (°C) W.B.]	43(6)	37(4)	36(2)	32(0)	28(-2)	25(-4)	21(-6)	18(-8)	14(-10)	5(-15)	-4(-20)	-13(-25)
Correction factor	1.00	0.94	0.85	0.84	0.85	0.86	0.95	0.95	0.95	0.95	0.95	0.95

- Determination of maximum system capacity (CTx)
  Comparison between CTi and CTo:
  CTi = 35.4 > CTo = 32.7, thus, select CTo.
  CTx = CTo = 32.7 kBtu/h
- Comparison with essential load
  Against the essential load 32.3 kBtu/h, the maximum system capacity is 32.7 kBtu/h: Proper indoor units have been selected.
- Calculation for the maximum indoor unit capacity of each room
  When CTx = CTo, use the calculation formula below.
  Room1: CTx × Corrected capacity for Room1/CTi
  = 32.7 × (17.0 × 1.00)/35.4
  = 15.7 kBtu/h
  The capacity is enough for the heating load of Room 1 (15.5 kW): A proper indoor unit is selected.
  Room2: CTx × Corrected capacity for Room1/CTi
  = 32.7 × (20.0 × 0.92)/(35.4)
  = 17.0 kW
  The capacity is enough for the heating load of Room 2 (16.8 kW): A proper indoor unit is selected.

Note:
- The selection of units is completed when proper units are selected.

9-1-3. Power input of outdoor unit

- Outdoor unit: MXZ-SM36NL
- Indoor unit 1: PEFY-L15
  Indoor unit 2: PEFY-L18

■ Cooling

- Nominal power input of outdoor unit 2.56 kW
- Calculation of the average indoor temperature power input coefficient
  - Coefficient of the outdoor unit for indoor unit 1
    (Outdoor temp. 98.6°F [37.0°C] D.B., Indoor temp. 68.0°F [20.0°C] W.B.)
    1.04 (Refer to 9-2.)
  - Coefficient of the outdoor unit for indoor unit 2
    (Outdoor temp. 98.6°F [37.0°C] D.B., Indoor temp. 64.4°F [18.0°C] W.B.)
    0.85 (Refer to 9-2.)
  - Average indoor temp. power input coefficient (Cave) = $\sum_{k=1}^{n}\{Ck \times (Mk/\sum_{k=1}^{n}Mk)\}$
    - n: Total number of the indoor units
    - k: Number of the indoor unit
    - ck: Outdoor unit power input coefficient of k indoor unit room temp.
    - Mk: Number part of the k indoor unit model (e.g. P80: 80)
  - Correction Coefficient of Indoor temperature = 1.04 × 15/(15 +18) + 0.85 × 18/(15 + 18)
    = 0.94
- Coefficient of the partial load f(CTi)
  Total indoor units capacity = 15 + 18 = 33, thus, f(CTi) = 0.9 (Refer to the tables in 5-4. “Standard Capacity Diagram”.)
- Outdoor power input (PIo)
  Maximum System Capacity (CTx) = Total outdoor unit capacity (CTo), so use the following formula:
  PIo = Outdoor unit cooling nominal power input × Correction coefficient of indoor temperature × f(CTi)
  = 2.56 × 0.94 × 0.9
  = 2.17 kW

■ Heating

- Nominal power input of outdoor unit 3.01 kW
- Calculation of the average indoor temperature power input coefficient
  - Coefficient of the outdoor unit for indoor unit 1 (Outdoor temp. 26.6°F [-3°C] W.B., Indoor temp. 70°F [21.1°C] D.B.)
    1.16 (Refer to 9-2.)
  - Coefficient of the outdoor unit for indoor unit 2 (Outdoor temp. 26.6°F [-3°C] W.B., Indoor temp. 78.8°F [26.0°C] D.B.)
    1.09 (Refer to 9-2.)
  - Average indoor temp. power input coefficient (Cave) = $\sum_{k=1}^{n}\{Ck \times (Mk/\sum_{k=1}^{n}Mk)\}$
    - n: Total number of the indoor units
    - k: Number of the indoor unit
    - ck: Outdoor unit power input coefficient of k indoor unit room temp.
    - Mk: Number part of the k indoor unit model (e.g. P80: 80)
  - Correction Coefficient of Indoor temperature = 1.16 × 15/(15 + 18) + 1.09 × 18/(15 + 18)
    = 1.12
- Coefficient of the partial load f(CTi)
  Total indoor units capacity = 15 +18 = 33, thus, f(CTi) = 0.9 (Refer to the tables in 5-4. “Standard capacity diagram”.)
- Outdoor power input (PIo)
  Maximum System Capacity (CTx) = Total Indoor unit capacity (CTi), so use the following formula
  PIo = Outdoor unit heating nominal power input × Correction coefficient of indoor temperature × f(CTi)
  = 3.01 × 1.12 × 0.9
  = 3.03 kW

MXZ-SM72, 96, 120TL

■ How to determine the capacity when less than or equal to 100% indoor model size units are connected in total:

The purpose of this flow chart is to select the indoor and outdoor units. For other purposes, this flow chart is intended only for reference.

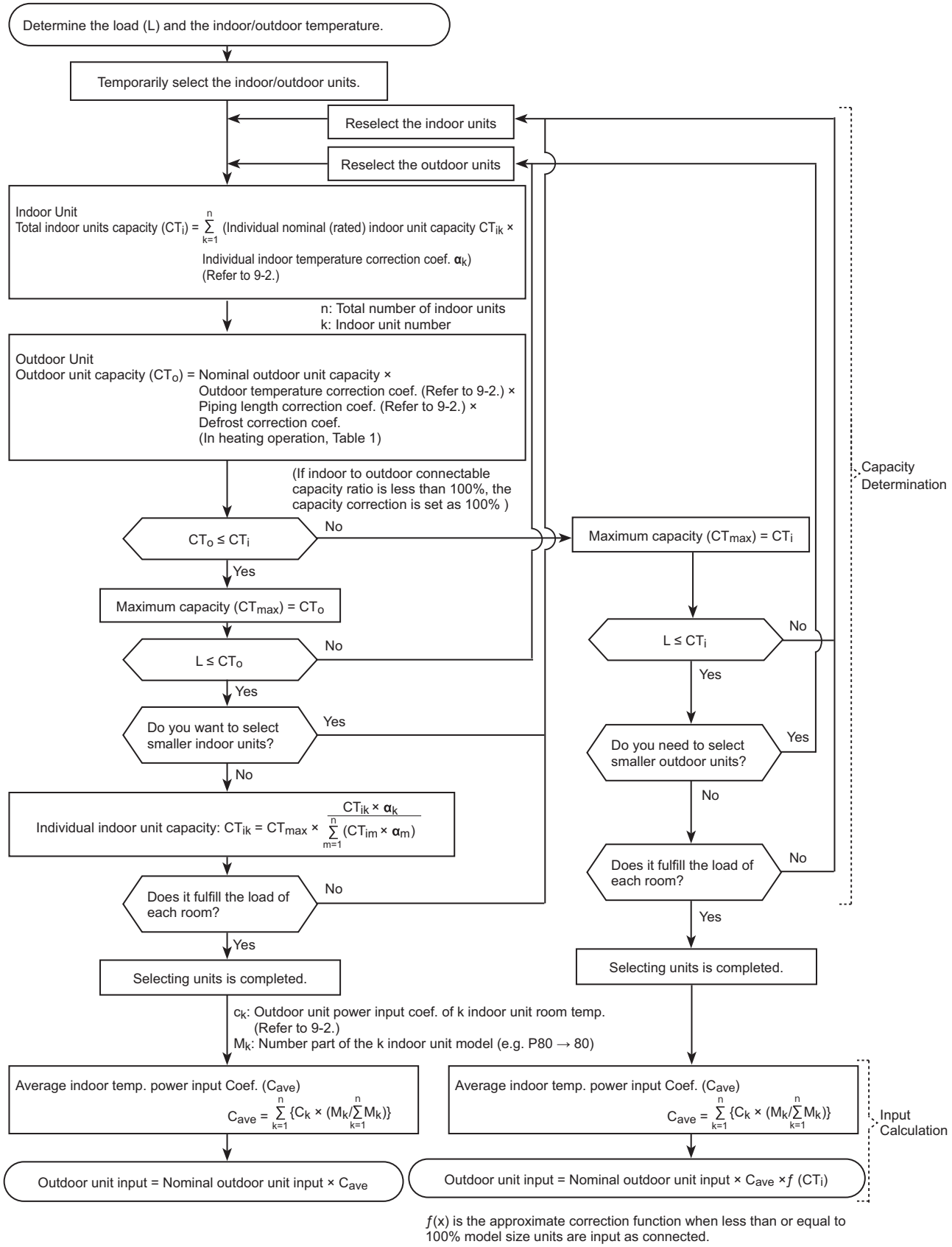

f(x) is the approximate correction function when less than or equal to 100% model size units are input as connected.

■ How to determine the capacity when greater than 100% indoor model size units are connected in total

The purpose of this flow chart is to select the indoor and outdoor units. For other purposes, this flow chart is intended only for reference.

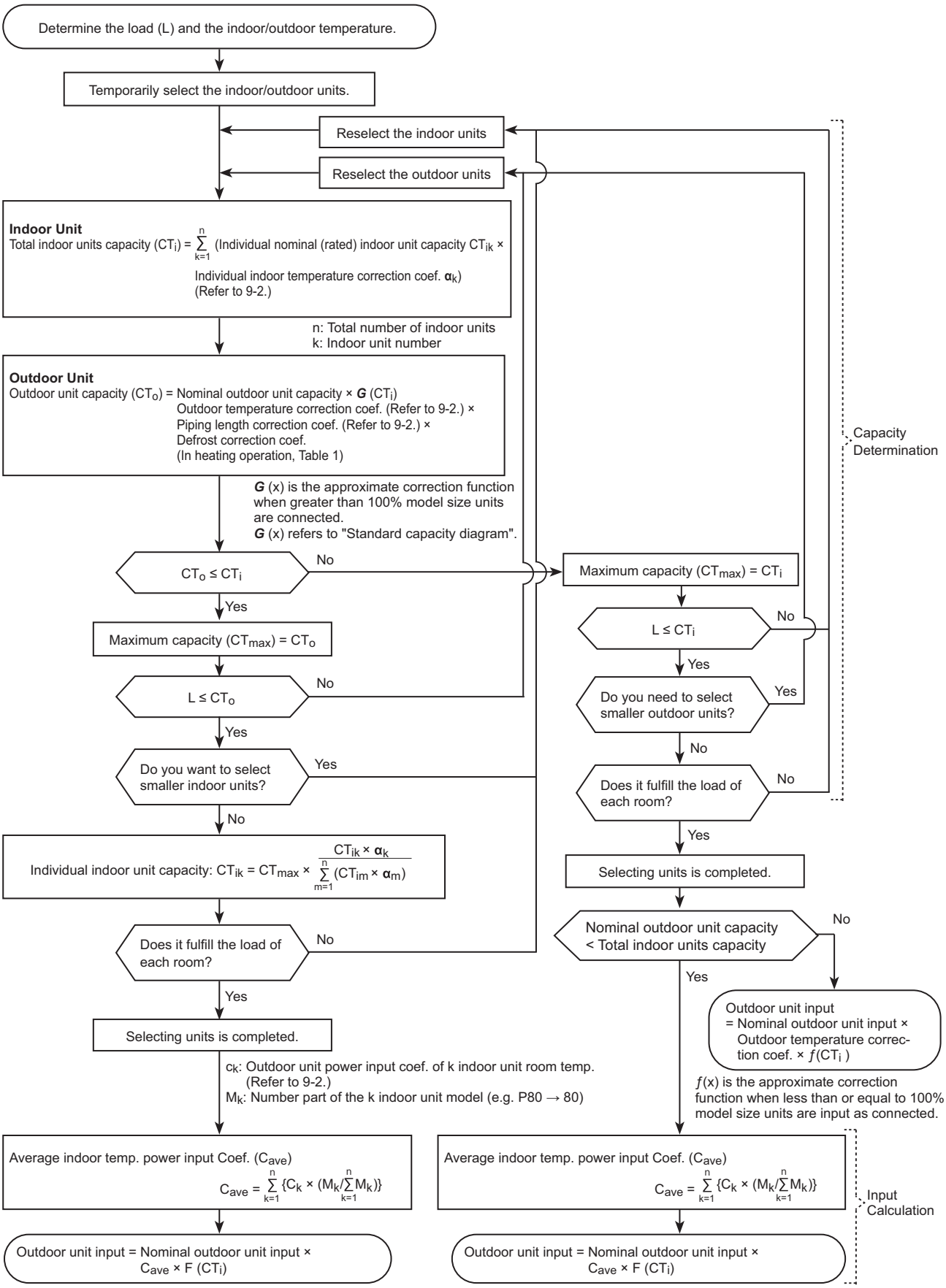

F (x) is the approximate correction function when greater than 100% model size units are input as connected.

<Cooling>

Design condition		
Outdoor dry bulb temperature		98.6ºF (37.0ºC)
Total cooling load		60.6 kBtu/h
Room 1	Indoor dry bulb temperature	80.6ºF (27.0ºC)
	Indoor wet bulb temperature	68.0ºF (20.0ºC)
	Cooling load	27.2 kBtu/h
Room 2	Indoor dry bulb temperature	75.2ºF (24.0ºC)
	Indoor wet bulb temperature	66.2ºF (19.0ºC)
	Cooling load	33.4 kBtu/h
Other	Indoor/Outdoor piping equivalent length	196 ft

Capacity of indoor unit

- CITY MULTI series

Model name	04	05	06	08	12	15	18	24	27	30	36	48	54	60	72	96
Model capacity (kBtu/h)	4.0	5.0	6.0	8.0	12.0	15.0	18.0	24.0	27.0	30.0	36.0	48.0	54.0	60.0	72.0	96.0

- M, S, P series

Model name	Capacity class							
	06	09	12	15	18	24	30	36
SVZ-AP	-	-	11.4	-	18.0	22.8	27.0	33.0
SLZ-AF	-	9.0	12.0	14.1	-	-	-	-
SEZ-AD	-	8.9	12.0	15.0	18.0	-	-	-
MFZ-KX	-	9.0	12.0	15.0	18.0	-	-	-
MLZ-KX	-	9.0	11.3	-	16.4	-	-	-
MSZ-FX	6.0	9.0	12.0	15.0	17.2	-	-	-
MSZ-GX	6.0	9.0	12.0	14.0	18.0	22.4	-	-
PEAD-AA	-	9.0	12.0	15.0	18.0	21.2	27.0	36.0
PLA-AE	-	-	12.0	-	18.0	24.0	30.0	36.0

9-1-4. Cooling calculation

- Tentative selection of indoor units
  Room1: PEFY-L/M30 30.0 kBtu/h (Nominal)
  Room2: PEFY-L/M36 36.0 kBtu/h (Nominal)
  In this case, the total capacity is 66.0. (30.0 + 36.0 = 66.0)
- Tentative selection of outdoor unit
  Proper outdoor unit in this case is SM72TL as the total capacity of the indoor units is 66.0.
  SM72TL 72.0 kBtu/h (Nominal)
- Calculation for the corrected capacity of the total indoor units (CTi)
  Correction factor for indoor design wet bulb temperature: Room 1 (68.0°F) 1.02 (Refer to 9-2.)
  Room 2 (66.2°F) 0.95 (Refer to 9-2.)
  CTi = Σ (Rated capacity of indoor unit × Correction factor for indoor temperature)
  = 30.0 × 1.02 + 36.0 × 0.95
  = 64.8 kBtu/h
- Calculation for the corrected capacity of the outdoor unit (CTo)
  Correction factor for outdoor temperature (95.0°F) 1.00 (Refer to 9-2.)
  Correction factor for piping length (196 ft) 0.93 (Refer to 9-4.)
  CTo = Rated capacity of outdoor unit × Correction factor for outdoor temperature × Correction factor for piping length × G(CTi)*1
  = 72.0 × 1.00 × 0.93
  = 66.96 kBtu/h

*1. G(CTi) is used only when greater than 100% indoor model size are connected in total. Refer to Standard capacity diagram.

- Determination of maximum system capacity (CTx)
  Comparison between CTi and CTo:
  CTi = 64.8 < CTo = 66.96, thus, select CTi.
  CTx = CTi = 64.8 kBtu/h
- Comparison with essential load
  Against the essential load 60.6 kW, the maximum system capacity is 64.8 kW: A proper outdoor unit is selected.
- Calculation for the maximum indoor unit capacity of each room
  When CTx = CTi, use the calculation formula below.
  Room1: Rated capacity of indoor unit × Correction factor for indoor design temperature
  = 30.0 × 1.02
  = 30.6 kBtu/h
  The capacity is enough for the cooling load of Room 1 (27.2 kBtu/h): A proper indoor unit is selected.
  Room2: CTx × Indoor unit rating × Correction factor for indoor design temperature
  = 36.0 × 0.95

= 34.2 kBtu/h
The capacity is enough for the cooling load of Room 2 (33.4 kBtu/h): A proper indoor unit is selected.

Note:
- Go on to the selection of units for heating after the selection for cooling has successfully completed. If failed, try again until proper units are selected.

<Heating>

Design condition		
Outdoor wet bulb temperature		35.6ºF (2.0ºC)
Total heating load		67.5 kBtu/h
Room 1	Indoor dry bulb temperature	69.8ºF (21.0ºC)
	Heating load	32.2 kBtu/h
Room 2	Indoor dry bulb temperature	73.4ºF (23.0ºC)
	Heating load	35.3 kBtu/h
Other	Indoor/Outdoor piping equivalent length	196 ft

Capacity of indoor unit
- CITY MULTI series

Model class of indoor unit	04	05	06	08	12	15	18	24	27	30	36	48	54	60	72	96
Model capacity (kBtu/h)	4.5	5.6	6.7	9.0	13.5	17.0	20.0	27.0	30.0	34.0	40.0	54.0	60.0	59.5	80.0	108.0

- M, S, P series

Model name	Capacity class							
	06	09	12	15	18	24	30	36
SVZ-AP	-	-	15.0	-	20.0	25.0	30.0	34.2
SLZ-AF	-	11.0	13.0	18.0	-	-	-	-
SEZ-AD	-	12.0	15.0	18.0	20.0	-	-	-
MFZ-KX	-	12.0	15.0	18.0	20.0	-	-	-
MLZ-KX	-	12.0	14.6	-	19.0	-	-	-
MSZ-FX	9.0	12.0	13.2	16.5	17.0	-	-	-
MSZ-GX	7.2	10.9	14.4	18.0	21.6	27.6	-	-
PEAD-AA	-	12.0	14.0	18.0	19.0	26.0	30.8	38.0
PLA-AE	-	-	14.0	-	19.0	26.0	32.0	38.0

9-1-5. Heating calculation

- Tentative selection of indoor units
  Room1: PEFY-L/M30 34.0 kBtu/h (Nominal)
  Room2: PEFY-L/M36 40.0 kBtu/h (Nominal)
  In this case, the total capacity is 74.0. (34.0 + 40.0 = 74.0)
- Tentative selection of outdoor unit
  Proper outdoor unit in this case is SM72TL as the total capacity of the indoor units is 74.0.
  SM72TL 80.0 kBtu/h
- Calculation for the corrected capacity of the total indoor units (CTi)
  Correction factor for indoor temperature: Room 1 (69.8°F) 1.00 (Refer to 9-2.)
  Room 2 (73.4°F) 0.92 (Refer to 9-2.)
  CTi = Σ (Rated capacity of indoor unit × Correction factor for indoor temperature)
  = 34.0 × 1.00 + 40.0 × 0.92
  = 70.8 kW
- Calculation for the corrected capacity of the outdoor unit (CTo)
  Correction factor for outdoor temperature (35.6°F WB) 1.00 (Refer to 9-2.)
  Correction factor for piping length (196 ft) 0.96 (Refer to 9-4.)
  Correction factor for defrosting 0.89 (Refer to 9-5.)
  CTo = Rated capacity of outdoor unit × Correction factor for outdoor temperature × Correction factor for piping length × Correction factor for defrosting (× G(CTi))*1
  = 80.0 × 1.00 × 0.96 × 0.89
  = 68.35 kBtu/h

*1. G(CTi) is used only when greater than 100% indoor model size are connected in total. Refer to Standard capacity diagram.

- Determination of maximum system capacity (CTx)
  Comparison between CTi and CTo:
  CTi = 70.8 > CTo = 68.35, thus, select CTo.
  CTx = CTo = 68.35 kBtu/h
- Comparison with essential load
  Against the essential load 67.5 kBtu/h, the maximum system capacity is 68.35 kBtu/h: Proper indoor units have been selected.
- Calculation for the maximum indoor unit capacity of each room

When CTx = CTo, use the calculation formula below.
Room1: CTx × Corrected capacity for Room1/CTi
= 68.35 × (34.0 × 1.00)/70.8
= 32.8 kBtu/h
The capacity is enough for the heating load of Room 1 (32.2 kW): A proper indoor unit is selected.
Room2: CTx × Corrected capacity for Room1/CTi
= 68.35 × (40.0 × 0.92)/(70.8)
= 35.5 kW
The capacity is enough for the heating load of Room 2 (35.3 kW): A proper indoor unit is selected.

Note:
- The selection of units is completed when proper units are selected.

9-1-6. Power input of outdoor unit

- Outdoor unit: MXZ-SM72TL
- Indoor unit 1: PEFY-L/M30
  Indoor unit 2: PEFY-L/M36

■ Cooling

- Nominal power input of outdoor unit 5.67 kW
- Calculation of the average indoor temperature power input coefficient
  - Coefficient of the outdoor unit for indoor unit 1
    (Outdoor temp. 98.6°F [37.0°C] D.B., Indoor temp. 64.4°F [18.0°C] W.B.)
    0.93 (Refer to 9-2.)
  - Coefficient of the outdoor unit for indoor unit 2
    (Outdoor temp. 98.6°F [37.0°C] D.B., Indoor temp. 64.4°F [18.0°C] W.B.)
    0.93 (Refer to 9-2.)
  - Average indoor temp. power input coefficient (Cave) = $\sum_{k=1}^{n}\{Ck \times (Mk/\sum_{k=1}^{n}Mk)\}$
    n: Total number of the indoor units
    k: Number of the indoor unit
    ck: Outdoor unit power input coefficient of k indoor unit room temp.
    Mk: Number part of the k indoor unit model (e.g. P80: 80)
  - Correction Coefficient of Indoor temperature = 0.93 × 30/(30 + 36) + 0.93 × 36/(30 + 36)
    = 0.93
- Coefficient of the partial load f(CTi)
  Total indoor units capacity = 30 + 36 = 66, thus, f(CTi) = 0.89 (Refer to the tables in 5-4. “Standard Capacity Diagram”.)
- Outdoor power input (PIo)
  Maximum System Capacity (CTx) = Total outdoor unit capacity (CTo), so use the following formula:
  PIo = Outdoor unit cooling nominal power input × Correction coefficient of indoor temperature × f(CTi)
  = 5.67 × 0.93 × 0.89
  = 4.69 kW

■ Heating

- Nominal power input of outdoor unit 5.36 kW
- Calculation of the average indoor temperature power input coefficient
  - Coefficient of the outdoor unit for indoor unit 1 (Outdoor temp. 35.6°F [2.0°C] W.B., Indoor temp. 69.8°F [21.0°C] D.B.)
    1.20 (Refer to 9-2.)
  - Coefficient of the outdoor unit for indoor unit 2 (Outdoor temp. 35.6°F [2.0°C] W.B., Indoor temp. 73.4°F [23.0°C] D.B.)
    1.04 (Refer to 9-2.)
  - Average indoor temp. power input coefficient (Cave) = $\sum_{k=1}^{n}\{Ck \times (Mk/\sum_{k=1}^{n}Mk)\}$
    n: Total number of the indoor units
    k: Number of the indoor unit
    ck: Outdoor unit power input coefficient of k indoor unit room temp.
    Mk: Number part of the k indoor unit model (e.g. P80: 80)
  - Correction Coefficient of Indoor temperature = 1.20 × 30/(30 + 36) + 1.04 × 36/(30 + 36)
    = 1.11
- Coefficient of the partial load f(CTi)
  Total indoor units capacity = 30 + 36 = 66, thus, f(CTi) = 0.9 (Refer to the tables in 5-4. “Standard capacity diagram”.)
- Outdoor power input (PIo)
  Maximum System Capacity (CTx) = Total Indoor unit capacity (CTi), so use the following formula
  PIo = Outdoor unit heating nominal power input × Correction coefficient of indoor temperature × f(CTi)
  = 5.36 × 1.11 × 0.9
  = 5.35 kW

9-2. Correction by temperature

CITY MULTI indoor unit could have varied capacity at different designing temperature. Using the nominal cooling/heating capacity value and the ratio below, the capacity can be observed at various temperature.

MXZ-			MXZ-SM36NL-U1	MXZ-SM48NL-U1
Nominal Cooling capacity		Btu/h	36,000	48,000
		kW	10.6	14.1
	Input *1	kW	2.555/3.600	4.000/5.715

MXZ-			MXZ-SM60NL-U1
Nominal Cooling capacity		Btu/h	60,000
		kW	17.6
	Input *1	kW	5.000/6.385

*1 non-ducted/ducted

Indoor unit temperature correction

To be used to correct indoor unit capacity only

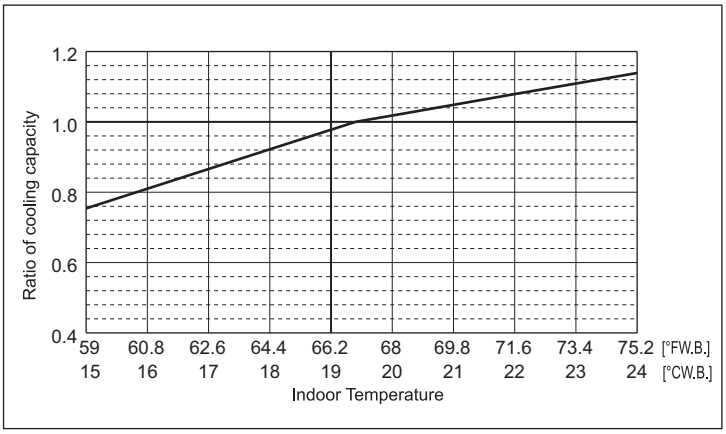

Outdoor unit temperature correction

To be used to correct outdoor unit only

Outdoor unit capacity is NOT affected by the indoor temperature.
Outdoor unit power input is affected by the indoor and outdoor temperatures. Please consult the sales office for details.

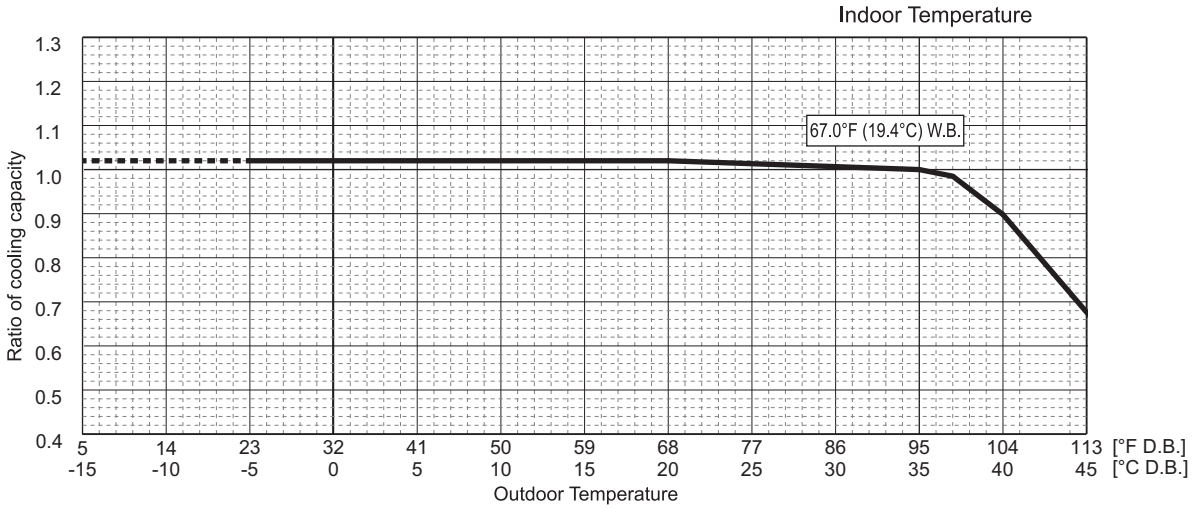

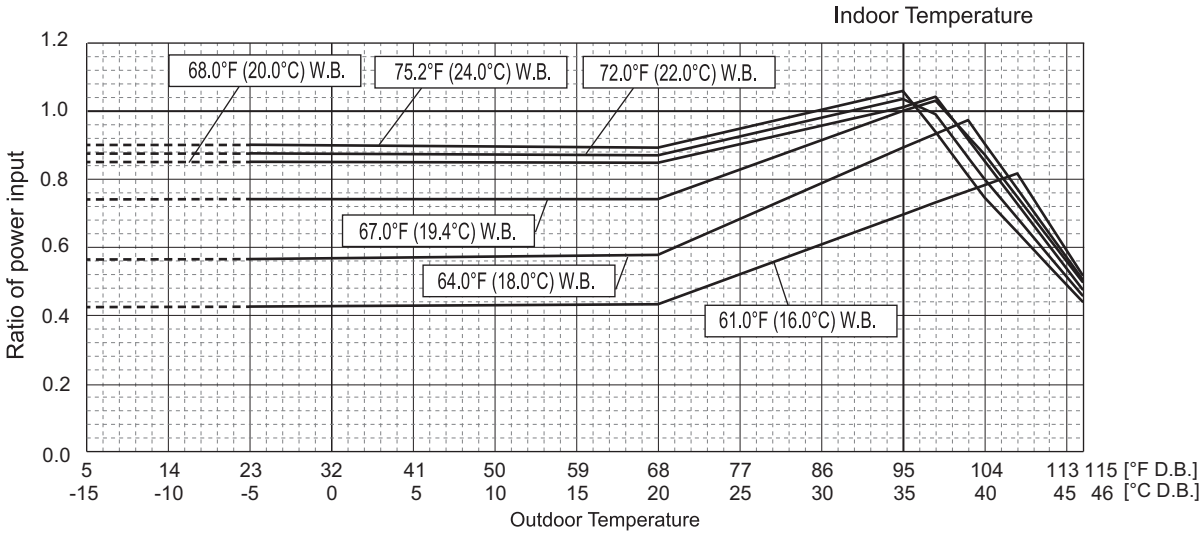

Values in the cooling temperature correction diagram in the range below -5°C (23°F) are reference values and not guaranteed values.
Do not use these reference values for selecting outdoor unit models.

MXZ-			MXZ-SM36NL-U1	MXZ-SM48NL-U1
Nominal Heating capacity		Btu/h	41,000	50,000
		kW	12.0	14.7
	Input *1	kW	3.005/3.880	3.665/4.730

*1 non-ducted/ducted

Indoor unit temperature correction

To be used to correct indoor unit capacity only

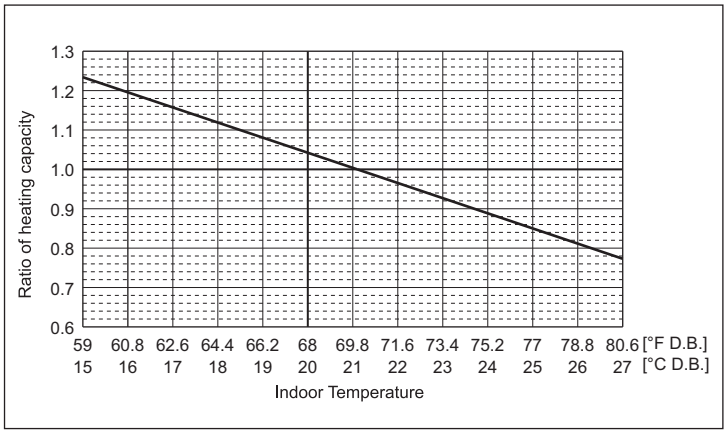

Outdoor unit temperature correction

To be used to correct outdoor unit only

Outdoor unit capacity is NOT affected by the indoor temperature.
Outdoor unit power input is affected by the indoor and outdoor temperatures. Please consult the sales office for details.

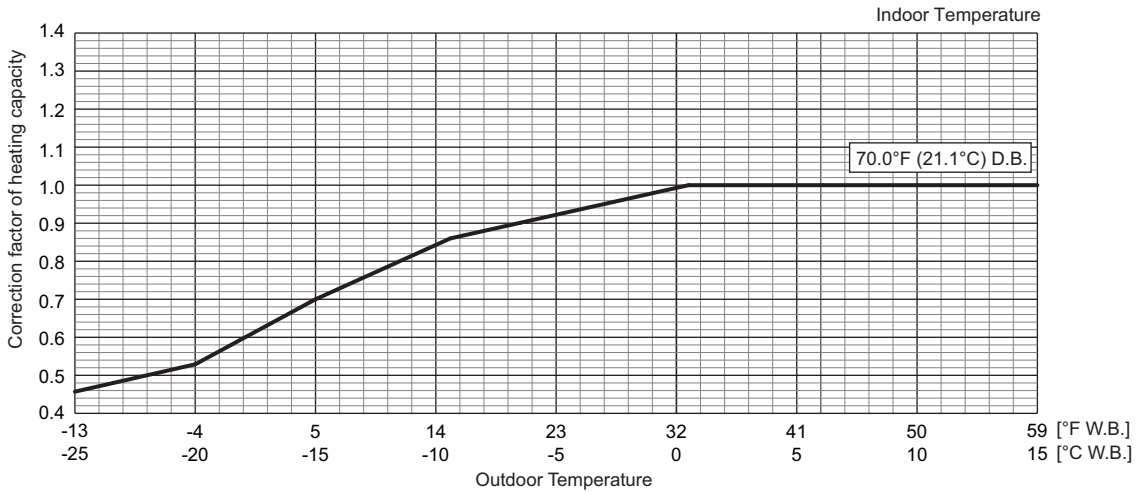

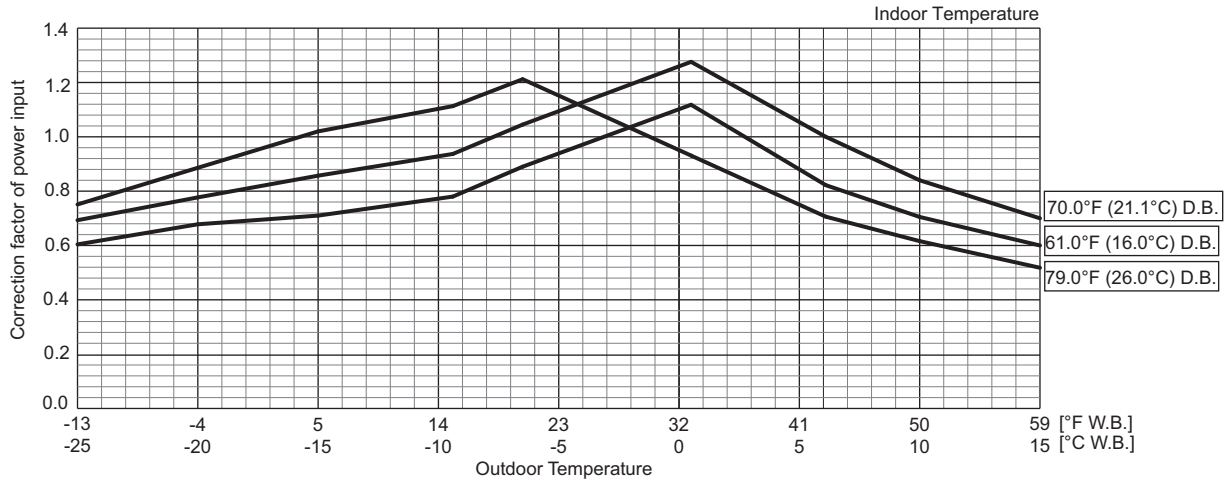

MXZ-			MXZ-SM60NL-U1
Nominal Heating capacity		Btu/h	66,000
		kW	19.3
	Input *1	kW	4.720/5.865

*1 non-ducted/ducted

Indoor unit temperature correction

To be used to correct indoor unit capacity only

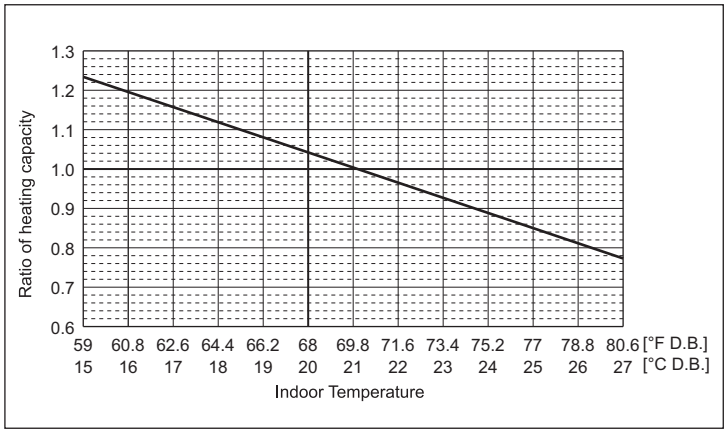

Outdoor unit temperature correction

To be used to correct outdoor unit only

Outdoor unit capacity is NOT affected by the indoor temperature.

Outdoor unit power input is affected by the indoor and outdoor temperatures. Please consult the sales office for details.

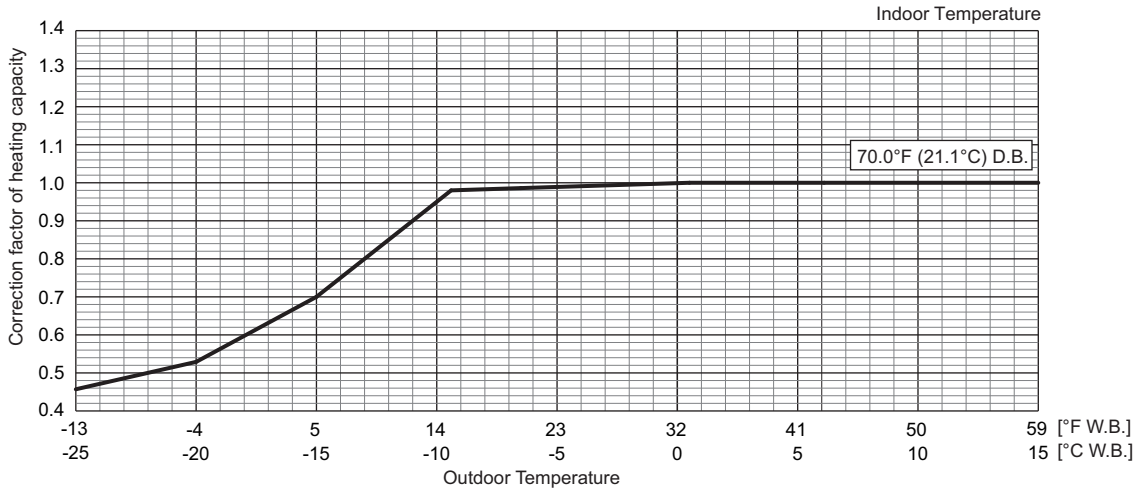

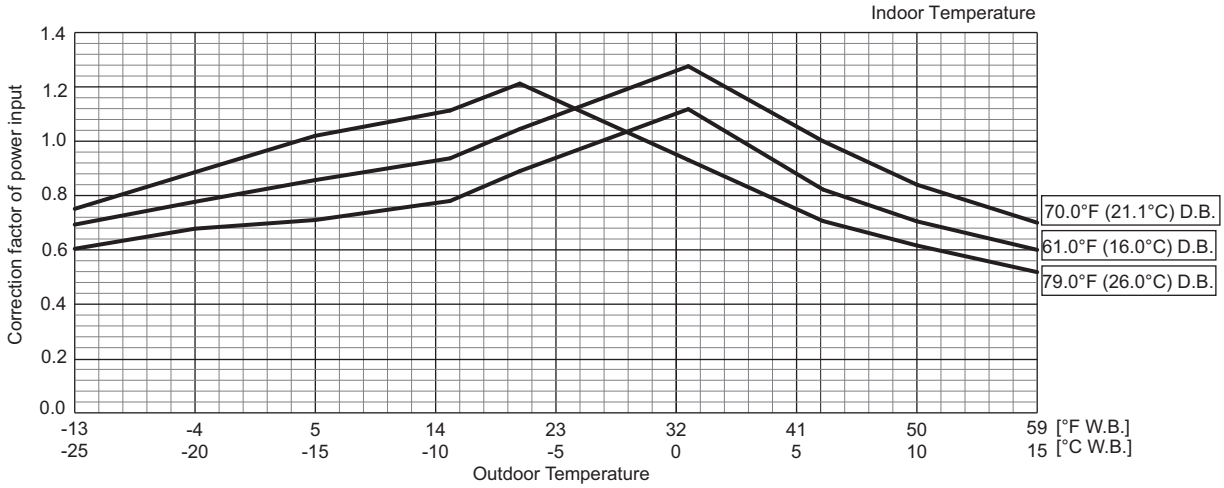

MXZ-			MXZ-SM36NLHZ-U1	MXZ-SM42NLHZ-U1
Nominal Cooling capacity		Btu/h	36,000	42,000
		kW	10.6	12.3
	Input *1	kW	2.485/3.305	3.135/4.040

MXZ-			MXZ-SM48NLHZ-U1	MXZ-SM60NLHZ-U1
Nominal Cooling capacity		Btu/h	48,000	60,000
		kW	14.1	17.6
	Input *1	kW	3.665/4.800	5.000/6.385

*1 non-ducted/ducted

Indoor unit temperature correction

To be used to correct indoor unit capacity only

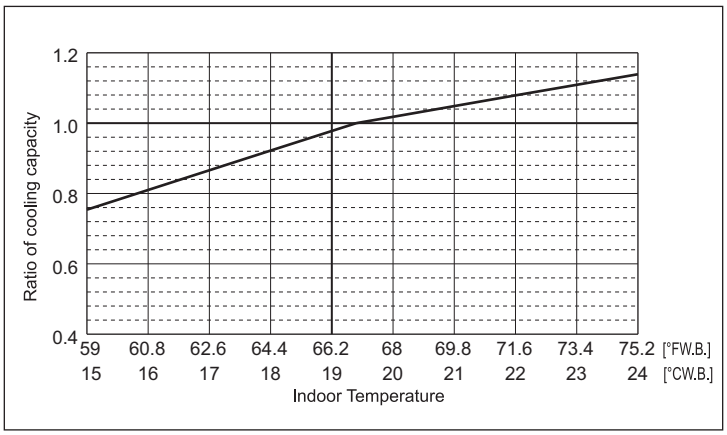

Outdoor unit temperature correction

To be used to correct outdoor unit only

Outdoor unit capacity is NOT affected by the indoor temperature.

Outdoor unit power input is affected by the indoor and outdoor temperatures. Please consult the sales office for details.

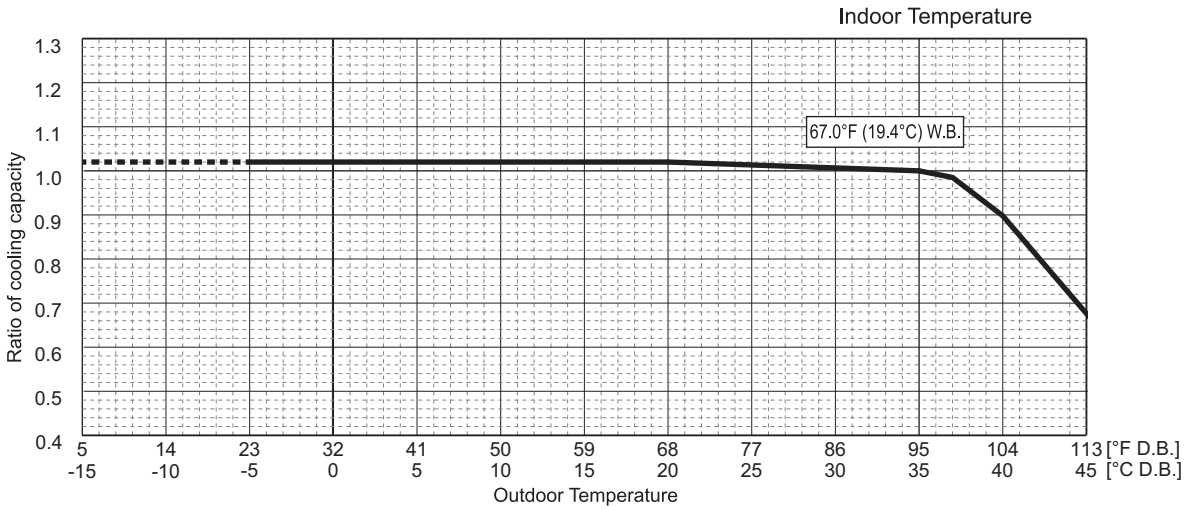

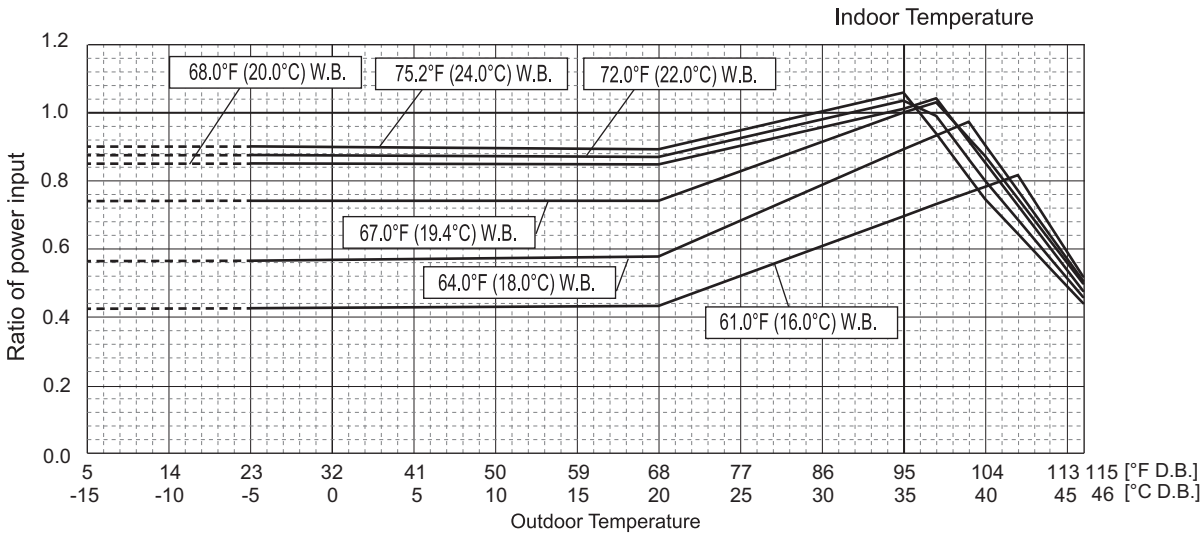

Values in the cooling temperature correction diagram in the range below -5°C (23°F) are reference values and not guaranteed values.
Do not use these reference values for selecting outdoor unit models.

MXZ-			MXZ-SM36NLHZ-U1	MXZ-SM42NLHZ-U1
Nominal Heating capacity		Btu/h	42,000	48,000
		kW	12.3	14.1
	Input *1	kW	3.080/3.620	3.435/4.690

MXZ-			MXZ-SM48NLHZ-U1
Nominal Heating capacity		Btu/h	54,000
		kW	15.8
	Input *1	kW	3.960/4.950

*1 non-ducted/ducted

Indoor unit temperature correction

To be used to correct indoor unit capacity only

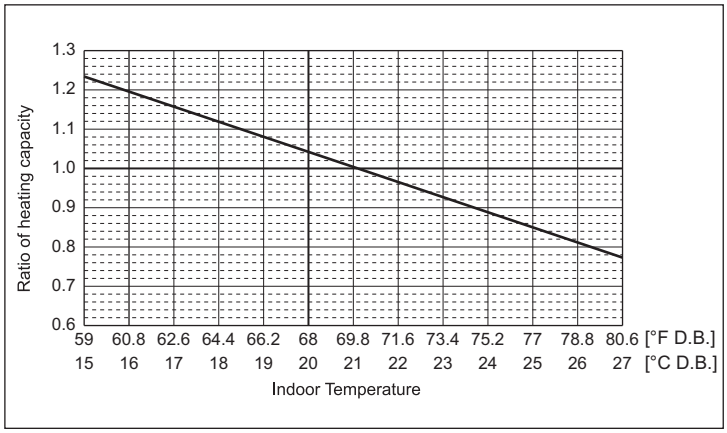

Outdoor unit temperature correction

To be used to correct outdoor unit only

Outdoor unit capacity is NOT affected by the indoor temperature.
Outdoor unit power input is affected by the indoor and outdoor temperatures. Please consult the sales office for details.

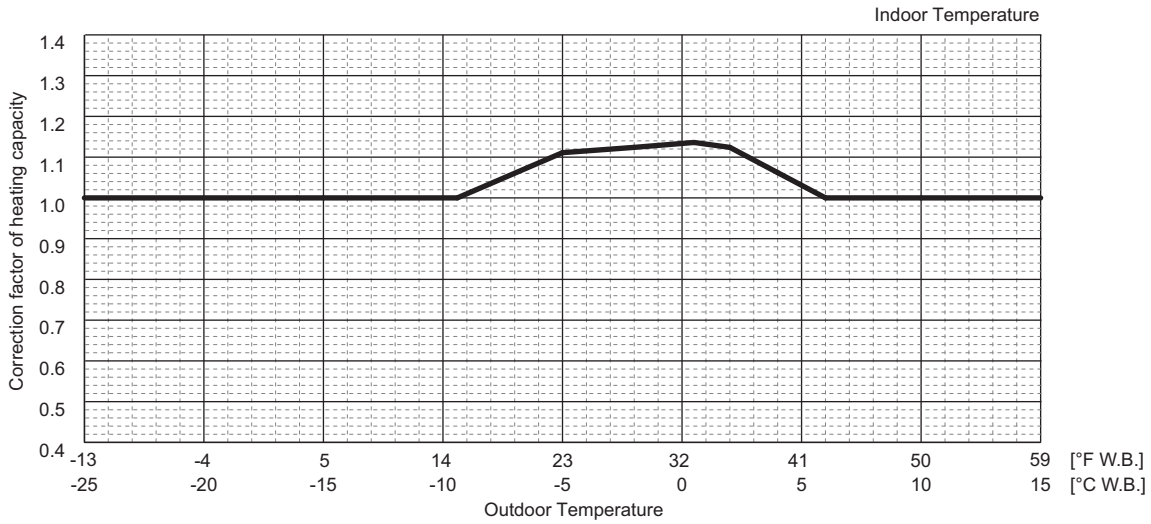

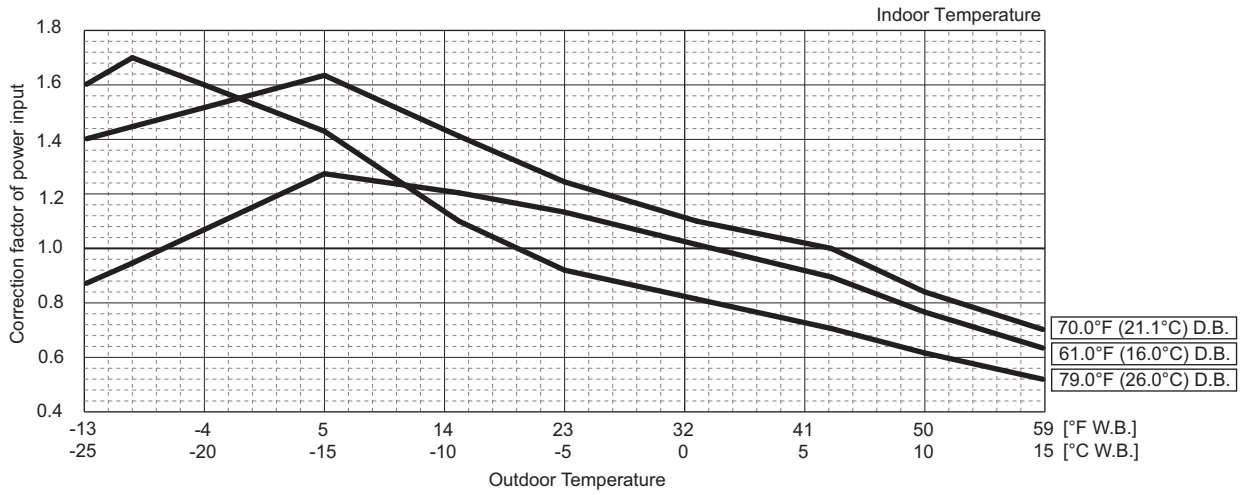

MXZ-			MXZ-SM60NLHZ-U1
Nominal Heating capacity		Btu/h	66,000
		kW	19.3
	Input *1	kW	4.720/5.865

*1 non-ducted/ducted

Indoor unit temperature correction

To be used to correct indoor unit capacity only

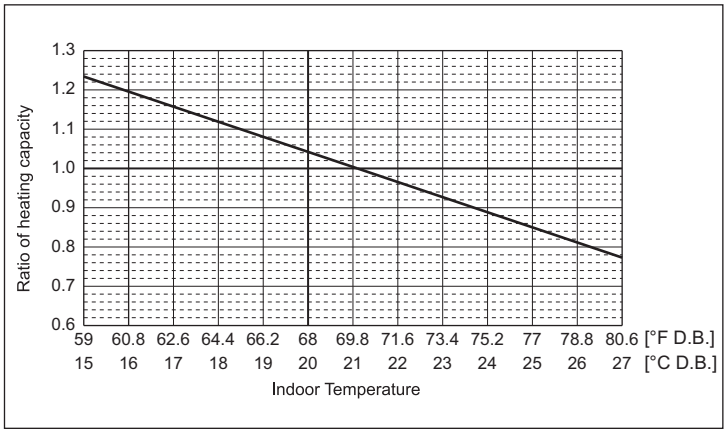

Outdoor unit temperature correction

To be used to correct outdoor unit only

Outdoor unit capacity is NOT affected by the indoor temperature.
Outdoor unit power input is affected by the indoor and outdoor temperatures. Please consult the sales office for details.

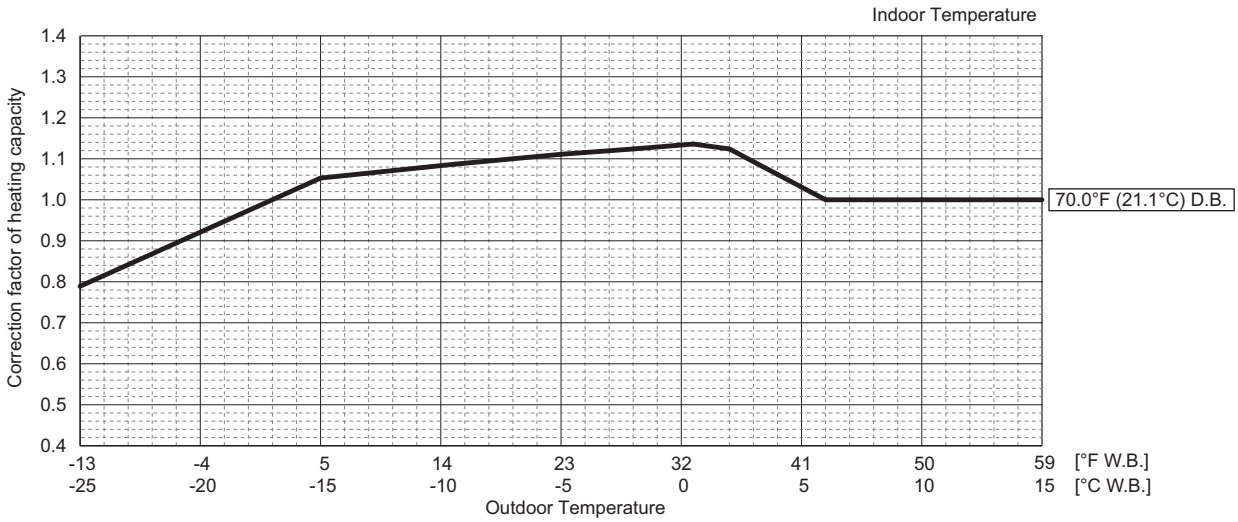

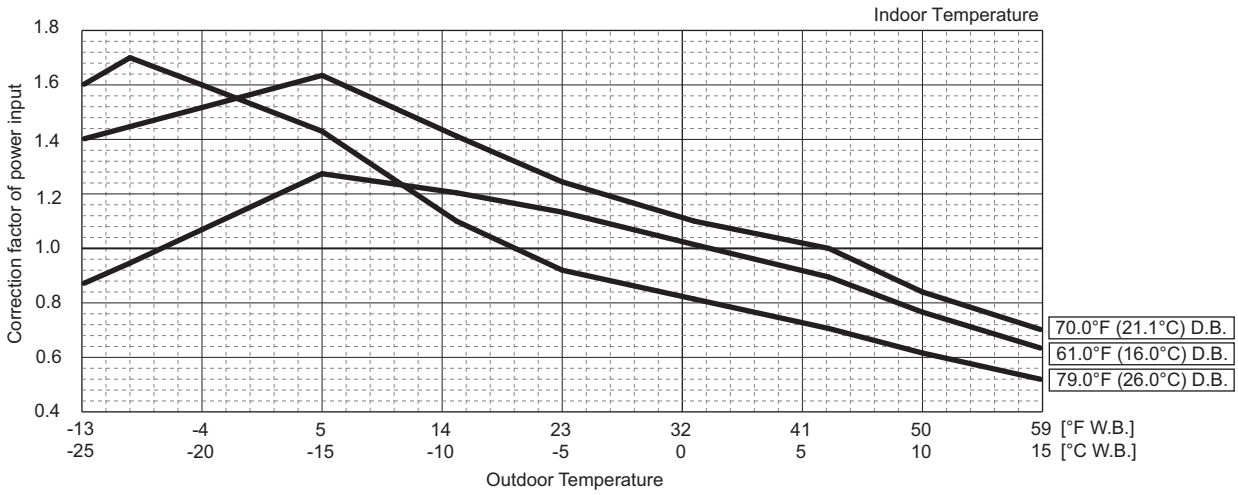

MXZ-			MXZ-SM72TL	MXZ-SM96TL
Nominal Cooling capacity		Btu/h	72,000	96,000
		kW	21.1	28.1
	Input *1	kW	5.440/5.520	7.550/7.550

MXZ-			MXZ-SM120TL
Nominal Cooling capacity		Btu/h	120,000
		kW	35.2
	Input *1	kW	9.350/9.670

*1 non-ducted/ducted

Indoor unit temperature correction

To be used to correct indoor unit capacity only

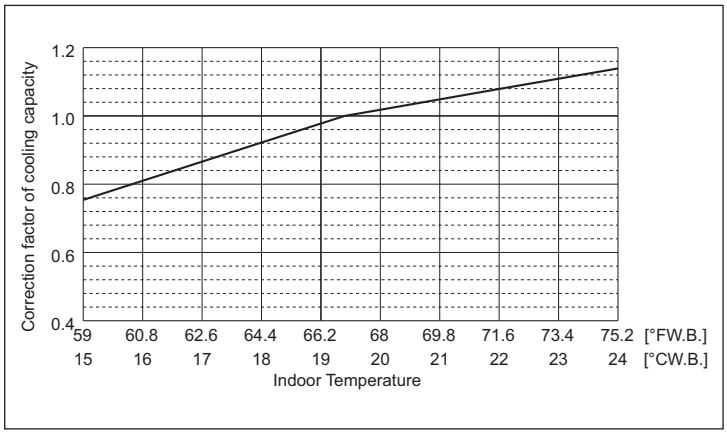

Outdoor unit temperature correction

To be used to correct outdoor unit only

Outdoor unit capacity is NOT affected by the indoor temperature.
Outdoor unit power input is affected by the indoor and outdoor temperatures. Please consult the sales office for details.

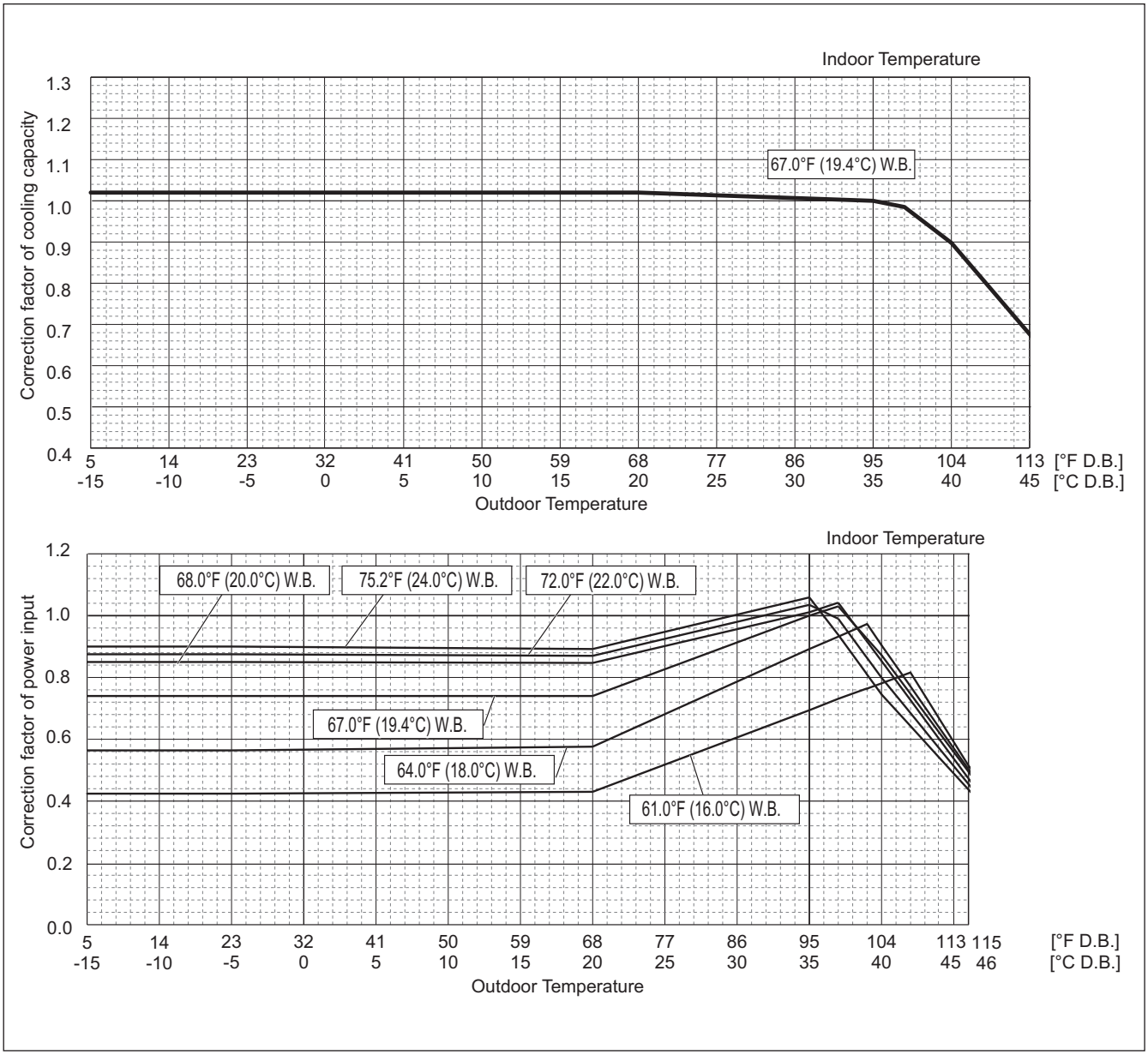

Values in the cooling temperature correction diagram in the range below -5°C (23°F) are reference values and not guaranteed values.
Do not use these reference values for selecting outdoor unit models.

MXZ-			MXZ-SM72TL	MXZ-SM96TL
Nominal Heating capacity		Btu/h	80,000	108,000
		kW	23.4	31.7
	Input *1	kW	5.160/5.380	7.460/7.890

MXZ-			MXZ-SM120TL
Nominal Heating capacity		Btu/h	129,000
		kW	37.8
	Input *1	kW	9.150/9.470

*1 non-ducted/ducted

Indoor unit temperature correction

To be used to correct indoor unit capacity only

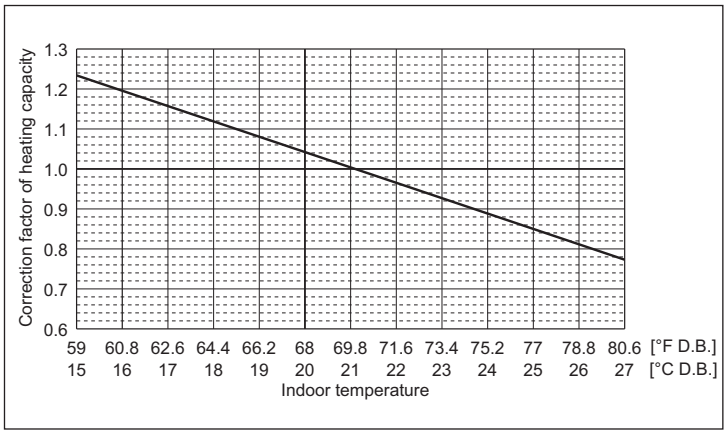

Outdoor unit temperature correction

To be used to correct outdoor unit only

Outdoor unit capacity is NOT affected by the indoor temperature.

Outdoor unit power input is affected by the indoor and outdoor temperatures. Please consult the sales office for details.

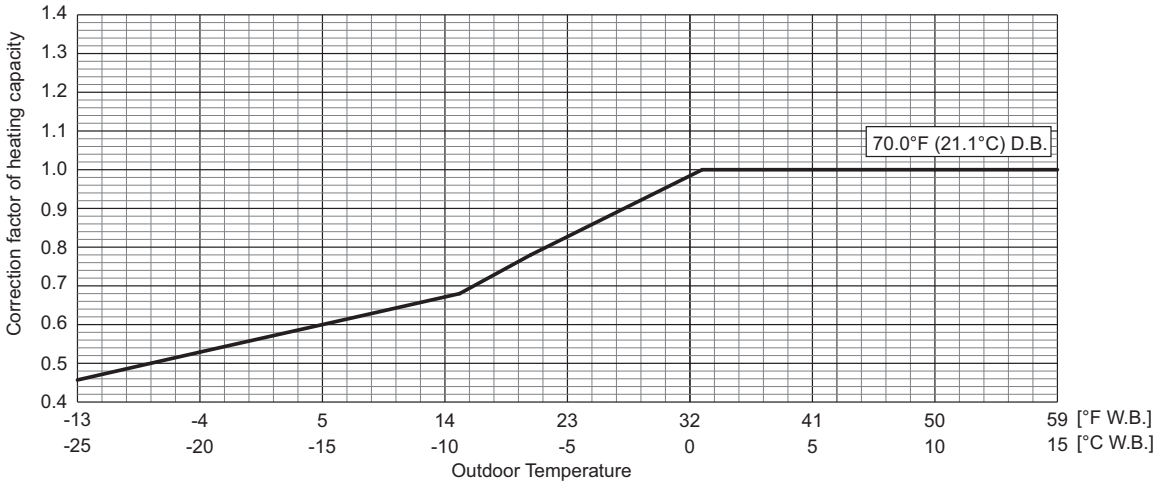

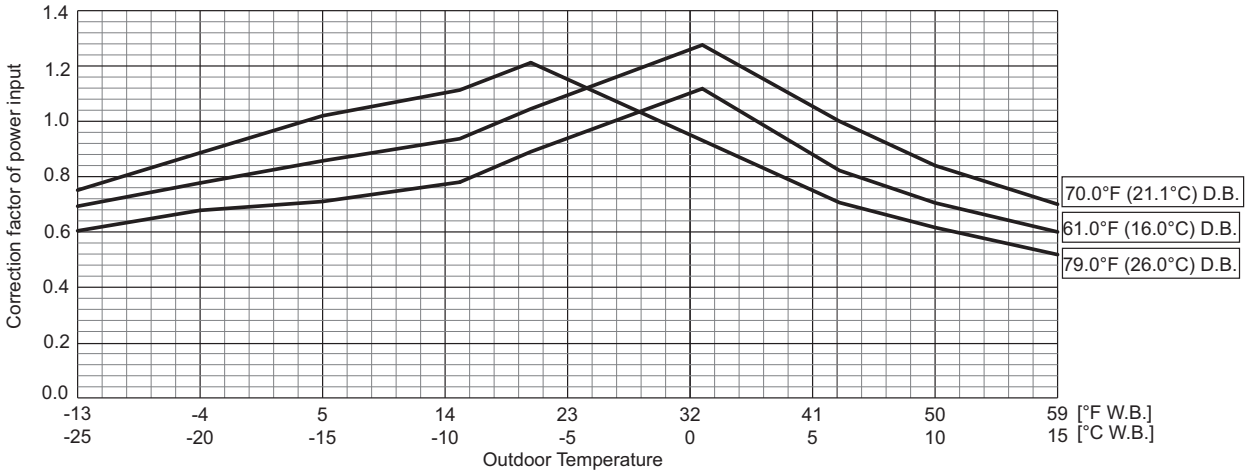

9-3. Correction by total indoor

CITY MULTI indoor unit systems have different capacities and inputs when many combinations of indoor units with different total capacities are connected. Using following tables, the maximum capacity can be found to ensure the system is installed with enough capacity for a particular application.

MXZ-SM36NL-U1
MXZ-SM36NLHZ-U1

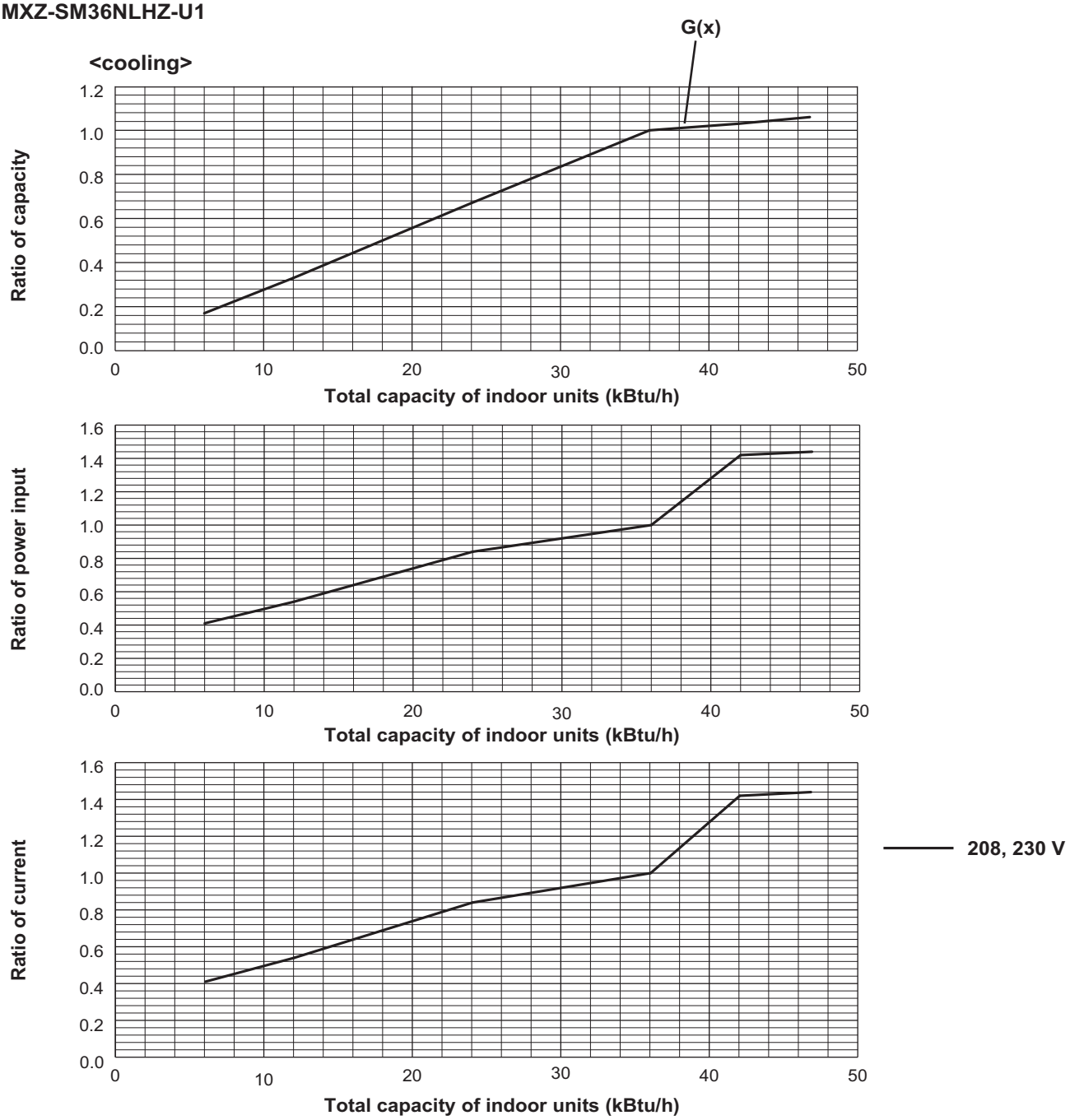

MXZ-SM36NL-U1
MXZ-SM36NLHZ-U1

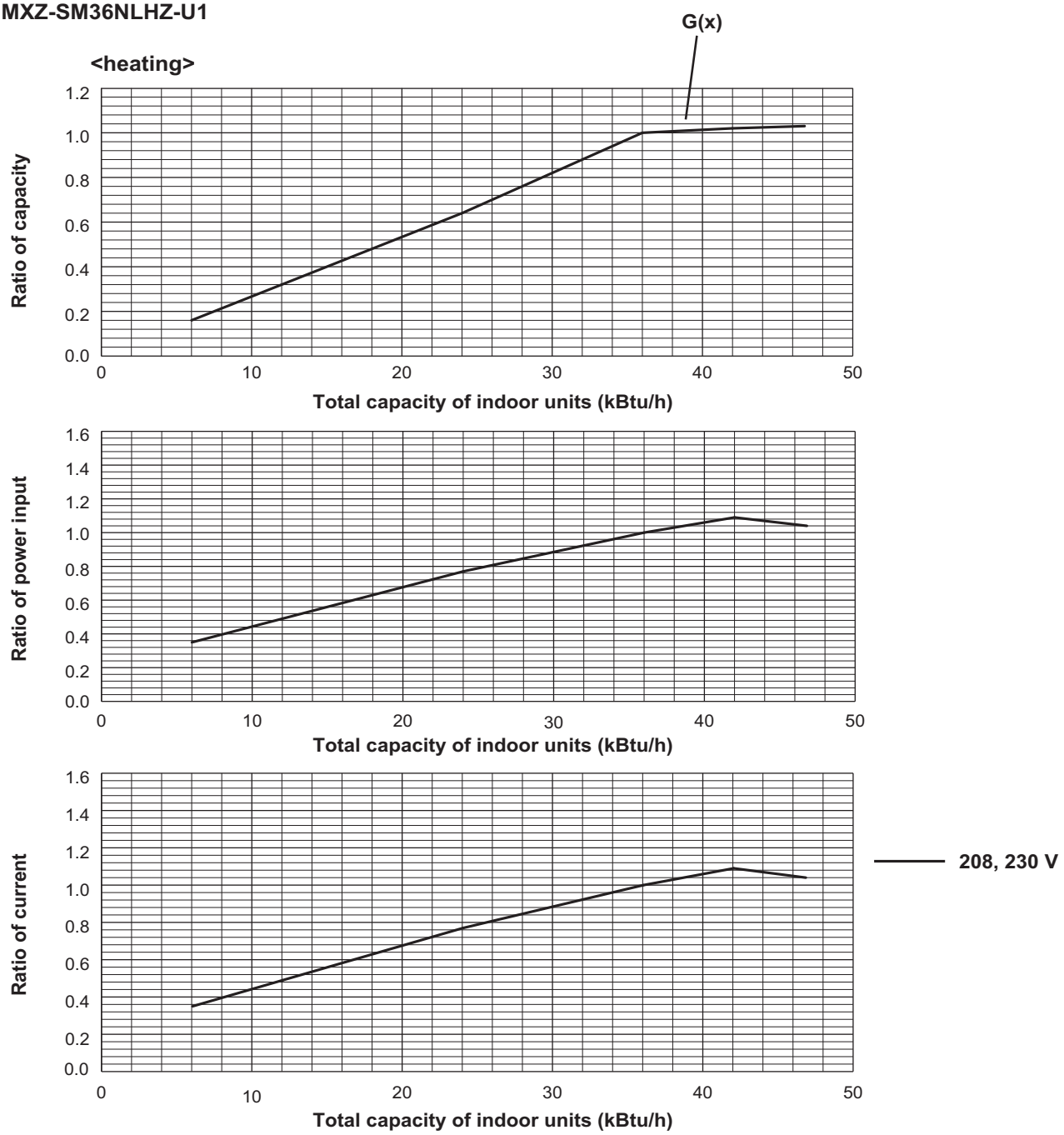

MXZ-SM42NLHZ-U1

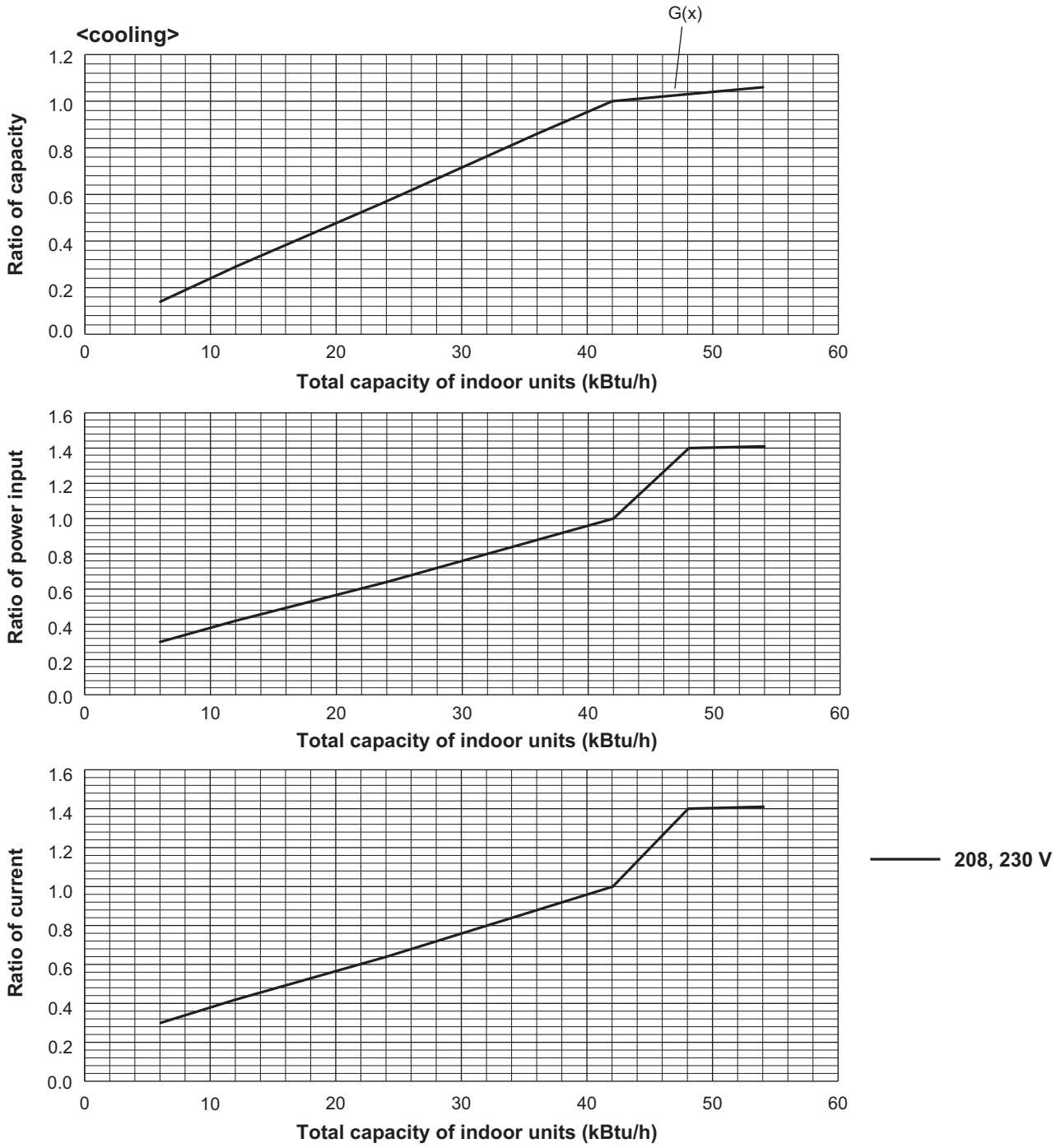

MXZ-SM42NLHZ-U1

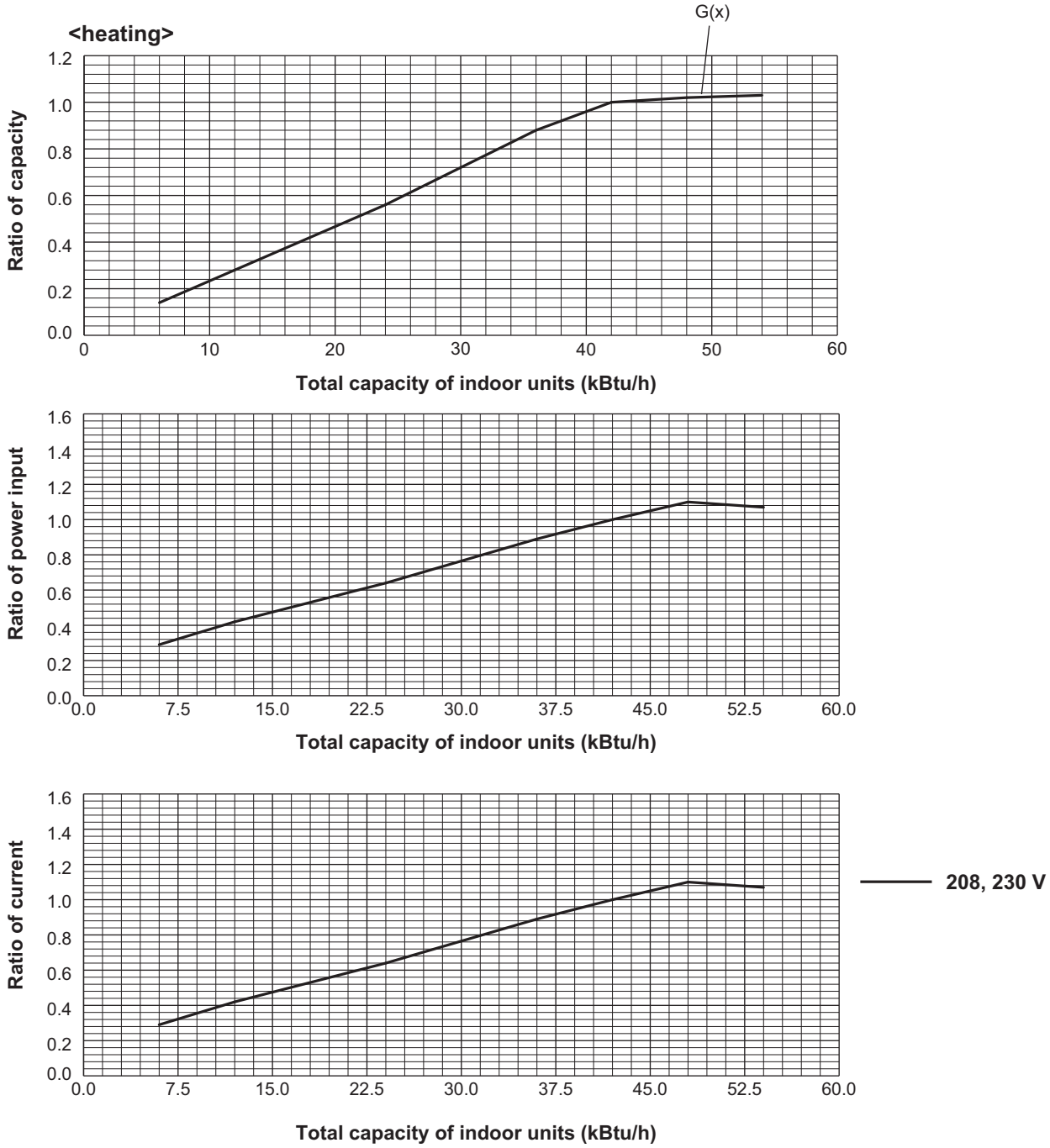

MXZ-SM48NL-U1
MXZ-SM48NLHZ-U1

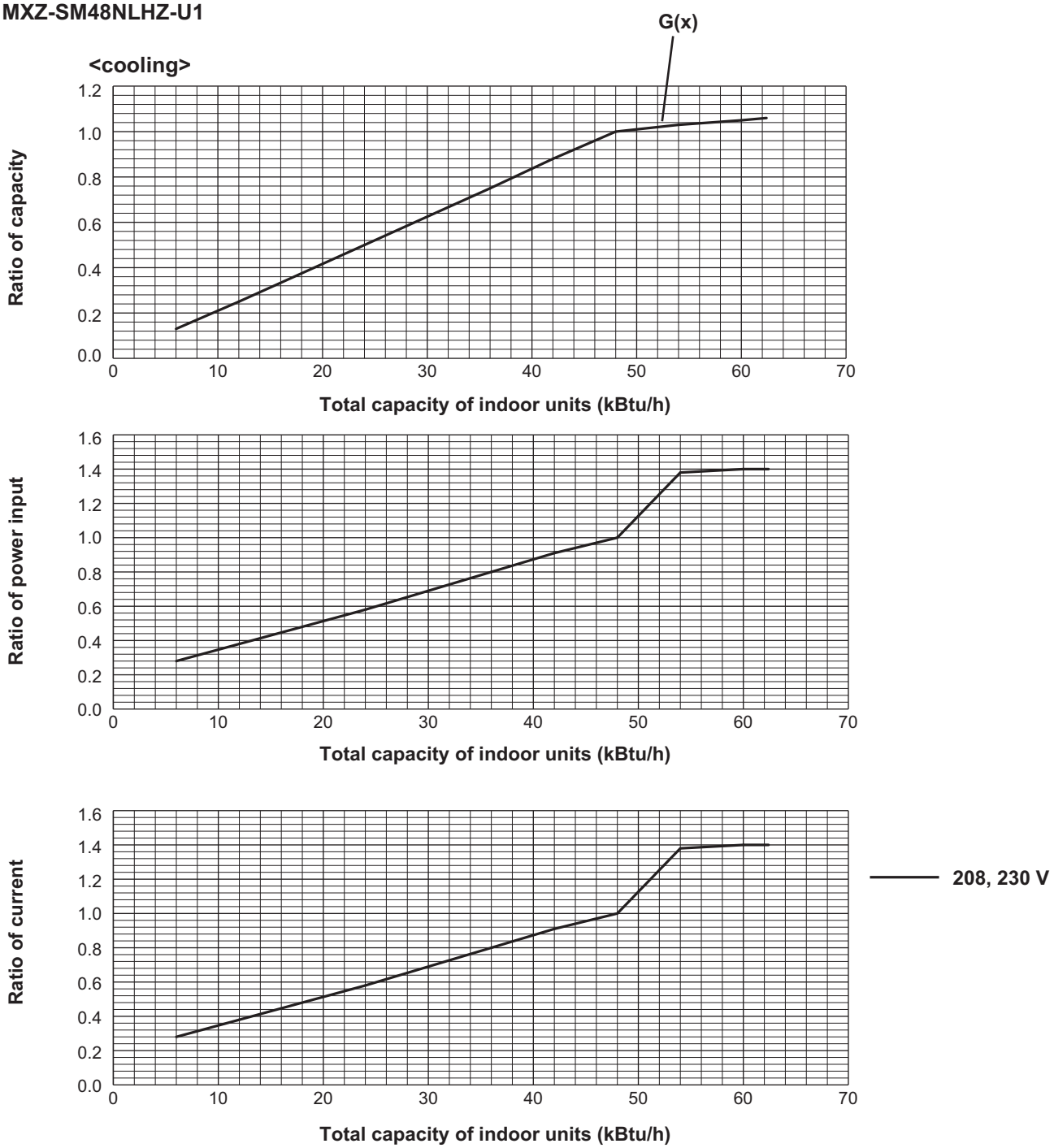

MXZ-SM48NL-U1
MXZ-SM48NLHZ-U1

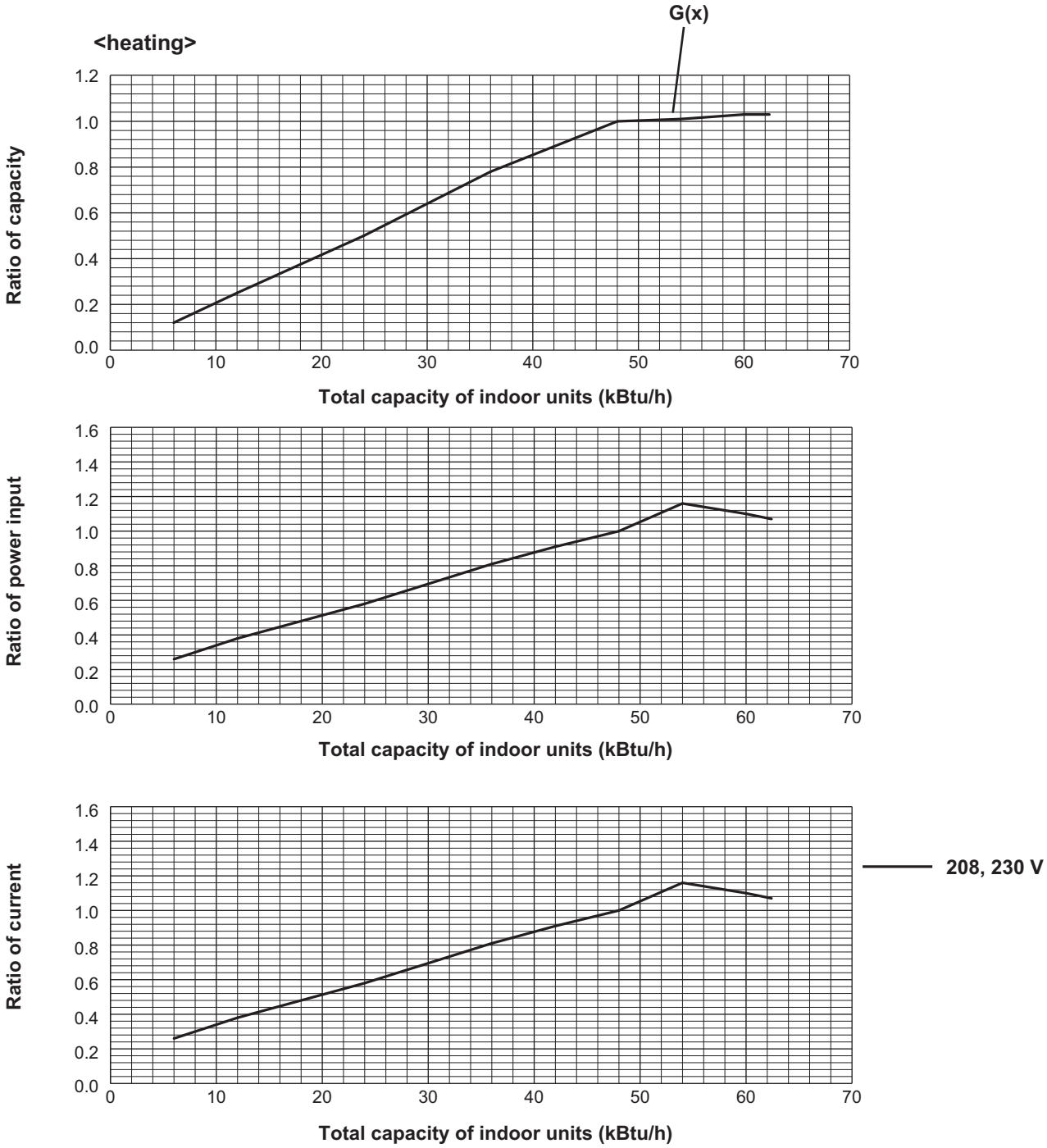

MXZ-SM60NL-U1
MXZ-SM60NLHZ-U1

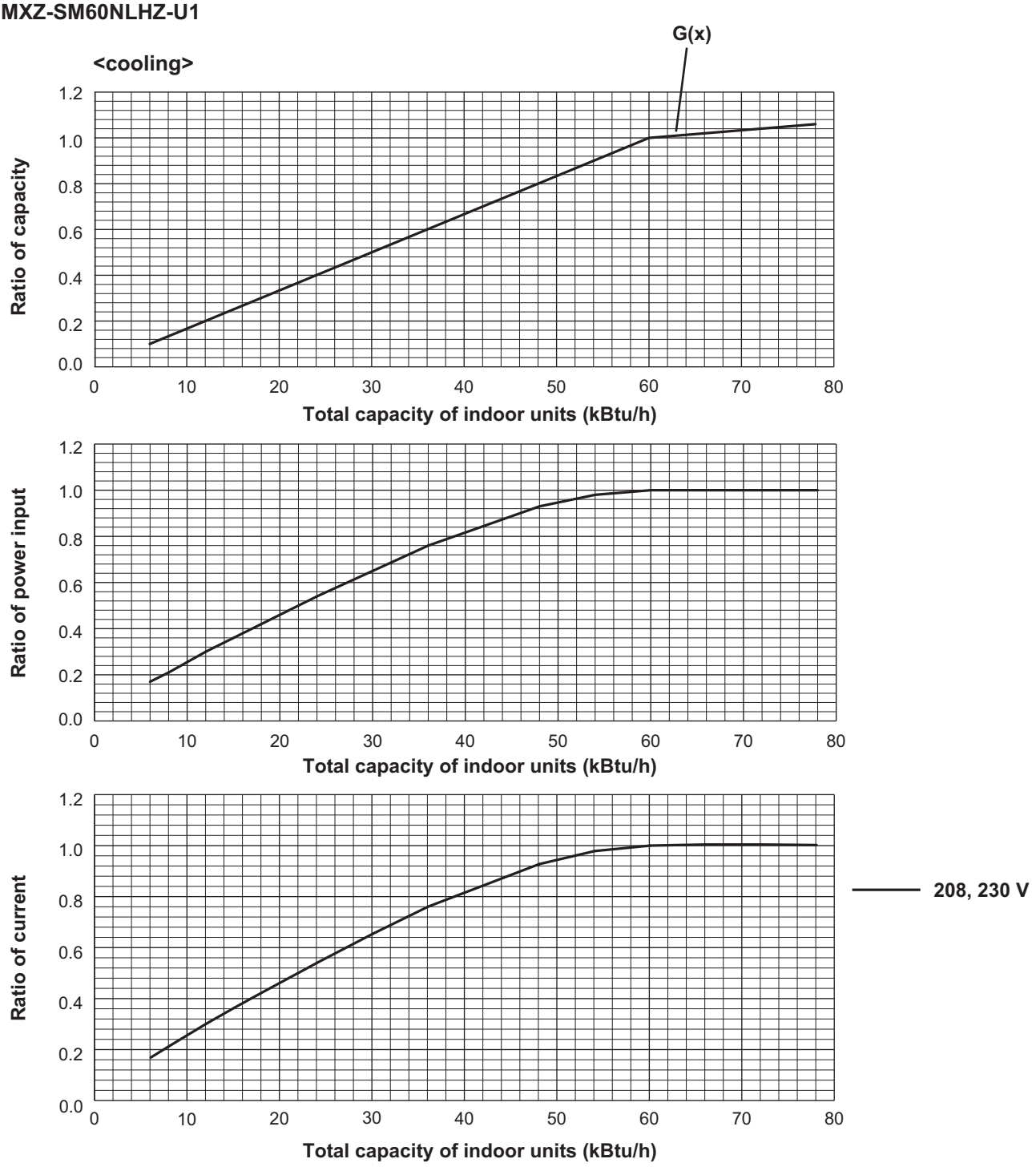

MXZ-SM60NL-U1
MXZ-SM60NLHZ-U1

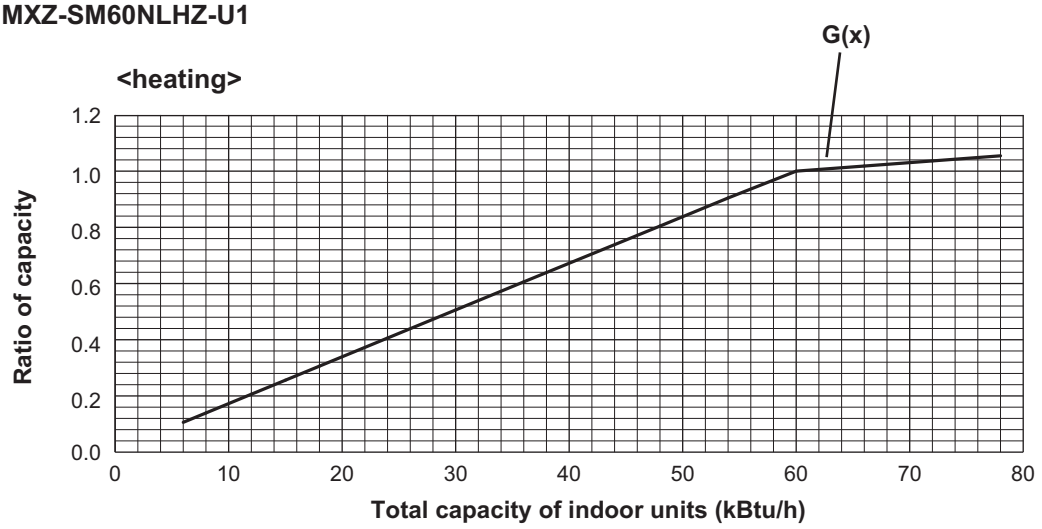

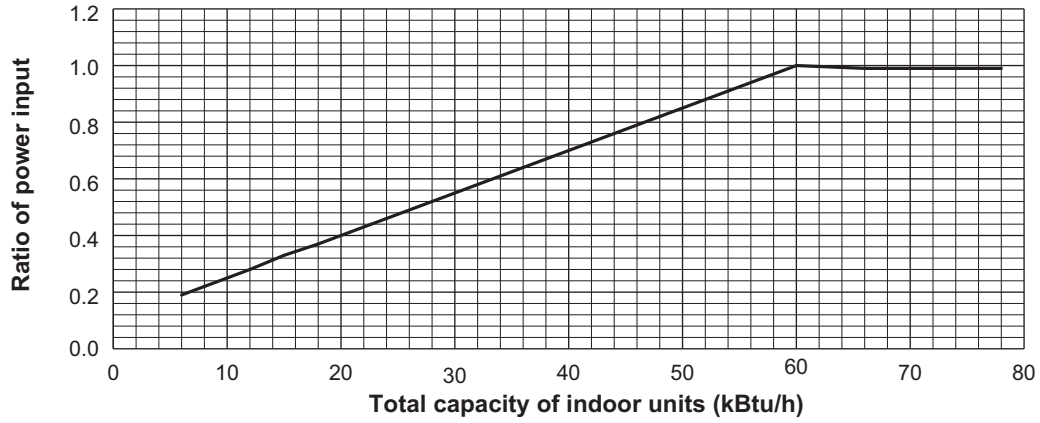

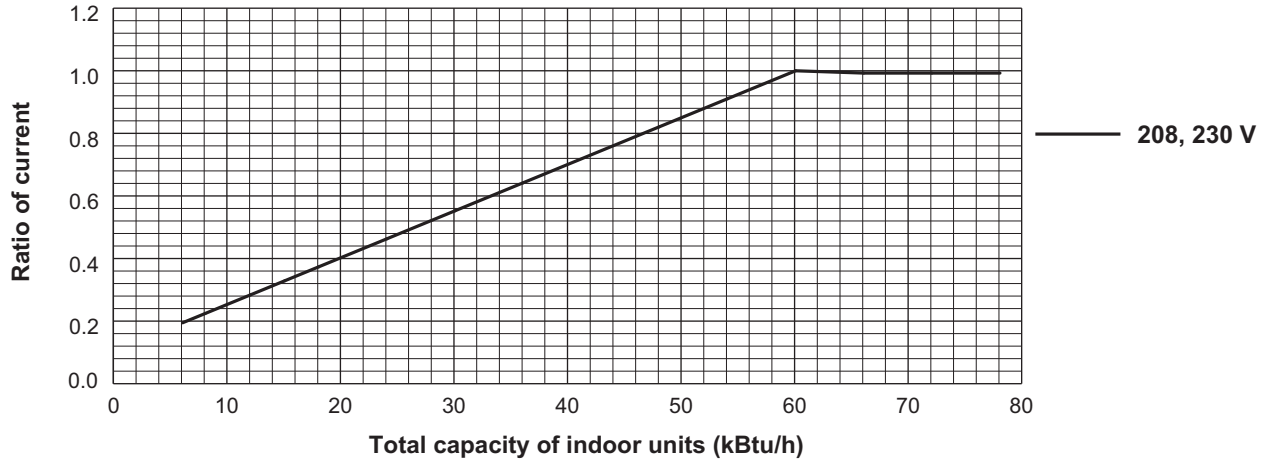

MXZ-SM72TL-U1

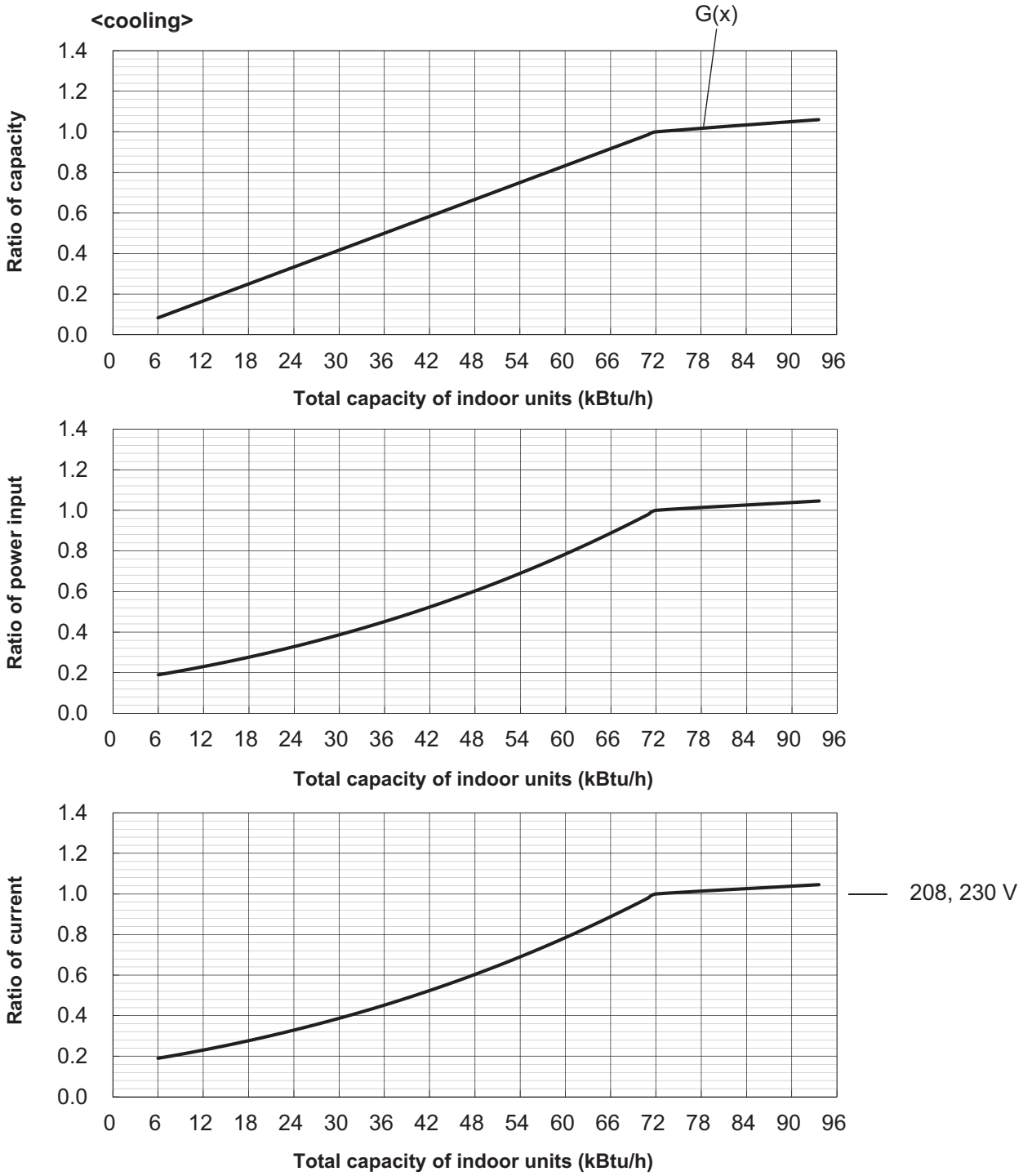

MXZ-SM72TL-U1

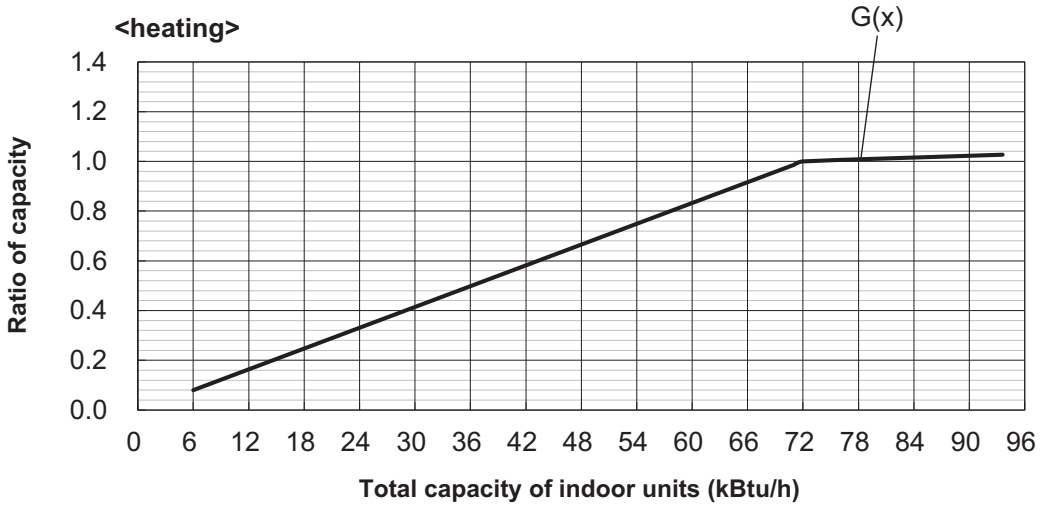

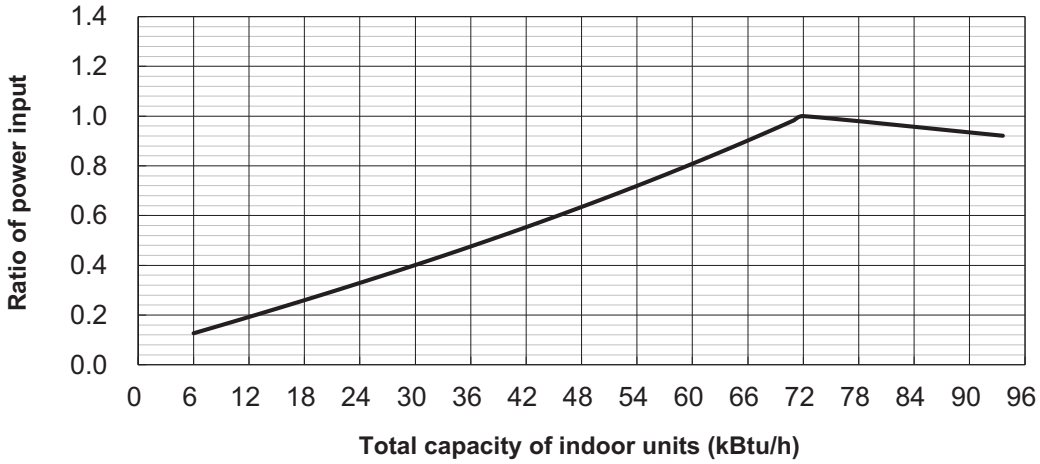

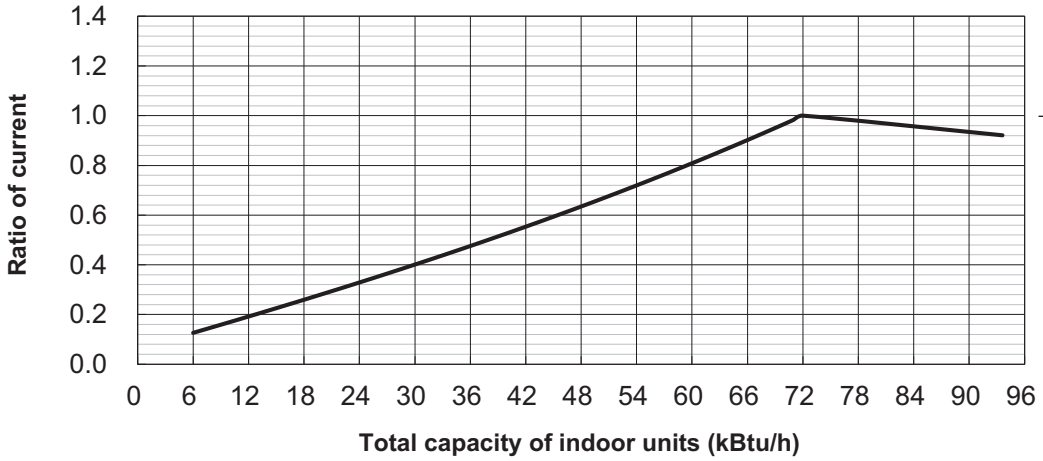

208, 230 V

MXZ-SM96TL-U1

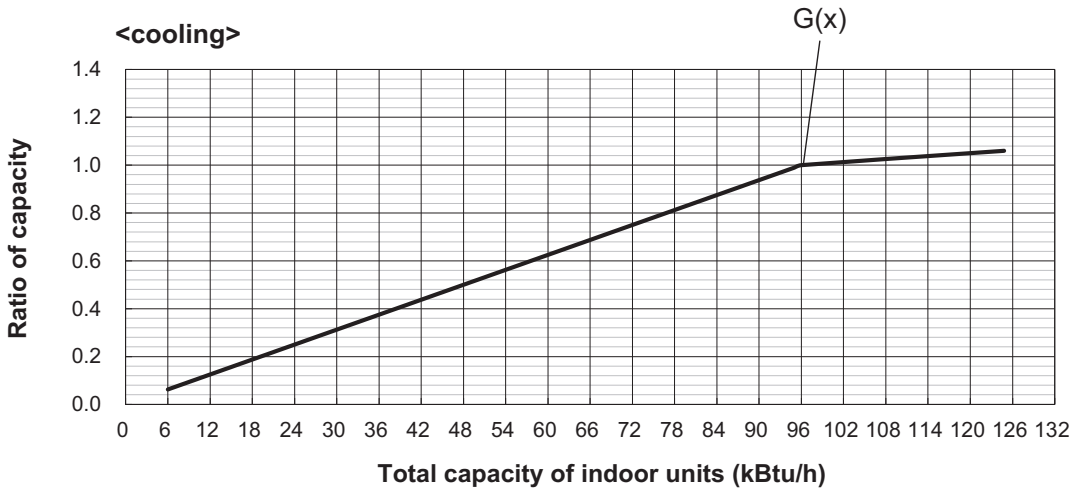

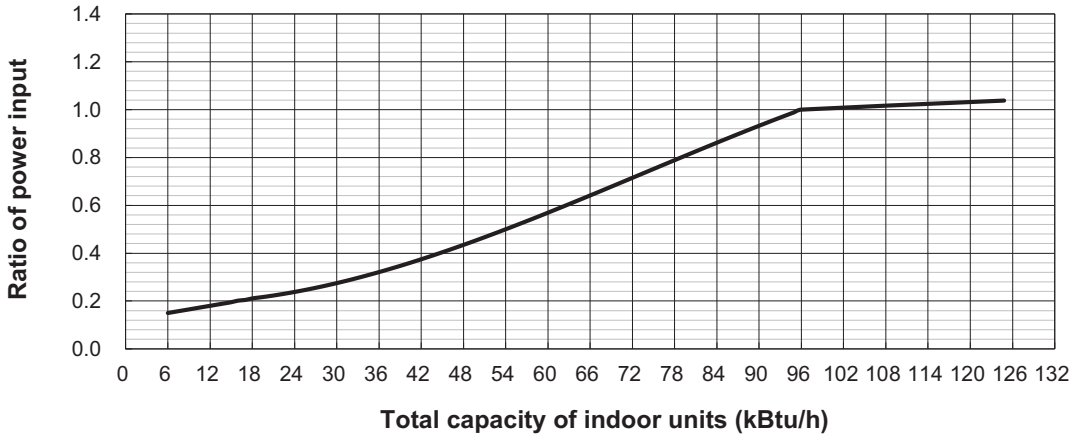

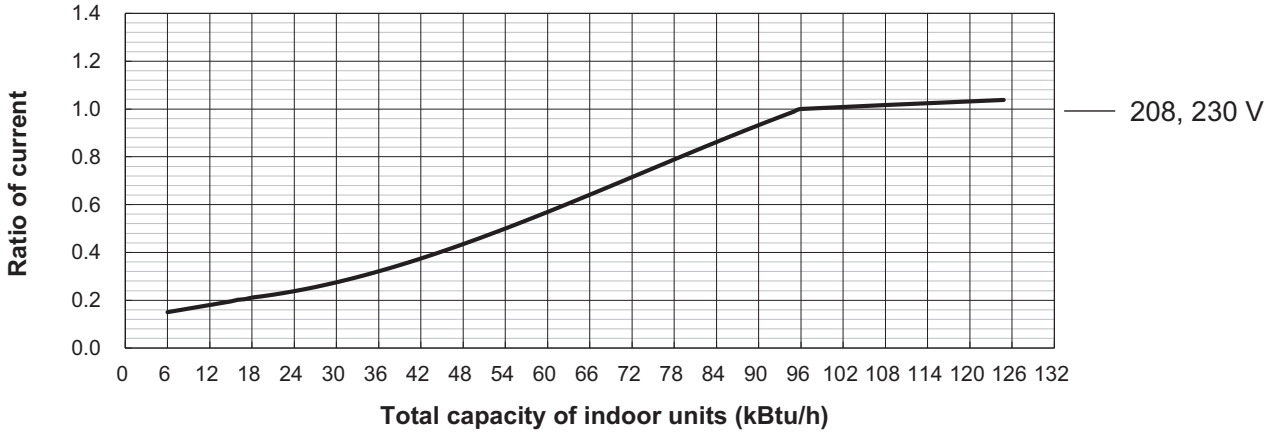

MXZ-SM96TL-U1

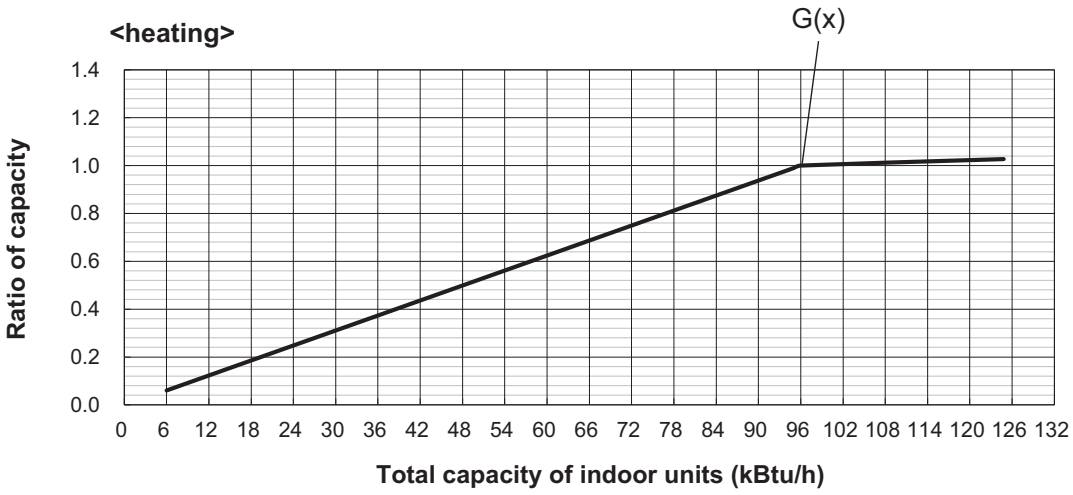

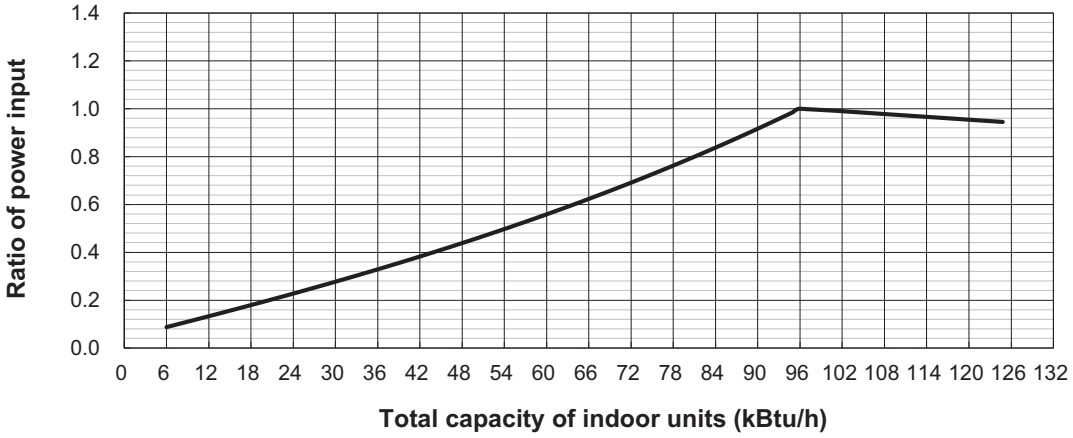

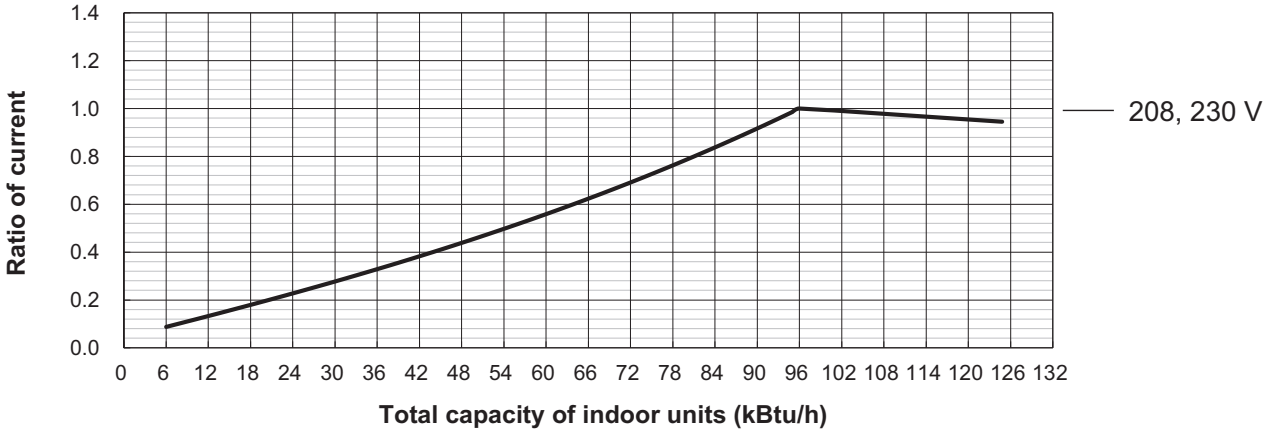

MXZ-SM120TL-U1

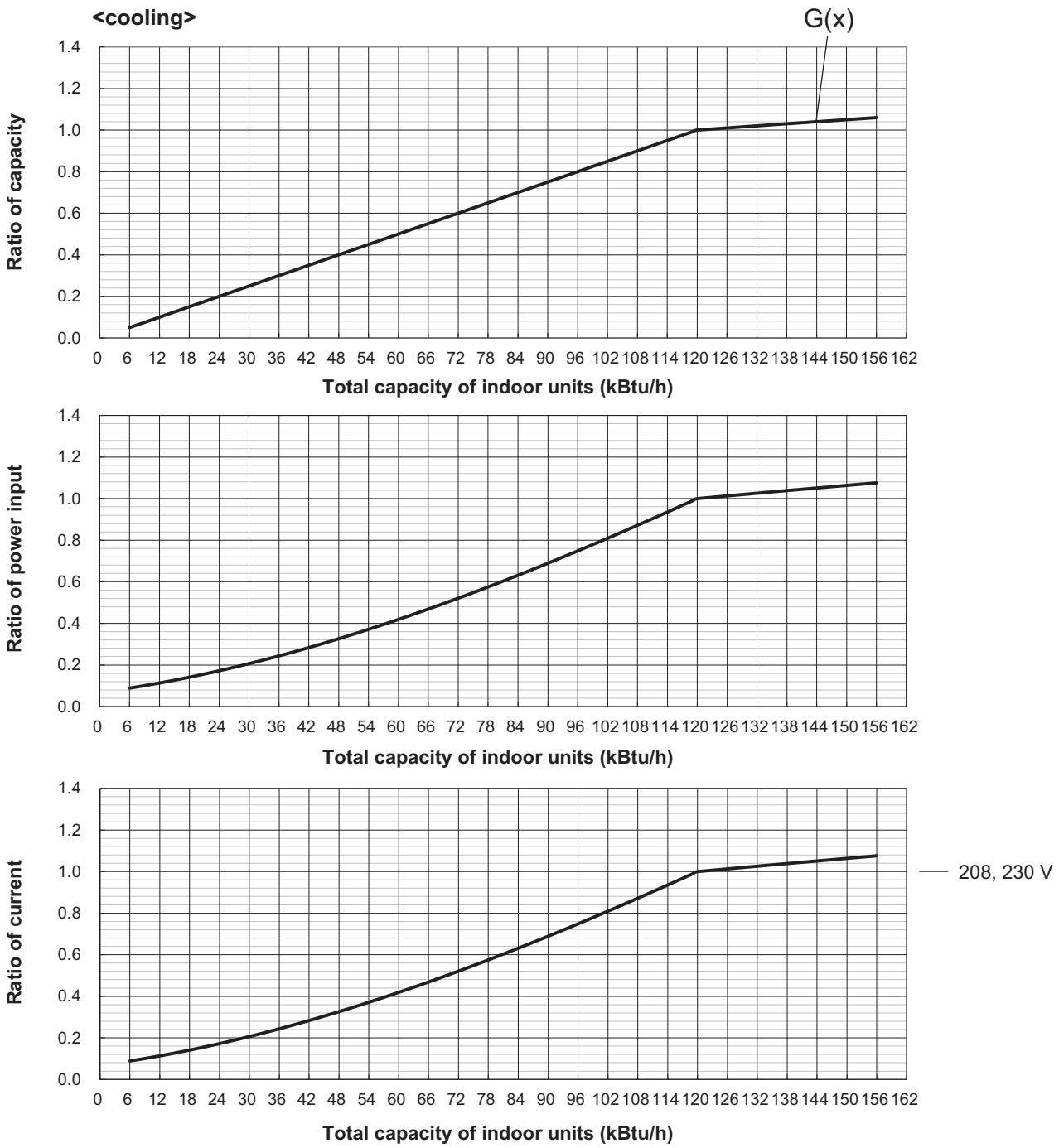

MXZ-SM120TL-U1

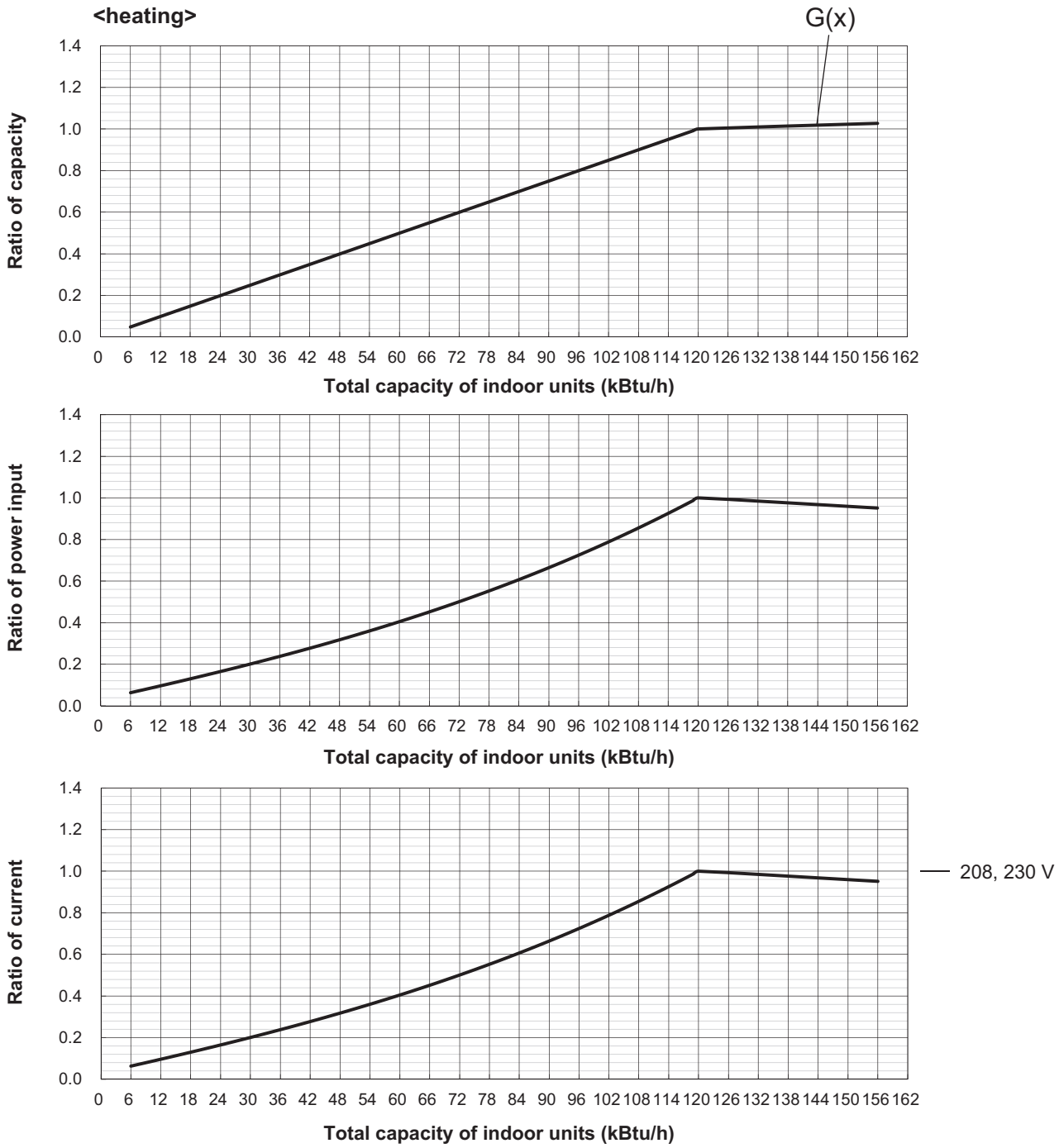

9-4. Correction by refrigerant piping length

CITY MULTI indoor unit systems can have extended piping lengths if certain limitations are followed, but cooling/heating capacity could be reduced. Using following correction factor by equivalent piping length shown at 9-4-1 and 9-4-2, capacity can be found. 9-4-3 shows how to obtain the equivalent piping length.

9-4-1. Cooling capacity correction

MXZ-SM36NL-U1, MXZ-SM36NLHZ-U1

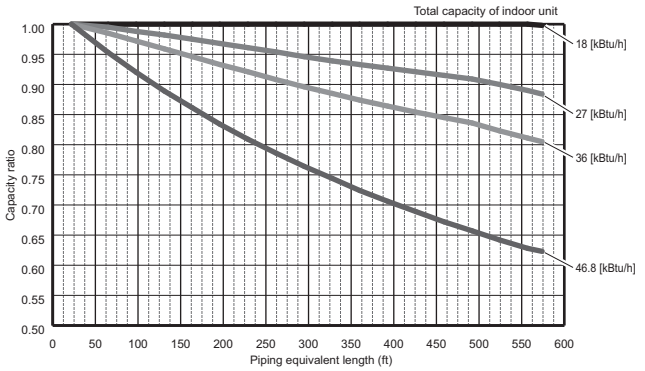

MXZ-SM42NLHZ-U1

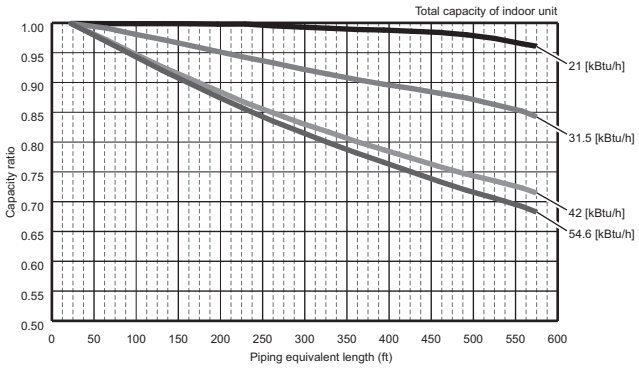

MXZ-SM48NL-U1, MXZ-SM48NLHZ-U1

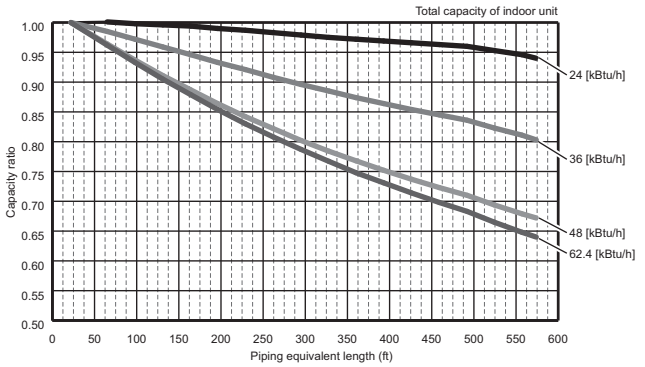

MXZ-SM60NL-U1, MXZ-SM60NLHZ-U1

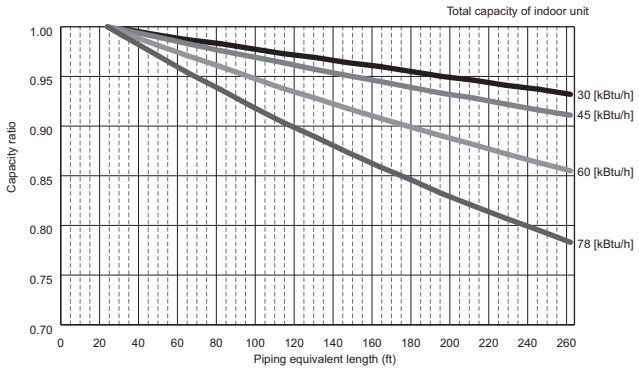

MXZ-SM72TL-U1

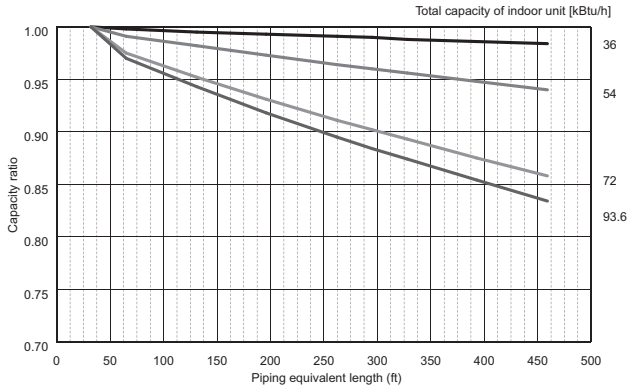

MXZ-SM96TL-U1

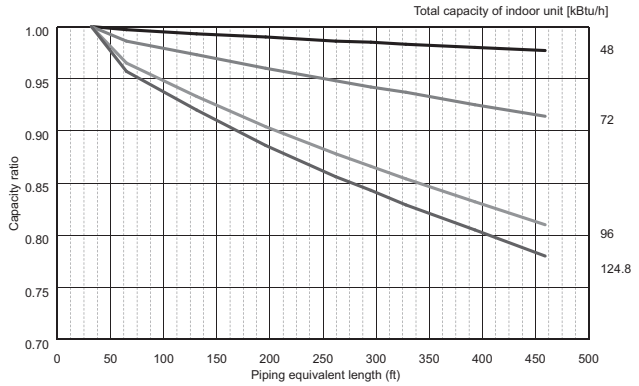

MXZ-SM120TL-U1

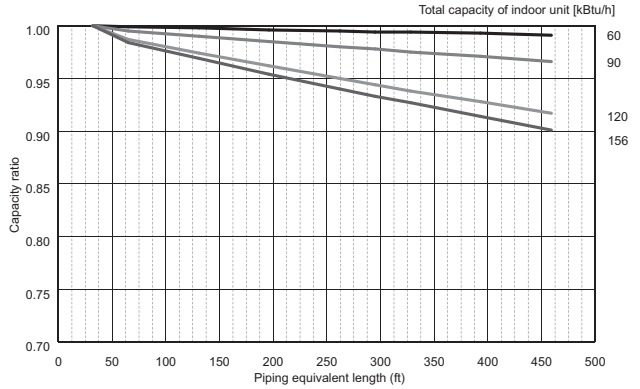

9-4-2. Heating capacity correction

MXZ-SM36, 48NL-U1, MXZ-SM36, 42, 48NLHZ-U1

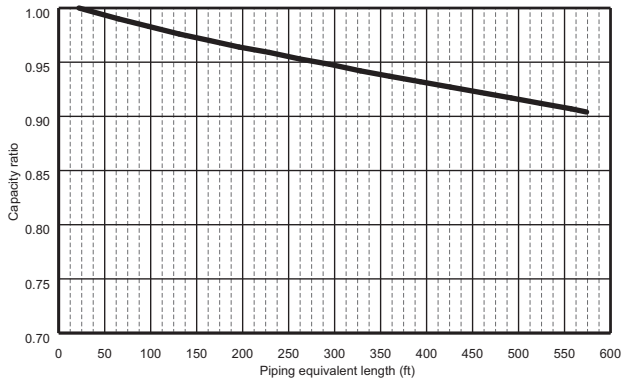

MXZ-SM60NL-U1, MXZ-SM60NLHZ-U1

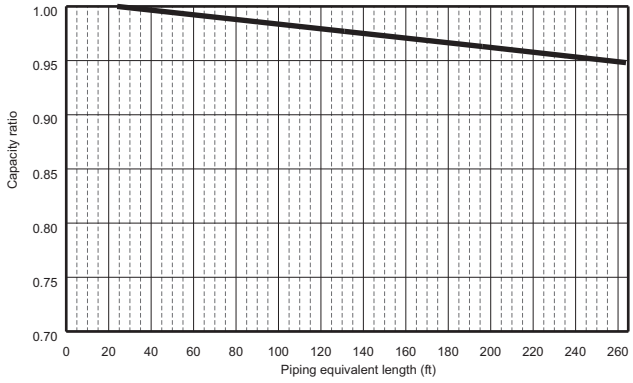

MXZ-SM72TL-U1

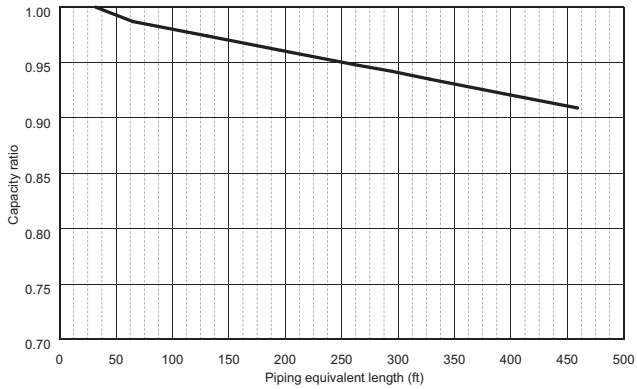

MXZ-SM96TL-U1

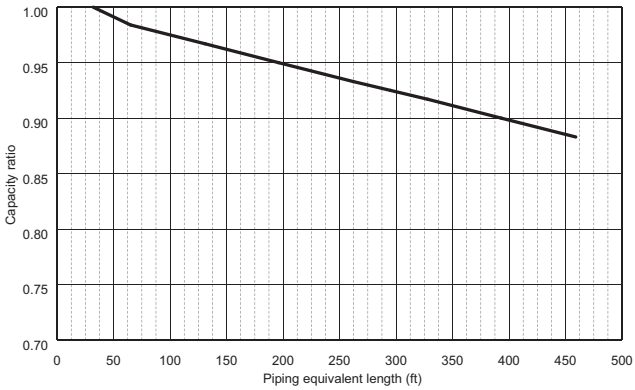

MXZ-SM120TL-U1

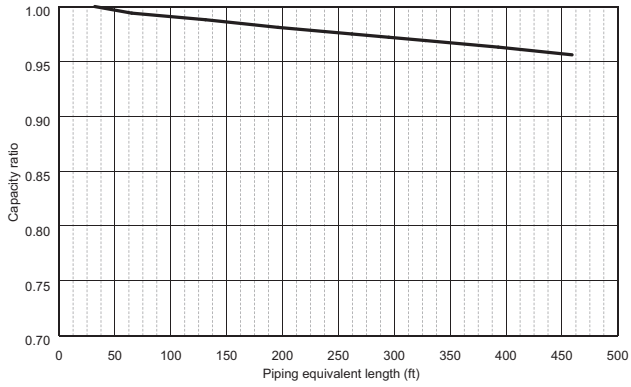

9-4-3. How to obtain the equivalent piping length

Equivalent length [m]= (Actual piping length to the farthest indoor unit) + (0.30 x number of bends in the piping)
Equivalent length [ft.]= (Actual piping length to the farthest indoor unit) + (0.99 x number of bends in the piping)

9-5. Correction at frost and defrost

Due to frost at the outdoor heat exchanger and the automatic defrost operation, the heating capacity of the outdoor unit can be calculated by multiplying the correction factor shown in the table below.

Correction factor diagram

Outdoor inlet air temp. °FWB		43	37	36	32	28	25	21	18	14	5	-4	-13
Outdoor inlet air temp. °CWB		6	4	2	0	-2	-4	-6	-8	-10	-15	-20	-25
Correction factor	MXZ-SM36,48,60NL MXZ-SM36,42,48,60NLHZ	1.00	0.94	0.85	0.84	0.85	0.86	0.95	0.95	0.95	0.95	0.95	0.95
	MXZ-SM72,96TL	1.00	0.98	0.89	0.88	0.89	0.90	0.95	0.95	0.95	0.95	0.95	0.95
	MXZ-SM120TL	1.00	0.86	0.78	0.77	0.78	0.79	0.95	0.95	0.95	0.95	0.95	0.95

Note:

- The high humidity condition (e.g., a foggy atmosphere) which causes frost forming on the heat exchanger will worsen the heating performance of the unit.
- The snow blowing to the heat exchanger will worsen the heating performance of the unit. Install a snow hood as a preventive measure.

* The correction factors in the table above are used for a full-load and above.
Use the formula below to calculate the correction factor to use for a partial load.

Correction factor for partial load: K
Correction factor for a full load and above: K_0
Partial load factor: A

$$K = 1 - (1 - K_0) \times A$$

10-1. JOINT

CITY MULTI indoor units can be easily connected by using Joint sets and Header sets provided by Mitsubishi Electric. One kind of Joint sets are available for use. Refer to section "Piping Design" or the Installation Manual that comes with the Joint set for how to install the Joint set.

CMY-Y62-G

1. Specification

Items		Details
Main	Number of ports	2 ports
	Number of branch joints	One for each liquid and gas pipe
	Pipe material	Phosphorus deoxidized copper C1220T-OL (JIS H3300)
Accessory	Insulation material	Foamed polyethylene (one for each liquid and gas pipe)
	Reducer	10 reducers of 7 types (Refer to the external drawing for details.)

2. External drawing

For liquid pipe:

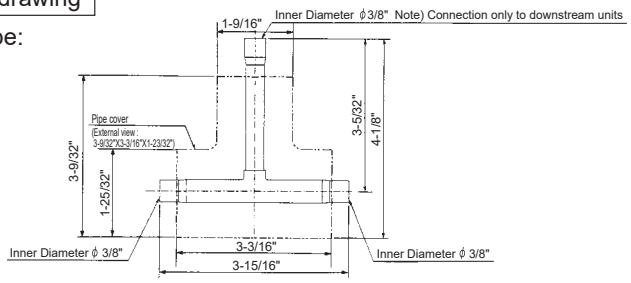

Reducer (Accessory):

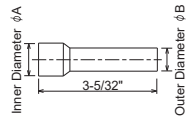

A (Inner Diameter)	B (Outer Diameter)	Number of reducers
ϕ 1/2"	ϕ 3/8"	2
ϕ 3/4"	ϕ 5/8"	1
ϕ 7/8"	ϕ 3/4"	1

For gas pipe:

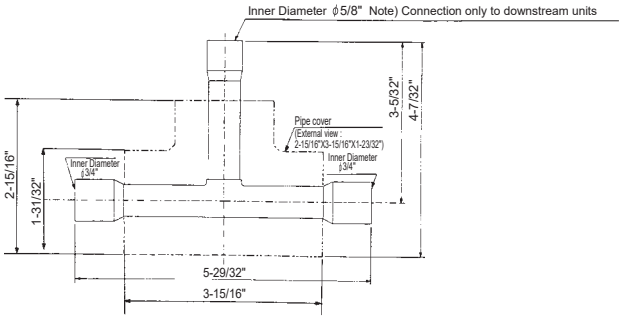

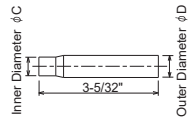

C (Inner Diameter)	D (Outer Diameter)	Number of reducers
ϕ 1/4"	ϕ 3/8"	2
ϕ 1/2"	ϕ 5/8"	1
ϕ 1/2"	ϕ 3/4"	1
ϕ 5/8"	ϕ 3/4"	2

10-2. HEADER

CITY MULTI indoor units can be easily connected by using Joint sets and Header sets provided by Mitsubishi Electric. Two kinds of Header sets are available for use. Refer to section "Piping Design" or the Installation Manual that comes with the Header set for how to install the Header set.

CMY-Y64-G

1. Specification

Items		Details
Main	Number of ports	3 ~ 4 ports
	Number of branch joints	One for each liquid and gas pipe
	Pipe material	Phosphorus deoxidized copper C1220T-OL (JIS H3300)
Accessory	Insulation material	Foamed polyethylene
	Reducer	7 reducers of 5 types
	Cap	2 caps of 2 different types for each liquid and gas pipe ; 4 caps in total

2. External drawing

For liquid pipe:

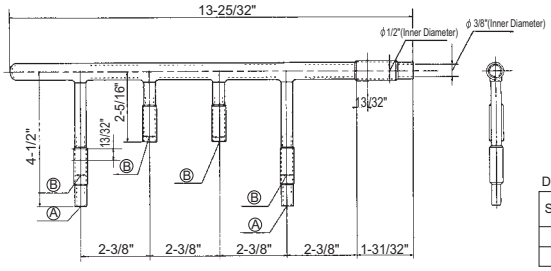

Dimension table

Symbol	Inner Diameter (mm)
Ⓐ	ϕ 1/4"
Ⓑ	ϕ 3/8"

For gas pipe:

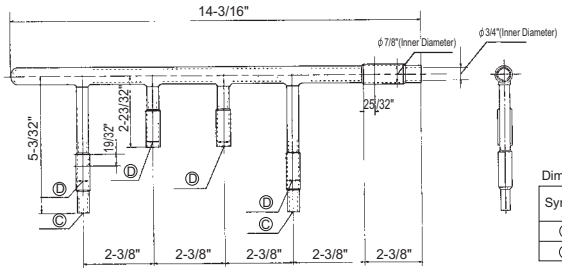

Dimension table

Symbol	Inner Diameter (mm)
Ⓒ	ϕ 1/2"
Ⓓ	ϕ 5/8"

Reducer (Accessory):

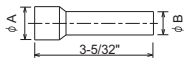

A (Inner Diameter)	B (Outer Diameter)	Number of reducers
ϕ 3/4"	ϕ 5/8"	1
ϕ 5/8"	ϕ 1/2"	2
ϕ 3/8"	ϕ 1/4"	2

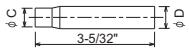

C (Inner Diameter)	D (Outer Diameter)	Number of reducers
ϕ 5/8"	ϕ 3/4"	1
ϕ 3/8"	ϕ 1/2"	1

CMY-Y68-G

1. Specification

Items		Details
Main	Number of ports	5 ~ 8 ports
	Number of branch joints	One for each liquid and gas pipe
	Pipe material	Phosphorus deoxidized copper C1220T-OL (JIS H3300)
Accessory	Insulation material	Foamed polyethylene
	Reducer	3 reducers of 3 types
	Cap	3 caps for each liquid and gas pipe ; 6 in total

2. External drawing

For liquid pipe:

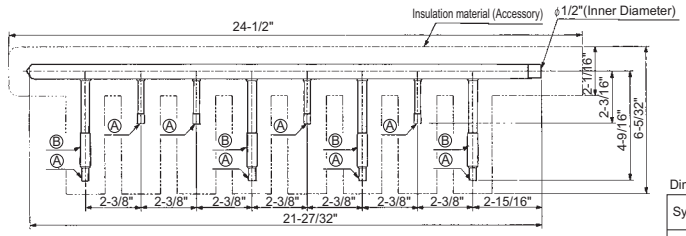

Dimension table

Symbol	Inner Diameter (mm)
Ⓐ	ϕ 1/4"
Ⓑ	ϕ 3/8"

For gas pipe:

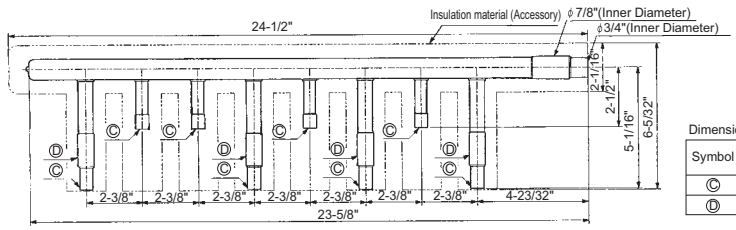

Dimension table

Symbol	Inner Diameter (mm)
Ⓒ	ϕ 1/2"
Ⓓ	ϕ 5/8"

Reducer (Accessory):

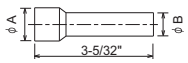

A (Inner Diameter)	B (Outer Diameter)	Number of reducers
ϕ 3/4"	ϕ 5/8"	1
ϕ 1/2"	ϕ 3/8"	1

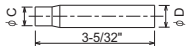

C (Inner Diameter)	D (Outer Diameter)	Number of reducers
ϕ 5/8"	ϕ 3/4"	1

11-1. General cautions

① Follow ordinance of your governmental organization for technical standard related to electrical equipment, wiring regulations, and guidance of each electric power company.

② Wiring for control (hereinafter referred to as transmission cable) shall be (50mm[1-5/8in] or more) apart from power source wiring so that it is not influenced by electric noise from power source wiring. (Do not insert transmission cable and power source wire in the same conduit.)

③ Be sure to provide designated grounding work to outdoor unit.

④ Give some allowance to wiring for electrical part box of indoor and outdoor units, because the box is sometimes removed at the time of service work.

⑤ Never connect 100V, 208~230V power source to terminal block of transmission cable. If connected, electrical parts will be damaged.

⑥ Use 2-core shield cable for transmission cable. If transmission cables of different systems are wired with the same multiplecore cable, the resultant poor transmitting and receiving will cause erroneous operations.

⑦ When extending the transmission line, make sure to extend the shield cable as well.

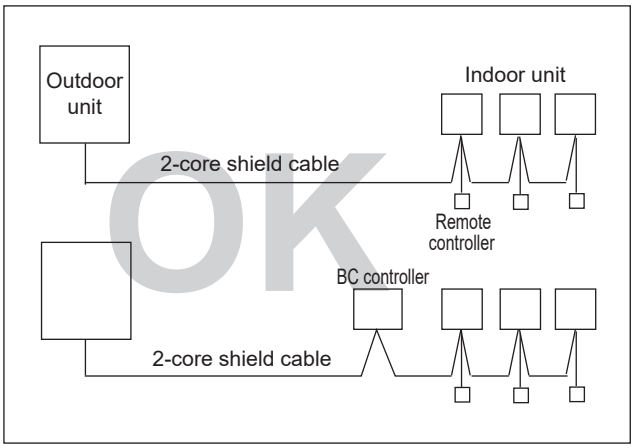

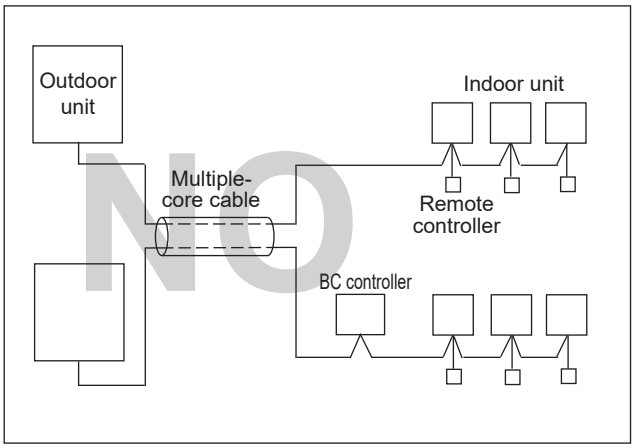

11-2. Power cable specifications

Thickness of Wire for Main Power Supply and On/Off Capacities

<When power is supplied separately>

Model		Power Supply	Minimum Wire Thickness (mm^2 [AWG])		Conduit size	Breaker for Wiring*1	Breaker for Current Leakage (if you use)	Minimum circuit ampacity	Maximum rating of over current protector device
			Main cable *2	Ground					
Outdoor Unit	36/48NL	208/230 VAC, 60 Hz	5.3 [AWG10]	5.3 [AWG10]	1 *3	30 A	30 A 30 mA 0.1sec. or less	36 A	64 A
	36/42/48NLHZ		8.4 [AWG8]	8.4 [AWG8]	1 *3	40 A	40 A 30 mA 0.1sec. or less	45 A	80 A
	60NL		8.4 [AWG8]	8.4 [AWG8]	1 *3	40 A	40 A 30 mA 0.1sec. or less	45 A	80 A
	60NLHZ		13.3 [AWG6]	13.3 [AWG6]	1	45 A	45 A 30 mA 0.1sec. or less	45 A	80 A
	SM72TL		8.4 [AWG8]	8.4 [AWG8]	1-1/4 *3	40 A	40 A 30 mA 0.1 sec. or less	32 A	57 A
	SM96TL		8.4 [AWG8]	8.4 [AWG8]	1-1/4 *3	40 A	40 A 30 mA 0.1 sec. or less	46 A	82 A
	SM120TL		13.3 [AWG6]	13.3 [AWG6]	1-1/4 *3	50 A	50 A 30 mA 0.1 sec. or less	49 A	88 A
Branch Box			Refer to installation manual of indoor unit.						

<When power is supplied from the outdoor unit>

Model		Power Supply	Minimum Wire Thickness (mm^2 [AWG])		Conduit size	Breaker for Wiring*1	Breaker for Current Leakage (if you use)	Minimum circuit ampacity	Maximum rating of over current protector device
			Main cable *2	Ground					
Outdoor Unit	36/48NL	208/230 VAC, 60 Hz	8.4 [AWG8]	8.4 [AWG8]	1 *3	40 A	40 A 30 mA 0.1sec. or less	42 A	70 A
	36/42/48NLHZ		13.3 [AWG6]	13.3 [AWG6]	1	45 A	45 A 30 mA 0.1sec. or less	51 A	86 A
	60NL		13.3 [AWG6]	13.3 [AWG6]	1	50 A	50 A 30 mA 0.1sec. or less	55 A	90 A
	60NLHZ		13.3 [AWG6]	13.3 [AWG6]	1	55 A	55 A 30 mA 0.1sec. or less	55 A	90 A
	SM72TL		21.2 [AWG4]	21.2 [AWG4]	1-1/4	60 A	60 A 30 mA 0.1 sec. or less	50 A	75 A
	SM96TL		21.2 [AWG4]	21.2 [AWG4]	1-1/4	60 A	60 A 30 mA 0.1 sec. or less	64 A	100 A
	SM120TL		21.2 [AWG4]	21.2 [AWG4]	1-1/4	70 A	70 A 30 mA 0.1 sec. or less	67 A	106 A
Branch Box			Refer to installation manual of indoor unit.						

*1 Please follow applicable federal, state, or local codes to prevent potential leakage/electric shock. Or install a ground fault interrupt for the prevention of leakage and electric shock.

IMPORTANT

If a current leakage breaker is used, it should be compatible with higher harmonics as this unit is equipped with an inverter. The use of an inadequate breaker can cause the incorrect operation of inverter.

***2 Use copper supply wires. Use the electric wires over the rating voltage 300 V.**

*3 Although the conduit size is larger than the size specified for the wire thickness according to UL standards, use a conduit size of 1 inch.

Total operating current of the indoor unit	Minimum Wire Thickness (mm^2 [AWG])			Ground-fault interrupter *1 (if you use)	Local switch (A)		Breaker for wiring (NFB)
	Main cable	Branch	Ground		Capacity	Fuse	
F0 = 15 or less *2	2.1/14	2.1/14	2.1/14	15A current sensitivity *3	15	15	15
F0 = 20 or less *2	3.3/12	3.3/12	3.3/12	20A current sensitivity *3	20	20	20
F0 = 30 or less *2	5.3/10	5.3/10	5.3/10	30A current sensitivity *3	30	30	30

Apply to IEC61000-3-3 about max. permissive system impedance.

*1 The Ground-fault interrupter should support inverter circuit.
The Ground-fault interrupter should combine using of local switch or wiring breaker.

*2 Please take the larger of F1 or F2 as the value for F0.

F1 = Total operating maximum current of the indoor units × 1.2

F2 = {V1 × (Quantity of Type1)/C} + {V1 × (Quantity of Type2)/C} + {V1 × (Quantity of Type3)/C} + {V1 × (Quantity of Type4)/C} +...+ {V1 × (Quantity of Type13)/C}

Indoor unit		V1	V2
Type 1	PEAD-AA*NL	30.5	2.4
Type 2	SVZ-AP*NL, PAA-AA/BA/CA*NL	26.9	
Type 3	SEZ-AD*NL	18.6	3.4
Type 4	SLZ-AF*NL	17.1	2.4
Type 5	MLZ-KX06NL, MSZ-FX*NL, MSZ-GX*NL, MFZ-KX*NL, MSZ-EX*NL2	7.4	
Type 6	Branch box	5.1	3.0
Type 7	PVFY-L*NAMU	38.0	1.6
Type 8	PEFY-M15/18/24/27/30/36/48/54NMHU	31.4	2.4
Type 9	PEFY-M72/96NMHU	23.0	4.8
Type 10	PEFY-L/M*NMAU	30.5	2.3
Type 11	PLA-AE*NL, PCFY-L/M*NKMU, PLFY-EL/EM*NEMU, PLFY-L/M*NFMU, PKFY-L/M*NKMU, PKFY-L/M*NLMU, PMFY-M*NCMU	19.8	2.4
Type 12	PEFY-L/M*NMSU	18.6	
Type 13	MLZ-KX09/12/18NL	9.9	
Type 14	CMR-M100KT*-NA	5.8	0.6
Type 15	PVFY-M08/12/18/24/30/36/48/54NAMU	34.0	2.6
Type 16	PVFY-M60NAMU	26.9	

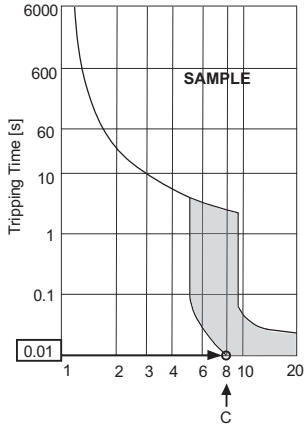

Rated Tripping current (x)
Sample chart

C: Multiple of tripping current at tripping time 0.01s

Please pick up “C” from the tripping characteristic of the breaker.

<Example of “F2” calculation>

* Condition PEFY-NMSU × 4 + PEFY-NMAU × 1, C = 8 (refer to right sample chart)

F2 = 18.6 × 4/8 + 30.5 × 1/8
= 13.11
→16 A breaker (Tripping current = 8 × 16 A at 0.01 s)

*3 Current sensitivity is calculated using the following formula.

G1 = V2 × (Quantity of Type1) + V2 × (Quantity of Type2) + V2 × (Quantity of Type3) +...+ V2 × (Quantity of Type13)
+ V3 × (Wire length [km])

G1	Current sensitivity
30 or less	30 mA 0.1sec or less
100 or less	100 mA 0.1sec or less

Wire thickness (mm^2/AWG)	V3
2.1/14	48
3.3/12	56
5.3/10	66

1. **Use a separate power supply for the outdoor unit and indoor unit.**
2. **Bear in mind ambient conditions (ambient temperature, direct sunlight, rain water, etc.) when proceeding with the wiring and connections.**
3. **The wire size is the minimum value for metal conduit wiring. The power cord size should be 1 rank thicker consideration of voltage drops. Make sure the power-supply voltage does not drop more than 10%.**
4. **Specific wiring requirements should adhere to the wiring regulations of the region.**
5. **Power supply cords of parts of appliances for outdoor use shall not be lighter than polychloroprene sheathed flexible cord (design 60245 IEC57). For example, use wiring such as YZW.**
6. **Install an earth longer than other cables.**

⚠WARNING

- **Be sure to use specified wires to connect so that no external force is imparted to terminal connections. If connections are not fixed firmly, it may cause heating or fire.**
- **Be sure to use the appropriate type of overcurrent protection switch. Note that generated overcurrent may include some amount of direct current.**
- **Turn on main power when the ambient temperature is -20 °C (-4 °F) or higher.**
- **In below -20 °C (-4 °F), it needs at least 12hr stand by before the units operate in order to warm the electrical parts.**

⚠CAUTION

- **Some installation site may require attachment of an earth leakage breaker. If no earth leakage breaker is installed, it may cause an electric shock.**
- **Do not use anything other than breaker and fuse with correct capacity. Using fuse and wire or copper wire with too large capacity may cause a malfunction of unit or fire.**

IMPORTANT

Make sure that the current leakage breaker is one compatible with higher harmonics.
Always use a current leakage breaker that is compatible with higher harmonics as this unit is equipped with an inverter.
The use of an inadequate breaker can cause the incorrect operation of inverter.

Never splice the power cable or the indoor-outdoor connection cable, otherwise it may result in a smoke, a fire or communication failure.

11-3. Power supply examples

MXZ-SM36, 48, 60NL-U1
MXZ-SM36, 42, 48, 60NLHZ-U1

The local standards and/or regualtions is applicable at a higher priority.

■ **Without a branch box**

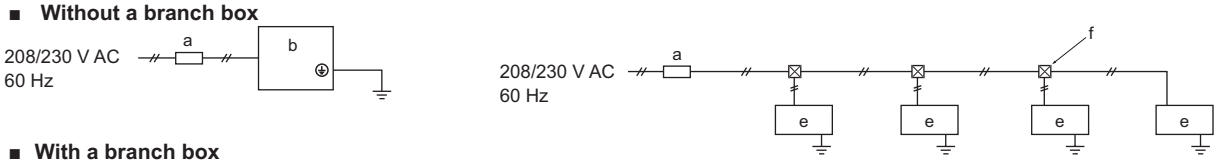

■ **With a branch box**

When power is supplied from an outdoor unit

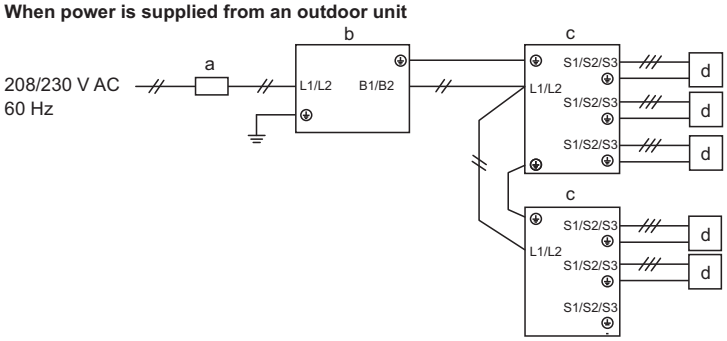

When power is supplied separately

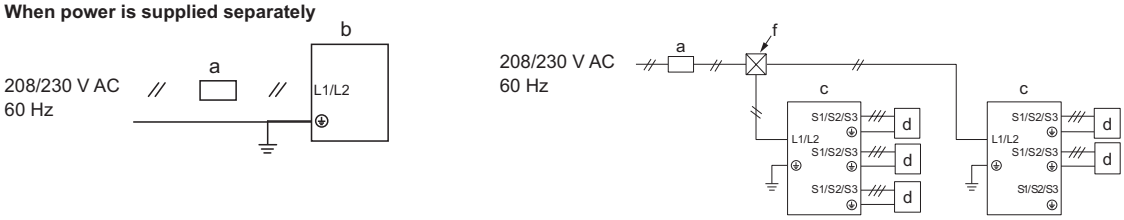

a. Switch (Ground fault circuit interrupter)
b. Outdoor unit
c. Branch box
d. A-Control indoor unit (M, S, P series indoor unit)
e. City multi series indoor unit
f. Pull box

Note:
- A separate power supply is required for the City Multi indoor unit, as it cannot be powered by an outdoor unit.

MXZ-SM72, 96, 120TL-U1

The local standards and/or regualtions is applicable at a higher priority.

■ **Without a branch box**

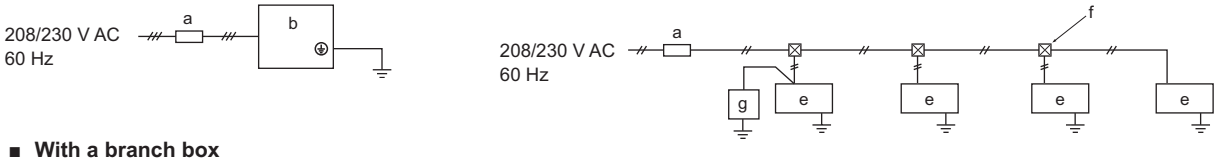

■ **With a branch box**

When power is supplied from an outdoor unit

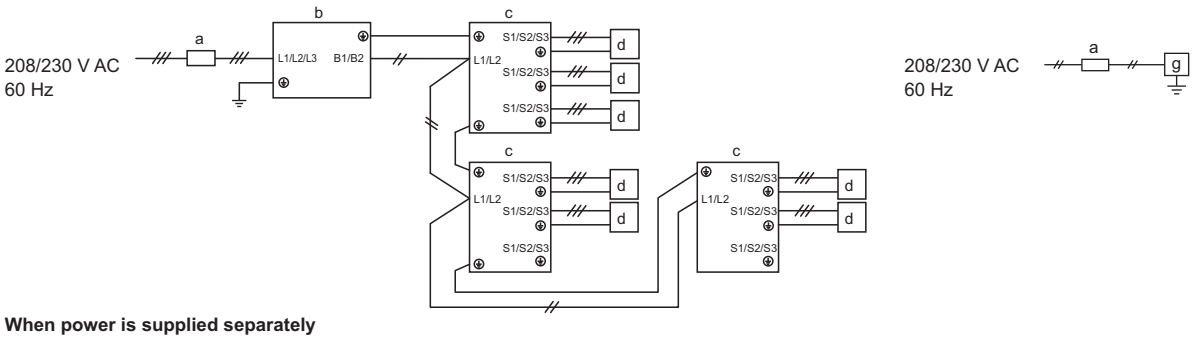

When power is supplied separately

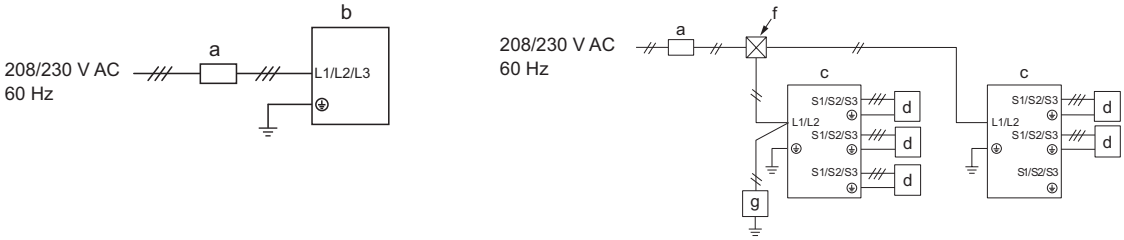

a. Switch (Ground fault circuit interrupter)
b. Outdoor unit
c. Branch box
d. A-Control indoor unit (M, S, P series indoor unit)
e. City multi series indoor unit
f. Pull box
g. Shut off valve kit

Note:
- A separate power supply is required for the City Multi indoor unit, as it cannot be powered by an outdoor unit.
- A separate power supply is required for the shut off valve kit, as it cannot be powered by an outdoor unit.

12-1. Transmission cable length limitation

12-1-1. Group operation system with 2 or more OCs and MA-RC

Wiring methods for the operation example shown below

- Always use shielded wires when making connections between OC and M-IC, OC and OC, or M-IC and M-IC wiring.
- Use feed wiring to connect the terminals M1, M2, and S on TB3 of OC to the terminals M1, M2, and S on TB5 of M-IC.
- Connect the terminals 1 and 2 on TB15 of M-IC to the terminal block on the MA-RC. Use non-polarized 2-core wires.
- Connect the terminals M1, M2, and S on TB7 of each OC.
- Do not change the jumper connector CN41 on the outdoor multi controller circuit board.
- Grounding with the terminal S on TB7 is unnecessary. Connect the terminal S on the power supply unit to ground.
- Address settings (on the outdoor unit PCB) are required.

Permissible length

Section	Length	Diameter
Maximum line length via OC (*L1+L2+L3+L4*, *L1+L2+L5+L6*)	≤ 1640 ft [500 m]	AWG 16 [1.25 mm²] or more
Maximum length between M-IC and OC (*L1*, *L3+L4*, *L2+L5*, *L6*)	≤ 656 ft [200 m]	AWG 16 [1.25 mm²] or more

Address setting on PCB

Unit	Range	Remarks
Main M-IC	001 to 050	Use the smallest address in the M-ICs in the same group.
Sub M-IC	001 to 050	The address must be in sequence with the main M-IC address.
OC	051 to 100	Add 50 to the smallest M-IC address. The address is automatically set to “100” if "01–50” is entered.
SVK	000, 151 to 200	To set the address to 151 to 199, set the displayed value to 51 to 99 (subtract 100 from the desired address.). To set the address to 200, set the displayed value to 50.
MA-RC	-	Address setting is not necessary.

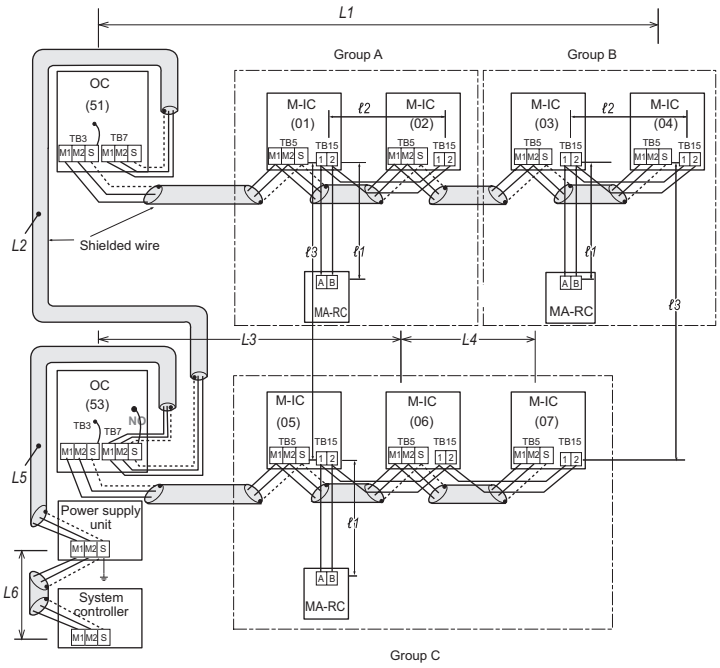

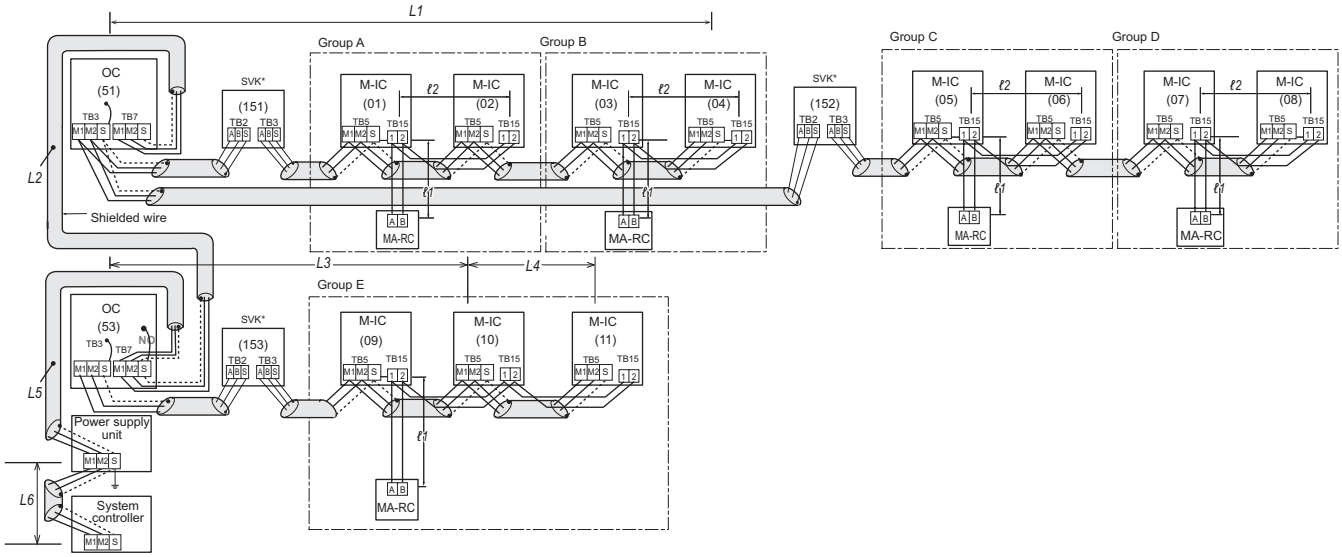

12-1-2. Operation system with BC and A-IC

Wiring methods for the operation example shown below

- Always use shielded wire when making connections between OC and BC or OC and OC wiring.
- Use feed wiring to connect the terminals M1, M2, and S on TB3 of OC to the terminals M1, M2, and S on TB5 of BC.
- Connect the terminals 1 and 2 on TB5/TB15 of A-IC to the terminal block on the MA-RC. Use non-polarized 2-core wires.
- Connect the terminals M1, M2, and S on TB7 of each OC.
- Do not change the jumper connector CN41 on the outdoor multi controller circuit board.
- Grounding with the terminal S on TB7 is unnecessary. Connect the terminal S on the power supply unit to ground.
- Address settings (on the outdoor unit PCB) are required.

Permissible length

Section	Length	Diameter
Maximum line length via OC (*L1+L2+L3+L4+L5*)	≤ 1640 ft [500 m]	AWG 16 [1.25 mm²] or more
Maximum length between BC and OC (*L1+L2*, *L3+L4*, *L5*)	≤ 656 ft [200 m]	AWG 16 [1.25 mm²] or more
Maximum length between BC and A-IC (*L6*)	≤ 82 ft [25 m]	AWG 16 [1.25 mm²]
Length between A-IC and remote controller (*ℓ1*)	≤ 656 ft [200 m]	AWG 22 to AWG 16 [0.3 to 1.25 mm²]*

Address setting on PCB

Unit	Range	Remarks
BC	001 to 050	Decide the BC address so that the address of the port does not exceed 50.
A-IC (Ports on BC)	001 to 050	Set addresses to the ports on BC where an A-IC is connected. The address of the first port is the same as that of BC, and the addresses of the other ports are set in sequence. For example, when 5 A-ICs are connected and the BC address (the first port address) is set to 01, the other port addresses are 02, 03, 04, and 05.
OC	051 to 100	Add 50 to the BC address. The address is automatically set to “100” if "01–50” is entered.
SVK	151 to 200	To set the address to 151 to 199, set the displayed value to 51 to 99 (subtract 100 from the desired address.). To set the address to 200, set the displayed value to 50.
MA-RC	-	Address setting is not necessary.

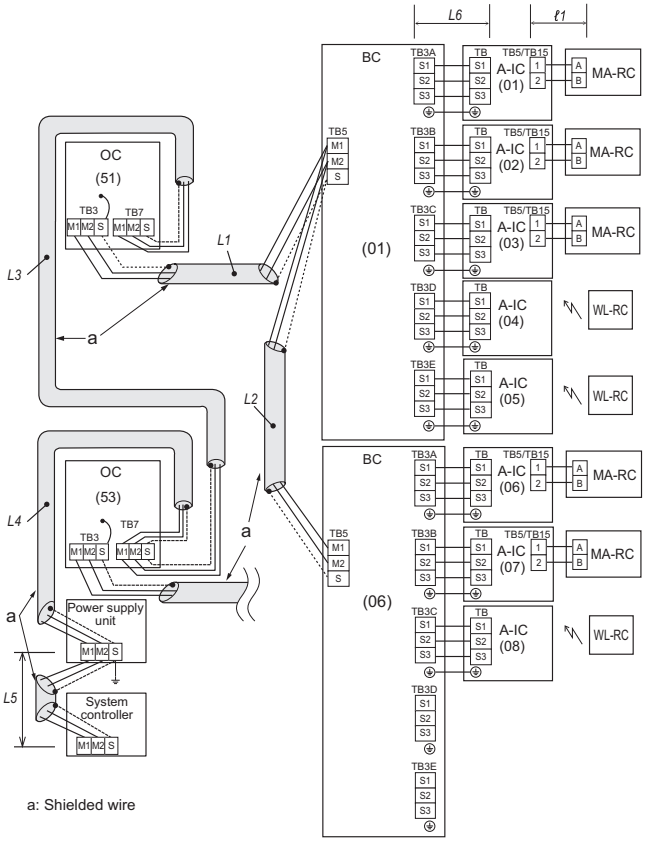

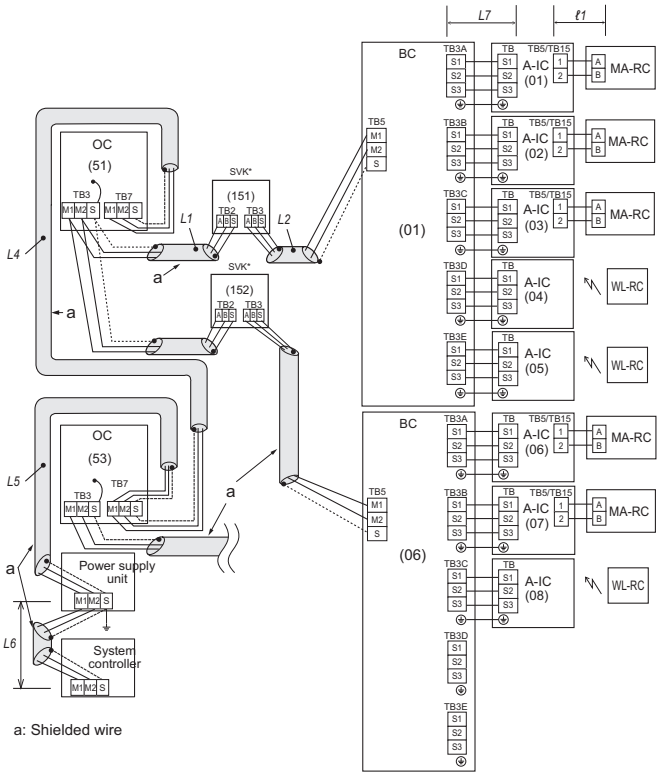

Note:

- Different refrigerant systems cannot be connected together.

12-2. Transmission cable specifications

	Transmission cables (Li)	MA Remote controller cables
Type of cable	Shielding wire (2-core) CVVS, CPEVS or MVVS	Sheathed 2-core cable (unshielded) CVV
Cable size	More than 1.25mm^2 [AWG16]	0.3 ~1.25mm^2 [AWG22~16]*1
Remarks	—	Max length : 200m [656ft]

*1 To wire PAR-CT01MAU, PAR-43MAAUB, and PAC-YT53CRAU, use a wire with a diameter of 0.3 mm^2 [AWG22]

CVVS, MVVS: PVC insulated PVC sheathed shielded control cable
CPEVS: PE insulated PVC sheathed shielded communication cable
CVV: PVC insulated PVC sheathed control cable

12-3. System configuration restrictions

12-3-1. Common restrictions for the CITY MULTI indoor unit system

For each Outdoor/Heat source unit, the maximum connectable quantity of Indoor unit is specified at its Specifications table.

A) 1 Group of Indoor units can have 1-16 Indoor units;
B) Maximum 2 remote controllers for 1 group;
*When a PAR-CT01MAU or PAR-43MAAUB is connected to a group, no other MA remote controllers can be connected to the same group.
*To wire PAR-CT01MAU, PAR-43MAAUB, and PAC-YT53CRAU, use a wire with a size of 0.3 mm^2 [AWG22].
C) 1 Lossnay unit can interlock maximum 16 Indoor units; 1 Indoor unit can interlock only 1 Lossnay unit.
D) Maximum 3 System controllers are connectable when connecting to TB3 of the Outdoor/Heat source unit.
E) A maximum of 6 system controller are connectable to TB3 and TB7 of Outdoor/Heat source unit.
F) 4 System controllers or more are connectable when connecting to TB7 of the Outdoor/Heat source unit, if the transmission power is supplied by the power supply unit PAC-SC51KUA.
*System controller connected as described in D) would have a risk that the failure of connected Outdoor/Heat source unit would stop power supply to the System controller.
G) Wireless remote controller (PAR-FL32MA-E) and wired MA remote controllers (PAR-CT01MAU, PAR-43MAAUB, and PAC-YT53CRAU) cannot be used together within the same group that includes multiple indoor units.

12-3-2. Ensuring proper communication power and the number of connected units for M-NET

In order to ensure proper communication among Outdoor/Heat source unit, Indoor unit, and Controllers, the transmission power situation for the M-NET should be observed. In some cases, Transmission booster should be used.
Taking the power consumption of Indoor unit as 1, the equivalent power consumption or supply of others are listed at Table 1 and Table 2.
Both the transmission line for centralized controller and indoor-outdoor transmission line must meet the conditions listed below. (Both conditions a) and b) must be met.)

a) [Total equivalent power consumption] ≤ [The equivalent power supply]
b) [Total equivalent number of units (Table1)] ≤ [40]

Table 1 The equivalent power consumption and the equivalent number of units

Category	Model	The equivalent power consumption	The equivalent number of units
Indoor unit	Sized 05-96	1	1
MA remote controller/Lossnay	PAR-CT01MAU PAR-42MAAUB PAC-YT53CRAU PAR-FA32MA 20MA	0	0
System controller	AE-C400A EW-C50A TE-C400A TW-C50A	0	0
MN converter	CMS-MNG-E	2	1
Outdoor/Heat source unit	TB7 power consumption	0	0
System control interface	MAC-333IF-E	0	0
Power Supply Interface for Alarm kit	PAC-IF55AL-E	0.75	1
M-NET Branch box	PAC-LMA30/50BC	7 (when more than one indoor unit is connected: 1.5)	6
Shut off valve kit	CMR-M100KT*-NA	0.75	1

Table 2 The equivalent power supply

Category	Model	The equivalent power supply		
Transmission Booster	PAC-SF46EPA-G	25 *1		
Power supply unit	PAC-SC51KUA	5		
System controller	AE-C400A EW-C50A TE-C400A TW-C50A	0.75		
M-NET Branch box	PAC-LMA30/50BC	0		
Outdoor/Heat source unit		TB3 and TB7 total	TB7 only	TB3 only
	Outdoor unit other than the following units *2	32 *1	6	32*1 - equivalent power supplied to TB7
	S-Series outdoor unit	12 *1	0	12 *1
	TLMU/TKMU outdoor unit	32 *1	-	32 *1

*1 When one or more indoor units listed below is connected, subtract 3 from the equivalent power supply.

Table 3

Category	Model
Indoor unit	Sized 72, 96

*2 If PAC-SC51KUA is used to supply power at TB7 side, no power supply need from Outdoor/Heat source unit at TB7, Connector TB3 itself will therefore have 32.

With the equivalent power consumption values and the equivalent number of units in Table 1 and Table 2, PAC-SF46EPA-G can be designed into the air-conditioner system to ensure proper system communication according to (A), (B), (C).

(A) Firstly, start counting from TB3 side at TB3 to count the total equivalent number of units of indoor units, ME remote controller, and System controllers at TB3. Set a PAC-SF46EPA-G when the total equivalent number of units reaches 40.

(B) Secondly, count from TB7 side to TB3 side the total transmission power consumption. If the total equivalent power supply reaches 32, a PAC-SF46EPA-G should be set. However, if a controller with a built-in power supply, such as a PAC-SC51KUA, is used to supply power at TB7 side, count from TB3 side only.

(C) Finally, count from TB7 at TB7 side the total transmission power consumption, If the total equivalent power supply for only TB7 reaches 6, a PAC-SF46EPA-G should be set. Also, count from TB7 at TB7 side the total equivalent number of units of System controllers, and so on. If the total equivalent number of units reaches 40, a PAC-SF46EPA-G should be set.

* The equivalent power supply of S-Series outdoor unit is 12.
* When one or more indoor units listed in Table 3 is connected, subtract 3 from the equivalent power supply.

■ System example

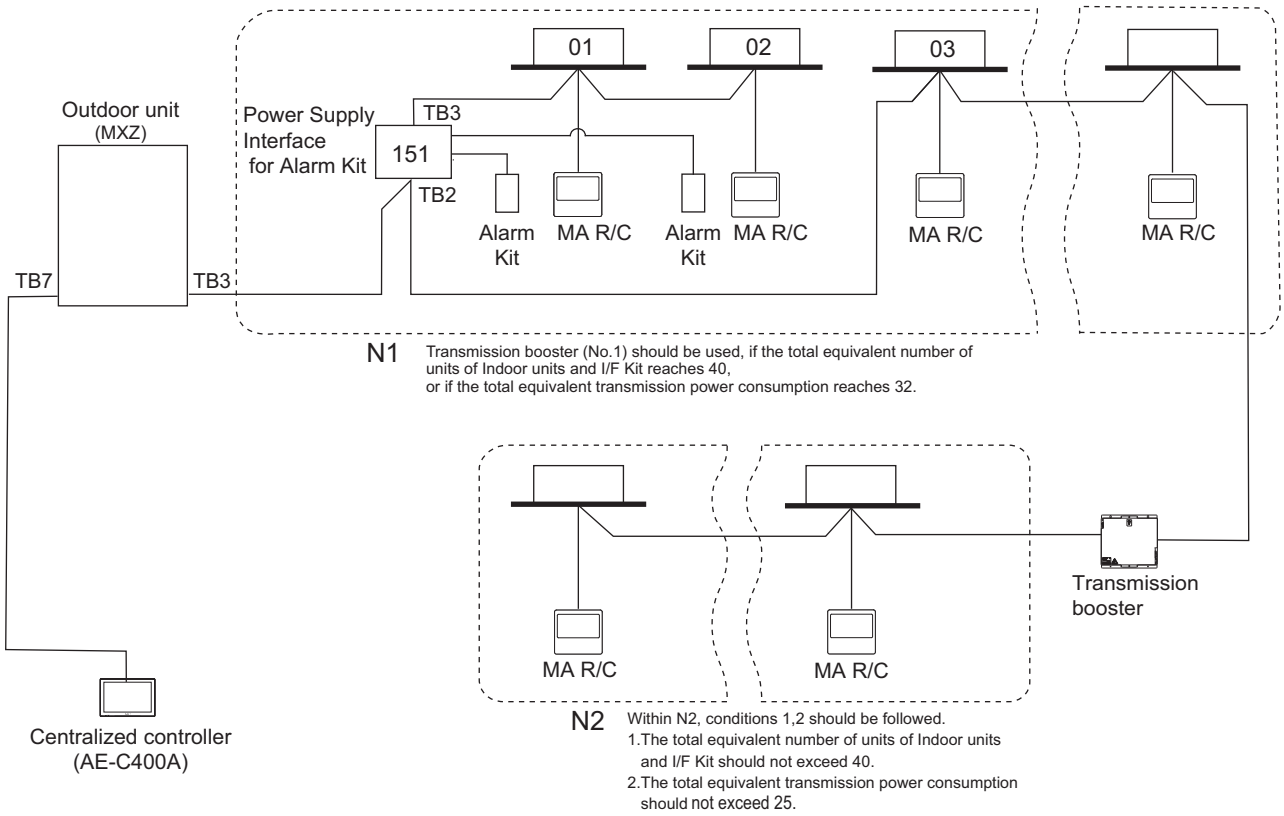

12-3-3. Ensuring proper power supply to System controller

System controllers (AE-C400A, EW-C50A, TE-C400A, TW-C50A) have a built-in function to supply power to the M-NET transmission lines, so no power needs to be supplied to the M-NET transmission lines from the Outdoor/Heat source units or from PAC-SC51KUA.

⚠ CAUTION

■How to connect system controllers (AE-C400A, EW-C50A, TE-C400A, TW-C50A) to a given system

System controllers (AE-C400A, EW-C50A, TE-C400A, TW-C50A) have a built-in function to supply power to the M-NET transmission lines, so no power needs to be supplied to the M-NET transmission lines from the Outdoor/Heat source units or from PAC-SC51KUA.
Leave the power supply connector on the Outdoor/Heat source unit connected to CN41 as it is.

12-3-4. Power supply to AE-C400A/EW-C50A/TE-C400A/TW-C50A

1-phase 100-240VAC power supply is needed.
The power supply unit PAC-SC51KUA is not necessary when connecting only the AE-200A/AE-50A/EW-50A.

12-3-5. Power supply to Power Supply Interface for Alarm Kit

1-phase 208-230VAC power supply is needed.
Up to 8 indoor units can be connected under Power Supply Interface for Alarm Kit.

12-3-6. Power supply to Power Supply Shut off valve kit

1-phase 208-230VAC power supply is needed.
Up to 8 indoor units can be connected under Power Supply Shut off valve kit.

12-4. Address setting

12-4-1. Switch operation

In order to constitute CITY MULTI indoor units in a complete system, switch operation for setting the unit address No. and connection No. is required.

Rotary switch	
Branch No. setting	Unit address No. setting
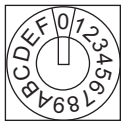	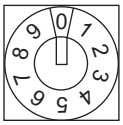 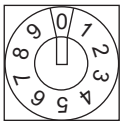

① Address No. of outdoor unit and indoor unit.
The address No. is set at the address setting board.

② Caution for switch operations

- Be sure to shut off power source before switch setting. If operated with power source on, switch can not operate properly.
- No units with identical unit address shall exist in one whole air conditioner system. If set erroneously, the system can not operate.

③ MA remote controller

- When connecting only one remote controller to one group, it is always the main remote controller.
  When connecting two remote controllers to one group, set one remote controller as the main remote controller and the other as the sub remote controller.
- The factory setting is "Main".

PAR-CT01MAU
The MA remote controller does not have the switches listed above.
Refer to the installation manual for the function setting.

PAC-YT53CRAU

Setting the dip switches

There are switches on the back of the top case. Remote controller Main/Sub and other function settings are performed using these switches. Ordinarily, only change the Main/Sub setting of SW1.
(The factory settings are ON for SW1, 3, and 4 and OFF for SW2.)

SW No	SW contents Main	ON	OFF	Comment
1	Remote controller Main/Sub setting	Main	Sub	Set one of the two remote controllers at one group to "ON".
2	Temperature display units setting	Celsius	Fahrenheit	When the temperature is displayed in [Fahrenheit], set to "OFF".
3	Cooling/heating display in AUTO mode	Yes	No	When you do not want to display "Cooling" and "Heating" in the AUTO mode, set to "OFF".
4	Indoor temperature display	Yes	No	When you do not want to display the indoor temperature, set to "OFF".

12-4-2. Rule of setting address

Unit	Address setting	Example	Note
Indoor unit System control interface (MAC-333IF-E)	01 ~ 50	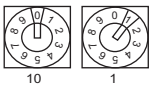	Use the most recent address within the same group of indoor units.
Outdoor unit	51 ~ 99, 100 (Note1)	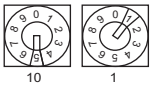	The smallest address of indoor unit in same refrigerant system + 50 Assign sequential address numbers to the outdoor units in one refrigerant circuit system. OC and OS are automatically detected. (Note 2) *Please reset one of them to an address between 51 and 99 when two addresses overlap. *The address automatically becomes "100" if it is set as "01~ 50"
System controller AE-C400A EW-C50A TE-C400A TW-C50A	000, 201 ~ 250	0, 2 (100) 0-5 (10) 0-9 (1)	
M-NET Branch box	01 ~ 50	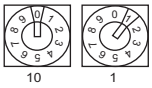	Use the most recent address within the same group of indoor units.
Power Supply Interface for Alarm Kit	151 ~ 199, 200	1 Fixed 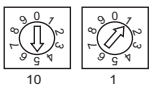	The address automatically becomes "200" if it is set as "50".
Shut off valve kit	151 ~ 200	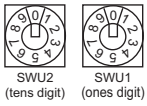	- Assign an unused address within the setting range. - To set the address to 151 to 199, set the displayed value to 51 to 99. (Subtract 100 from the desired address.) Ex. To set the address to 151, set SW12 to 5 and SW11 to 1. To set the address to 170, set SW12 to 7 and SW11 to 0. - To set the address to 200, set the displayed value to 50.

Note1: To set the address to "100", set it to "50"
Note2: Outdoor units OC and OS in one refrigerant circuit system are automatically detected.
OC and OS are ranked in descending order of capacity. If units are the same capacity, they are ranked in ascending order of their address.

12-4-3. System example

Factory setting

Original switch setting of the outdoors, indoors, Power Supply Interface for Alarm Kit at shipment is as follows.

- Outdoor unit : Address: 00, CN41: ON (Jumper), Dip SW5-1: OFF
- Indoor unit : Address: 00
- Power Supply Interface for Alarm Kit : Address: 00

12-4-3-1. Example: Basic

MA R/C: PAR-42MAAUB

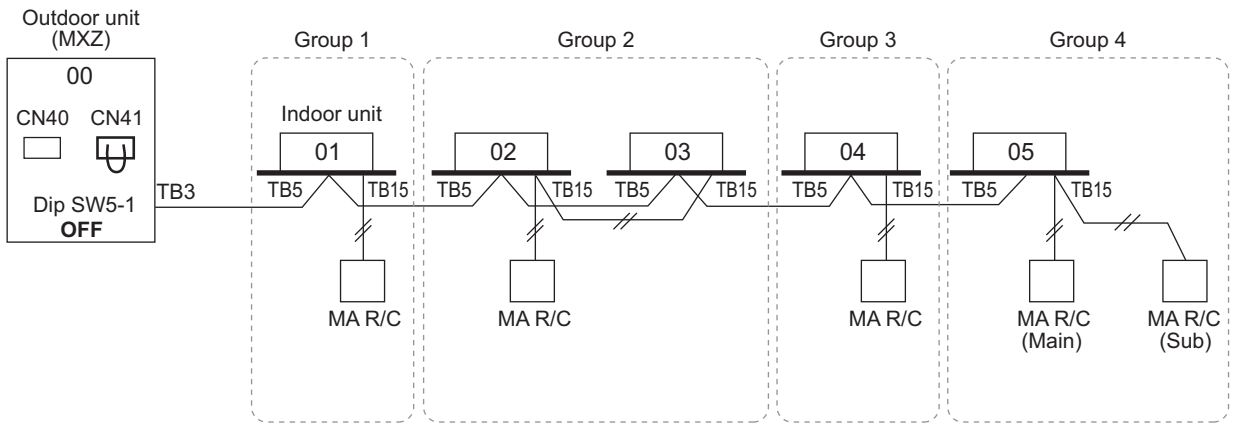

12-4-3-2. Example: AE-C400A, TB7

MA R/C: PAR-42MAAUB

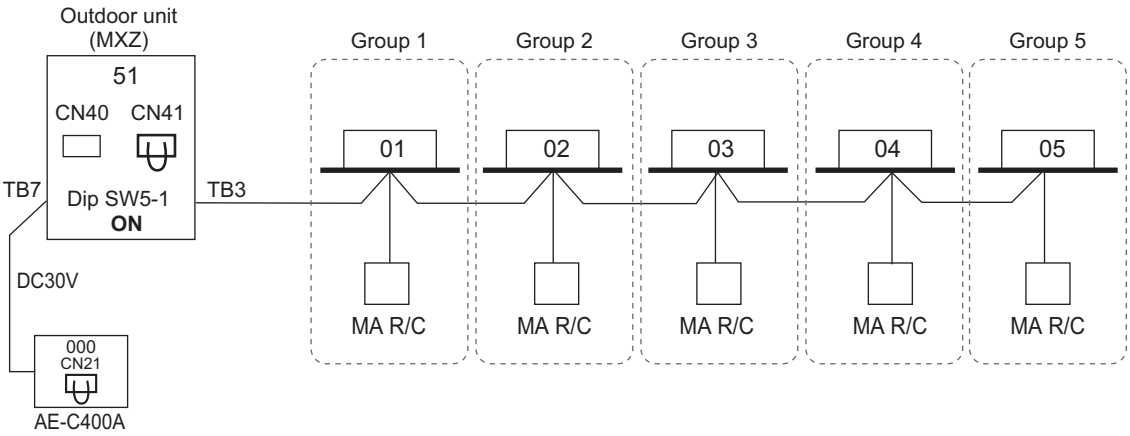

NOTE
- It is necessary to turn on the DipSW 5-1 on the outdoor unit control board when the central controller is connected.

12-4-3-3. Example: 2 Outdoor unit, AE-C400A, MA

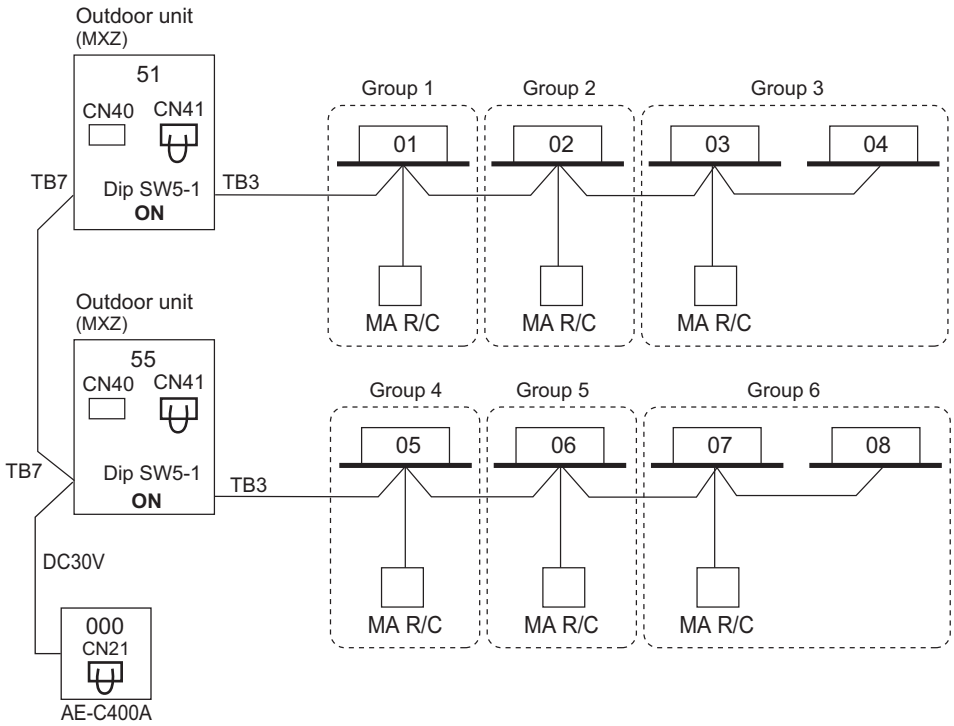

12-4-3-4. AE-C400A+EW-C50A
AE-C400A can control max. 200 indoor units/via EW-C50A.

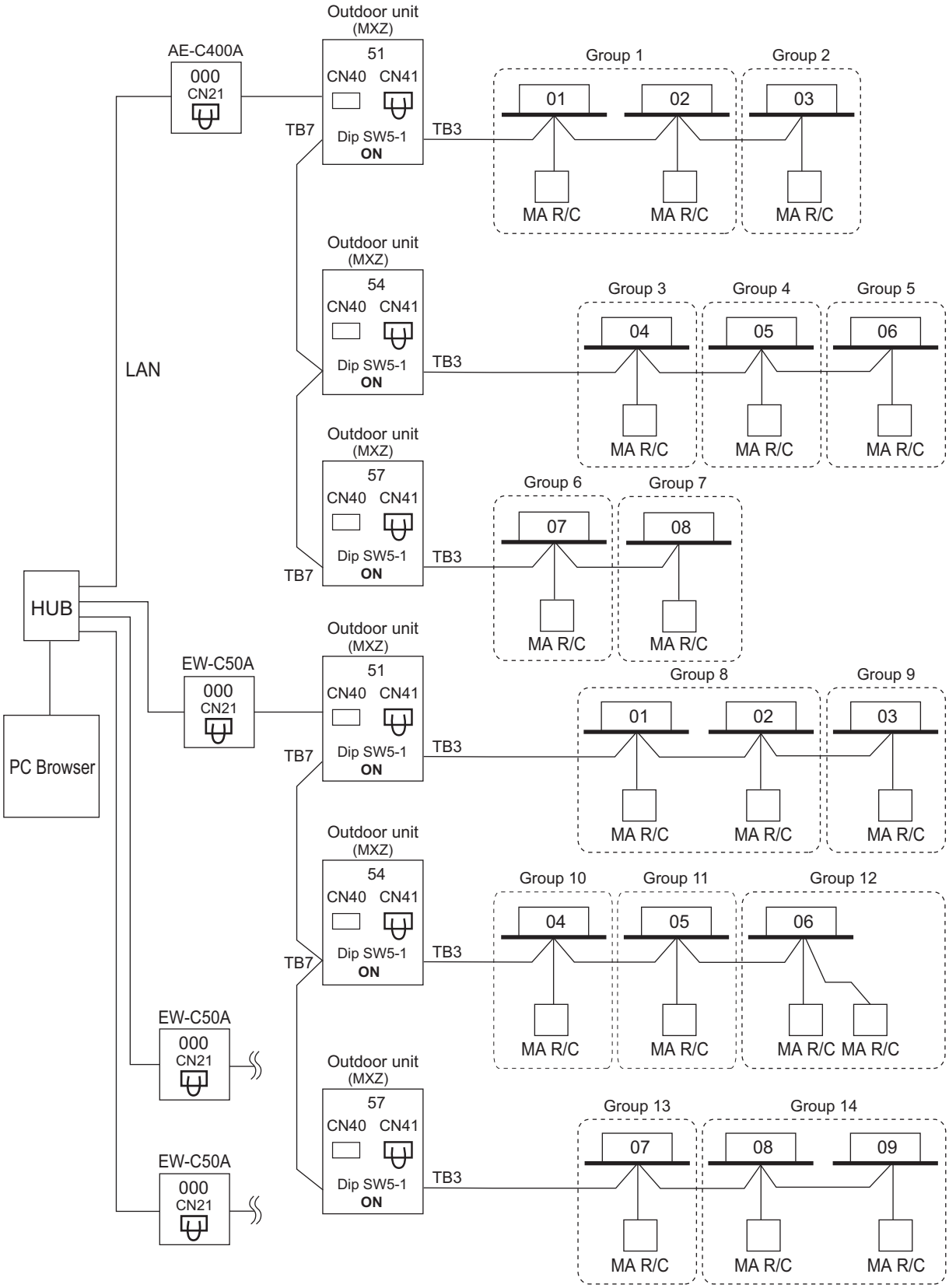

12-4-3-5. Power Supply Interface for Alarm Kit

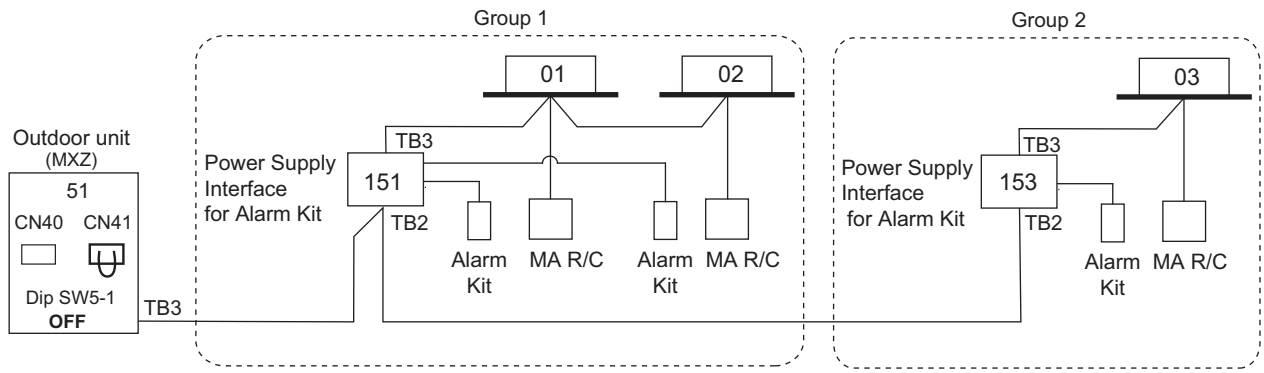

12-4-3-6. Shut off valve kit

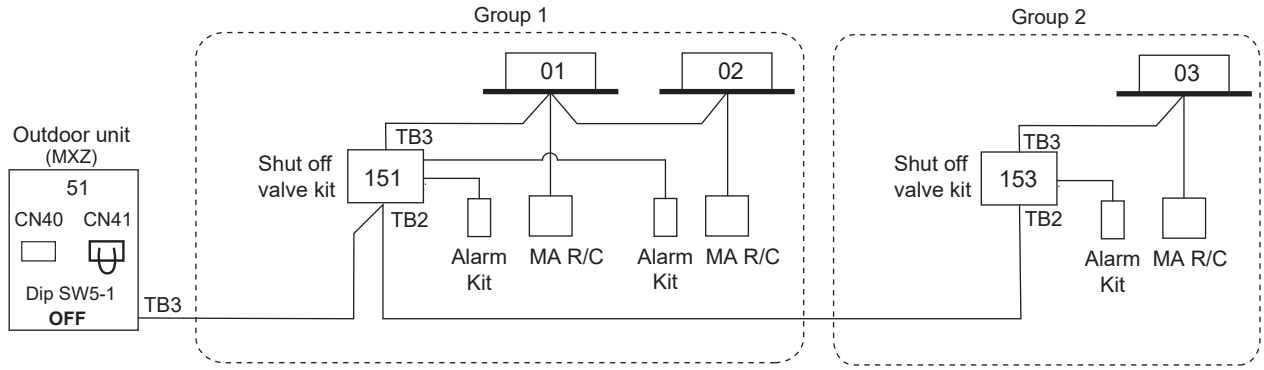

13-1. R454B Piping material

The maximum operation pressure of R454B air conditioner is 4.15 MPa [601 psi]. The refrigerant piping should ensure the safety under the maximum operation pressure. You shall follow the local industrial standard.

13-2. Piping Design

13-2-1. MXZ-SM36/48NL-U1

Line-Branch Method Connection Examples (Connecting to 5 Indoor Units)		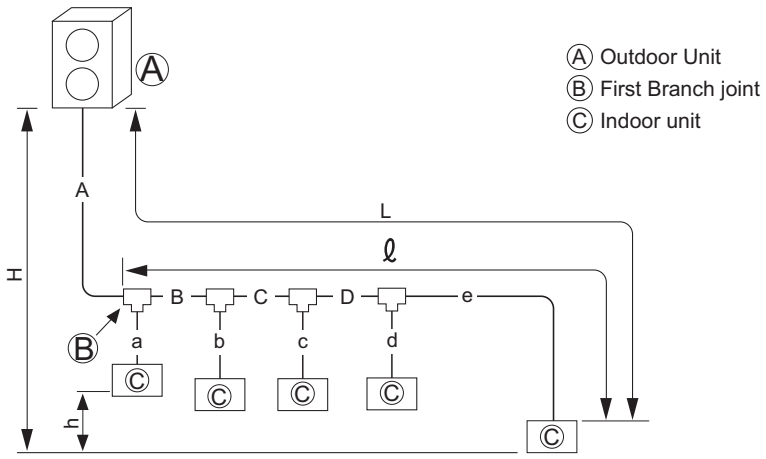
Permissible length	Total piping length	A+B+C+D+a+b+c+d+e ≤ 784 ft [240 m]
	Farthest piping length (L)	A+B+C+D+e ≤ 262 ft [80 m]
	Farthest piping length after first branch (ℓ)	B+C+D+e ≤ 98 ft [30 m]
Permissible height difference	Height sifference between outdoor unit and indoor unit (H)	When the outdoor unit is set higher than indoor units: 164 ft [50 m] When the outdoor unit is set lower than indoor units : 131 ft [40 m] (98 ft [30 m]*) * When PKFY-L04/06/08/12NLMU is included.
	Height difference between indoor units (h)	49 ft [15 m]
■ **Selecting the Refrigerant Branch Kit**		Use an optional branch piping kit (CMY-Y62-G-E).
■ **Select Each Section of Refrigerant Piping** (1) Section From Outdoor Unit to First Branch (A) (2) Sections From Branch to Indoor Unit (a,b,c,d) (3) Section From Branch to Branch (B,C) } Each Section of Piping **Select the size from the table to the right.**		(1) Refrigerant Piping Diameter In Section From Outdoor Unit to First Branch (Outdoor Unit Piping Diameter) Model: MXZ-SM36/48NL Piping Diameter (inch [mm]): Liquid Line 3/8 [ø9.52]; Gas Line 5/8 [ø15.88] (2) Refrigerant Piping Diameter In Section From Branch to Indoor Unit (Indoor Unit Piping Diameter) Model number: 18 or lower — Liquid Line 1/4 [ø6.35]; Gas Line 1/2 [ø12.7] Model number: 24 to 54 — Liquid Line 3/8 [ø9.52]; Gas Line 5/8 [ø15.88] (3) Refrigerant Piping Diameter In Section From Branch to Branch Liquid Line (inch [mm]): 3/8 [ø9.52] Gas Line (inch [mm]): 5/8 [ø15.88]
■ **Additional refrigerant charge**		Refer to “13-3. Refrigerant charging calculation”.

Header-Branch Method
Connection Examples
(Connecting to 6 Indoor Units)

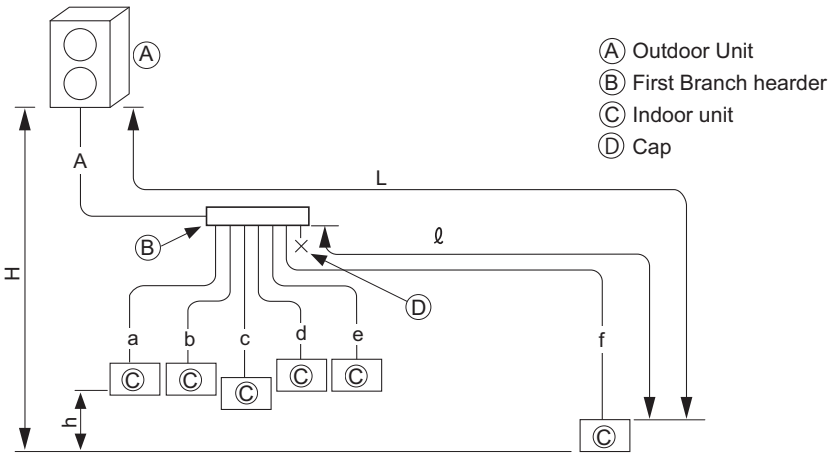

Permissible length	Total piping length	A+a+b+c+d+e+f ≤ 787 ft [240 m]
	Farthest piping length (L)	A+f ≤ 262 ft [80 m]
	Farthest piping length after first branch (ℓ)	d ≤ 98 ft [30 m]
Permissible height difference	Height difference between outdoor unit and indoor unit (H)	When the outdoor unit is set higher than indoor units: 164 ft [50 m] Whne the outdoor unit is set lower than indoor units : 131 ft [40 m] (98 ft [30 m]*) * When PKFY-L04/06/08/12NLMU is included.
	Height difference between Indoor units (h)	49 ft [15 m]

■ **Selecting the Refrigerant Branch Kit**

Please select branching kit, which is sold separately, from the table below.
(The kit comprises sets for use with liquid pipes and for use with gas pipes.)

Branch header (4 branches)	Branch header (8 branches)
CMY-Y64-G-E	CMY-Y68-G-E

■ **Select Each Section of Refrigerant Piping**

(1) Section From Outdoor Unit to First Branch (A)
(2) Sections From Branch to Indoor Unit (a,b,c,d)
} Each Section of Piping

Select the size from the table to the right.

(1) Refrigerant Piping Diameter In Section From Outdoor Unit to First Branch (Outdoor Unit Piping Diameter)

Model	Piping Diameter (inch [mm])	
MXZ-SM36/48NL	Liquid Line	3/8 [ø9.52]
	Gas Line	5/8 [ø15.88]

(2) Refrigerant Piping Diameter In Section From Branch to Indoor Unit (Indoor Unit Piping Diameter)

Model number	Piping Diameter (inch [mm])	
18 or lower	Liquid Line	1/4 [ø6.35]
	Gas Line	1/2 [ø12.7]
24 to 54	Liquid Line	3/8 [ø9.52]
	Gas Line	5/8 [ø15.88]

■ **Additional refrigerant charge**

Refer to “13-3. Refrigerant charging calculation”.

Method of Combined Branching of Lines and Headers
Connection Examples
(Connecting to 5 Indoor Units)

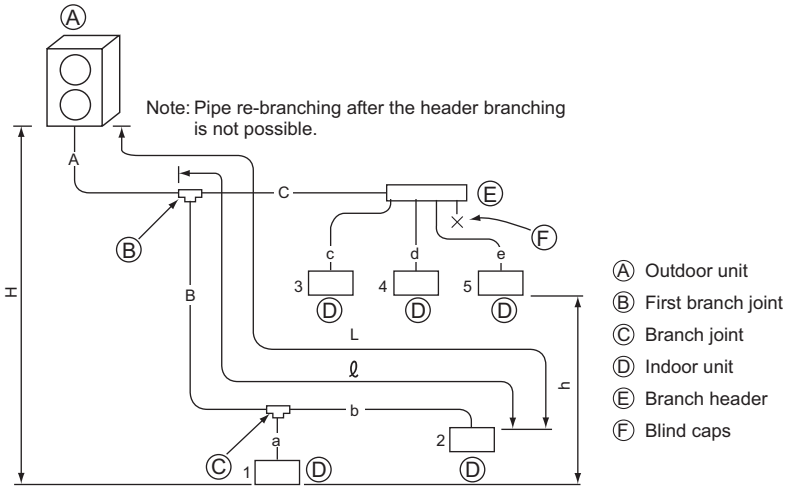

Permissible length	Total piping length	A+B+C+a+b+c+d+e ≤ 787 ft [240 m]
	Farthest piping length (L)	A+B+b ≤ 262 ft [80 m]
	Farthest piping length after first branch (ℓ)	B+b ≤ 98 ft [30 m]
Permissible height difference	Height difference between outdoor unit and indoor unit (H)	When the outdoor unit is set Higher than indoor units: 164 ft [50 m] When the outdoor unit is set lower than indoor units : 131 ft [40 m] (98 ft [30 m]*) * When PKFY-L04/06/08/12NLMU is included.
	Height difference between indoor units (h)	49 ft [15 m]

■ **Selecting the Refrigerant Branch Kit**

Please select branching kit, which is sold separately, from the table below.
(The kit comprises sets for use with liquid pipes and for use with gas pipes.)

Branch Joint	Branch Header (4 branches)	Branch Header (8 branches)
CMY-Y62-G-E	CMY-Y64-G-E	CMY-Y68-G-E

■ **Select Each Section of Refrigerant Piping**

(1) Section From Outdoor Unit to First Branch (A)
(2) Sections From Branch to Indoor Unit (a,b,c,d,e)
(3) Section From Branch to Branch (B,C)
} Each Section of Piping

Select the size from the table to the right.

(1) Refrigerant Piping Diameter In Section From Outdoor Unit to First Branch (Outdoor Unit Piping Diameter)

Model	Piping Diameter (inch [mm])	
MXZ-SM36/48NL	Liquid Line	3/8 [ø9.52]
	Gas Line	5/8 [ø15.88]

(2) Refrigerant Piping Diameter In Section From Branch to Indoor Unit (Indoor Unit Piping Diameter)

Model number	Piping Diameter(inch [mm])	
18 or lower	Liquid Line	1/4 [ø6.35]
	Gas Line	1/2 [ø12.7]
24 to 54	Liquid Line	3/8 [ø9.52]
	Gas Line	5/8 [ø15.88]

(3) Refrigerant Piping Diameter In Section From Branch to Branch

Liquid Line (inch [mm])	Gas Line (inch [mm])
3/8 [ø9.52]	5/8 [ø15.88]

■ **Additional refrigerant charge**

Refer to “13-3. Refrigerant charging calculation”.

Branch box Method
Connection Examples
(Connecting to 8 Indoor Units)

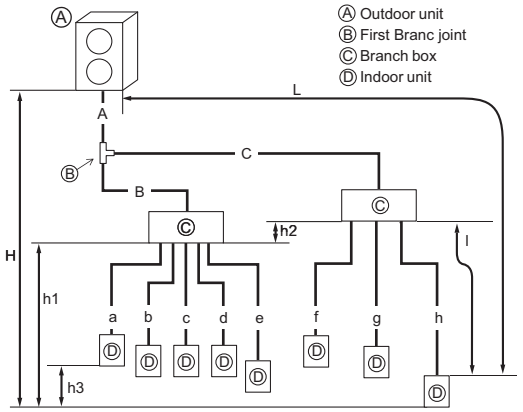

Permissible length (One-way)	Total piping length	A + B + C + a + b + c + d + e + f + g + h ≤ 492 ft [150 m]
	Farthest piping length (L)	A + C + h ≤ 262 ft [80 m]
	Total Piping length between outdoor unit and branch boxes	A + B + C ≤ 180 ft [55m]
	Piping length between the first branch joint and farthest branch box	C ≤ 98 ft [30 m]
	Farthest piping length after branch box (l)	l ≤ 82 ft [25 m]
	Total piping length between branch boxes and indoor units	a + b + c + d + e + f + g + h ≤ 312 ft [95 m]
Permissible height difference (One-way)	Height difference between outdoor unit and indoor unit (H1)	When the outdoor unit is set higher than the indoor unit: 164 ft [50 m] When the outdoor unit is set lower than the indoor unit : 131 ft [40 m]
	Height difference between outdoor unit and branch box (H2)	When the outdoor unit is set higher than the branch box: 164 ft [50 m] When the outdoor unit is set lower than the branch box: 131 ft [40 m]
	Height difference between branch box and indoor unit(h1) Height difference between branch boxes (h2)	h1 + h2 ≤ 49 ft [15 m]
	Height difference between branch boxes (h2)	h2 ≤ 49 ft [15 m]
	Height difference between indoor units (h3)	h3 ≤ 39 ft [12 m]
Number of bends	|A+B+a|, |A+B+b|, |A+B+c|, |A+B+d|, |A+B+e|, |A+B+f|, |A+B+g|, |A+B+h|	≤ 15

*1 Branch box should be placed within the level between the outdoor unit and indoor units.

■ **Select Each Section of Refrigerant Piping**

(1) Section From Outdoor Unit to Branch box (A, B, C)
(2) Sections From Branch box to Indoor Unit (a to h)
} Each Section of Piping

Select the size from the table to the right.

(1) Refrigerant Piping Diameter In Section From Outdoor Unit to Branch box (Outdoor Unit Piping Diameter)

Model	Piping Diameter (inch[mm])	
MXZ-SM36/48NL MXZ-SM36/42/48NLHZ	Liquid Line	3/8 [ø9.52]
	Gas Line	5/8 [ø15.88]
MXZ-SM60NL MXZ-SM60NLHZ	Liquid Line	3/8 [ø9.52]
	Gas Line	3/4 [ø19.05]

(2) Refrigerant Piping Diameter In Section From Branch box to Indoor Unit (Indoor Unit Piping Diameter)

Indoor unit series	Model number	A Liquid pipe (inch[mm])	B Gas pipe (inch[mm])
M series or S series	– 12	1/4 [ø6.35]	3/8 [ø9.52]
	15,18		1/2 [ø12.7]
	24 –	3/8 [ø9.52]	5/8 [ø15.88]
P series	– 18	1/4 [ø6.35]	1/2 [ø12.7]
	24 –	3/8 [ø9.52]	5/8 [ø15.88]

When both of following bullet are satisfied gas piping diagram size shall be increased by one size.
• Indoor units which connected are all of A-COIL type (PAA-A).
• Total piping length is 33 ft (10 m) or less.

■ **Additional refrigerant charge**

Refer to “13-3. Refrigerant charging calculation”.

13-2-2. MXZ-SM60NL-U1/MXZ-SM36/42/48/60NLHZ-U1

Line-Branch Method
Connection Examples
(Connecting to 5 Indoor Units)

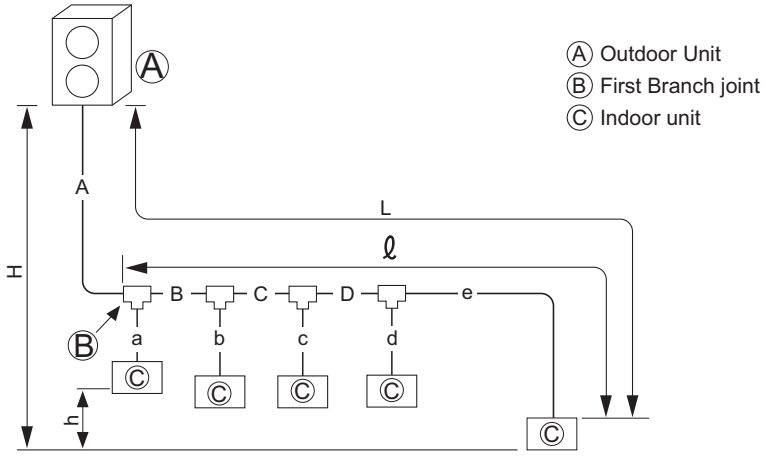

Permissible length	Total piping length	A+B+C+D+a+b+c+d+e ≤ 492 ft [150 m]
	Farthest piping length (L)	A+B+C+D+e ≤ 262 ft [80 m]
	Farthest piping length after first branch (ℓ)	B+C+D+e ≤ 98 ft [30 m]
Permissible height difference	Height difference between outdoor unit and indoor unit (H)	When the outdoor unit is set Higher than indoor units: 164ft [50m] When the outdoor unit is set lower than indoor units : 131ft [40m]
	Height difference between indoor units (h)	49 ft [15 m]
■ **Selecting the Refrigerant Branch Kit**		Use an optional branch piping kit (CMY-Y62-G-E).

■ **Select Each Section of Refrigerant Piping**

(1) Section From Outdoor Unit to First Branch (A)
(2) Sections From Branch to Indoor Unit (a,b,c,d)
(3) Section From Branch to Branch (B,C)
} Each Section of Piping

Select the size from the table to the right.

(1) Refrigerant Piping Diameter In Section From Outdoor Unit to First Branch (Outdoor Unit Piping Diameter)

Model	Piping Diameter (inch [mm])	
MXZ-SM36/42/48NLHZ	Liquid Line	3/8 [ø9.52]
	Gas Line	5/8 [ø15.88]
MXZ-SM60NL MXZ-SM60NLHZ	Liquid Line	3/8 [ø9.52]
	Gas Line	3/4 [ø19.05]

(2) Refrigerant Piping Diameter In Section From Branch to Indoor Unit (Indoor Unit Piping Diameter)

Model number	Piping Diameter (inch [mm])	
18 or lower	Liquid Line	1/4 [ø6.35]
	Gas Line	1/2 [ø12.7]
24 to 54	Liquid Line	3/8 [ø9.52]
	Gas Line	5/8 [ø15.88]

(3) Refrigerant Piping Diameter In Section From Branch to Branch

Model	Piping Diameter (inch [mm])	
MXZ-SM36/42/48NLHZ	Liquid Line	3/8 [ø9.52]
	Gas Line	5/8 [ø15.88]
MXZ-SM60NL MXZ-SM60NLHZ	Liquid Line	3/8 [ø9.52]
	Gas Line	3/4 [ø19.05]

■ **Additional refrigerant charge**

Refer to “13-3. Refrigerant charging calculation”.

Header-Branch Method
Connection Examples
(Connecting to 6 Indoor Units)

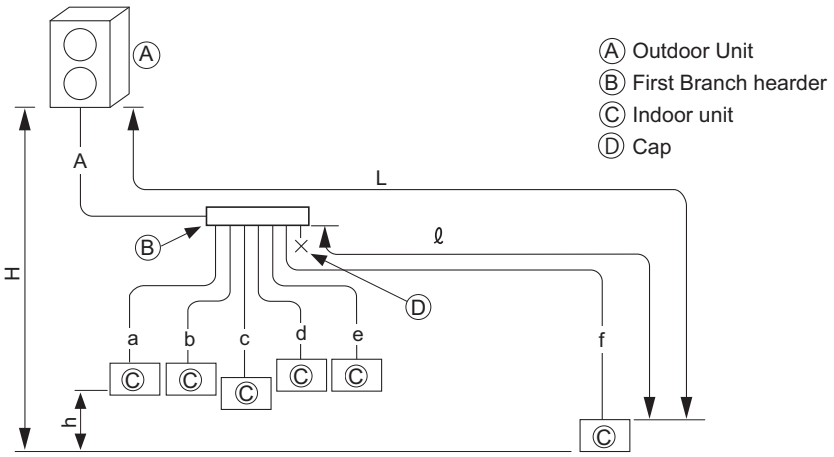

Permissible length	Total piping length	A+a+b+c+d+e+f ≤ 492 ft [150 m]
	Farthest piping length (L)	A+f ≤ 262 ft [80 m]
	Farthest piping length after first branch (ℓ)	d ≤ 98 ft [30 m]
Permissible height difference	Height difference between outdoor unit and indoor unit (H)	When the outdoor unit is set Higher than indoor units: 164 ft [50 m] When the outdoor unit is set lower than indoor units : 131 ft [40 m]
	Height difference between indoor units (h)	49 ft [15 m]

■ **Selecting the Refrigerant Branch Kit**

Please select branching kit, which is sold separately, from the table below.
(The kit comprises sets for use with liquid pipes and for use with gas pipes.)

Branch header (4 branches)	Branch header (8 branches)
CMY-Y64-G-E	CMY-Y68-G-E

■ **Select Each Section of Refrigerant Piping**

(1) Section From Outdoor Unit to First Branch (A)
(2) Sections From Branch to Indoor Unit (a,b,c,d)
} Each Section of Piping

Select the size from the table to the right.

(1) Refrigerant Piping Diameter In Section From Outdoor Unit to First Branch (Outdoor Unit Piping Diameter)

Model	Piping Diameter (inch [mm])	
MXZ-SM36/42/48NLHZ	Liquid Line	3/8 [ø9.52]
	Gas Line	5/8 [ø15.88]
MXZ-SM60NL MXZ-SM60NLHZ	Liquid Line	3/8 [ø9.52]
	Gas Line	3/4 [ø19.05]

(2) Refrigerant Piping Diameter In Section From Branch to Indoor Unit (Indoor Unit Piping Diameter)

Model number	Piping Diameter (inch [mm])	
18 or lower	Liquid Line	1/4 [ø6.35]
	Gas Line	1/2 [ø12.7]
24 to 54	Liquid Line	3/8 [ø9.52]
	Gas Line	5/8 [ø15.88]

■ **Additional refrigerant charge**

Refer to “13-3. Refrigerant charging calculation”.

Method of Combined Branching of Lines and Headers
Connection Examples
(Connecting to 5 Indoor Units)

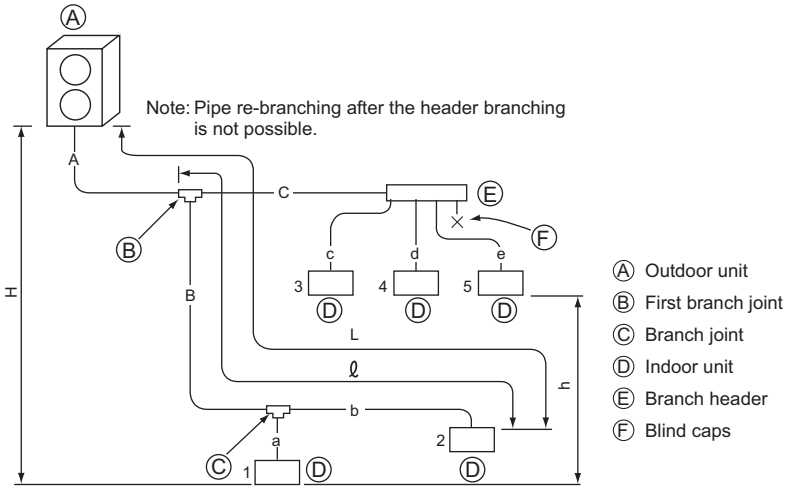

Permissible length	Total piping length	A+B+C+a+b+c+d+e ≤ 492 ft [150 m]
	Farthest piping length (L)	A+B+b ≤ 262 ft [80 m]
	Farthest piping length after first branch (ℓ)	B+b ≤ 98 ft [30 m]
Permissible Height Difference	Height difference between outdoor unit and indoor unit (H)	When the outdoor unit is set higher than indoor units: 164 ft [50 m] When the outdoor unit is set lower than indoor units : 131 ft [40 m]
	Height difference between Indoor units (h)	49 ft [15 m]

■ **Selecting the Refrigerant Branch Kit**

Please select branching kit, which is sold separately, from the table below.
(The kit comprises sets for use with liquid pipes and for use with gas pipes.)

Branch Joint	Branch Header (4 branches)	Branch Header (8 branches)
CMY-Y62-G-E	CMY-Y64-G-E	CMY-Y68-G-E

■ **Select Each Section of Refrigerant Piping**

(1) Section From Outdoor Unit to First Branch (A)
(2) Sections From Branch to Indoor Unit (a,b,c,d,e)
(3) Section From Branch to Branch (B,C)

} Each Section of Piping

Select the size from the table to the right.

(1) Refrigerant Piping Diameter In Section From Outdoor Unit to First Branch (Outdoor Unit Piping Diameter)

Model	Piping Diameter (inch [mm])	
MXZ-SM36/42/48NLHZ	Liquid Line	3/8 [ø9.52]
	Gas Line	5/8 [ø15.88]
MXZ-SM60NL MXZ-SM60NLHZ	Liquid Line	3/8 [ø9.52]
	Gas Line	3/4 [ø19.05]

(2) Refrigerant Piping Diameter In Section From Branch to Indoor Unit (Indoor Unit Piping Diameter)

Model number	Piping Diameter(inch [mm])	
18 or lower	Liquid Line	1/4 [ø6.35]
	Gas Line	1/2 [ø12.7]
24 to 54	Liquid Line	3/8 [ø9.52]
	Gas Line	5/8 [ø15.88]

(3) Refrigerant Piping Diameter In Section From Branch to Branch

Model	Piping Diameter (inch [mm])	
MXZ-SM36/42/48NLHZ	Liquid Line	3/8 [ø9.52]
	Gas Line	5/8 [ø15.88]
MXZ-SM60NL MXZ-SM60NLHZ	Liquid Line	3/8 [ø9.52]
	Gas Line	3/4 [ø19.05]

■ **Additional refrigerant charge**

Refer to “13-3. Refrigerant charging calculation”.

Branch box Method
Connection Examples
(Connecting to 8 Indoor Units)

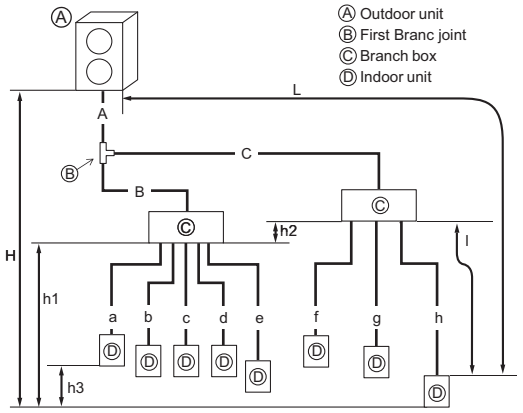

Permissible length (One-way)	Total piping length	A + B + C + a + b + c + d + e + f + g + h ≤ 492 ft [150 m]
	Farthest piping length (L)	A + C + h ≤ 262 ft [80 m]
	Total Piping length between outdoor unit and branch boxes	A + B + C ≤ 180 ft [55m]
	Piping length between the first branch joint and farthest branch box	C ≤ 98 ft [30 m]
	Farthest piping length after branch box (l)	l ≤ 82 ft [25 m]
	Total piping length between branch boxes and indoor units	a + b + c + d + e + f + g + h ≤ 312 ft [95 m]
Permissible height difference (One-way)	Height difference between outdoor unit and indoor unit (H1)	When the outdoor unit is set higher than the indoor unit: 164 ft [50 m] When the outdoor unit is set lower than the indoor unit : 131 ft [40 m]
	Height difference between outdoor unit and branch box (H2)	When the outdoor unit is set higher than the branch box: 164 ft [50 m] When the outdoor unit is set lower than the branch box: 131 ft [40 m]
	Height difference between branch box and indoor unit(h1) Height difference between branch boxes (h2)	h1 + h2 ≤ 49 ft [15 m]
	Height difference between branch boxes (h2)	h2 ≤ 49 ft [15 m]
	Height difference between indoor units (h3)	h3 ≤ 39 ft [12 m]
Number of bends	|A+B+a|, |A+B+b|, |A+B+c|, |A+B+d|, |A+B+e|, |A+B+f|, |A+B+g|, |A+B+h|	≤ 15

*1 Branch box should be placed within the level between the outdoor unit and indoor units.

■ **Select Each Section of Refrigerant Piping**

(1) Section From Outdoor Unit to Branch box (A, B, C)
(2) Sections From Branch box to Indoor Unit (a to h)
} Each Section of Piping

Select the size from the table to the right.

(1) Refrigerant Piping Diameter In Section From Outdoor Unit to Branch box (Outdoor Unit Piping Diameter)

Model	Piping Diameter (inch[mm])	
MXZ-SM36/48NL MXZ-SM36/42/48NLHZ	Liquid Line	3/8 [ø9.52]
	Gas Line	5/8 [ø15.88]
MXZ-SM60NL MXZ-SM60NLHZ	Liquid Line	3/8 [ø9.52]
	Gas Line	3/4 [ø19.05]

(2) Refrigerant Piping Diameter In Section From Branch box to Indoor Unit (Indoor Unit Piping Diameter)

Indoor unit series	Model number	A Liquid pipe (inch[mm])	B Gas pipe (inch[mm])
M series or S series	– 12	1/4 [ø6.35]	3/8 [ø9.52]
	15,18		1/2 [ø12.7]
	24 –	3/8 [ø9.52]	5/8 [ø15.88]
P series	– 18	1/4 [ø6.35]	1/2 [ø12.7]
	24 –	3/8 [ø9.52]	5/8 [ø15.88]

When both of following bullet are satisfied gas piping diagram size shall be increased by one size.
• Indoor units which connected are all of A-COIL type (PAA-A).
• Total piping length is 33 ft (10 m) or less.

■ **Additional refrigerant charge**

Refer to “13-3. Refrigerant charging calculation”.

13-2-3. MXZ-SM72/96/120TL-U1

Line-Branch Method
Connection Examples
(Connecting to 4 Indoor Units)

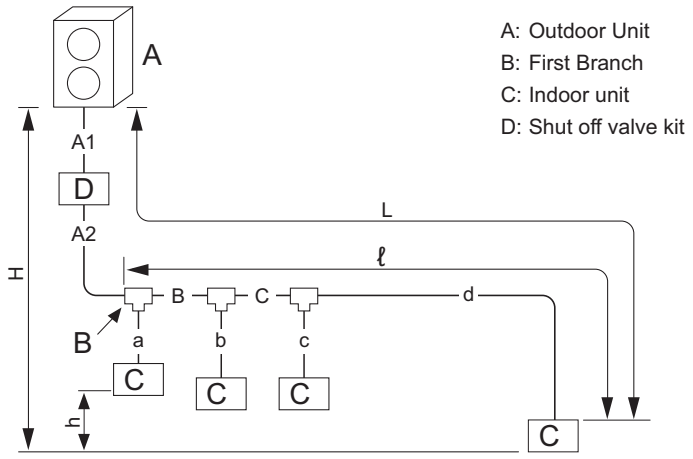

Permissible Length	Total Piping Length	A1 + A2 + B + C + a + b + c + d ≤ 310 m [1016 ft]
	Farthest Piping Length (L)	A1 + A2 + B + C + d ≤ 130 m [426 ft]
	Farthest Piping Length After First Branch (ℓ)	B + C + d ≤ 50 m [164 ft]
Permissible High/Low Difference	High/Low Difference in Indoor/Outdoor Section (H)	H ≤ 50 m [164 ft] (If the outdoor unit is lower, H ≤ 40 m [131 ft])
	High/Low Difference in Indoor/Indoor Section (h)	h ≤ 15 m [49 ft]

■ **Selecting the Refrigerant Branch Kit**

Use an optional branch piping kit (CMY-Y62-G-E).

■ **Select Each Section of Refrigerant Piping**

(1) Section From Outdoor Unit to First Branch (A)
(2) Sections From Branch to Indoor Unit (a,b,c,d)
(3) Section From Branch to Branch (B,C)

} Each Section of Piping

Select the size from the table to the right.

(1) Refrigerant Piping Diameter In Section From Outdoor Unit to First Branch (Outdoor Unit Piping Diameter)

mm [in]

Model	Liquid pipe		Gas pipe
MXZ-SM72	All	ø9.52 [3/8]*	ø22.2 [7/8]
MXZ-SM96	L ≤ 90 m [295 ft]	ø9.52 [3/8]*	ø22.2 [7/8]
	L > 90 m [295 ft]	ø12.7 [1/2]	
MXZ-SM120	All	ø12.7 [1/2]	ø28.58 [1-1/8]

* ø12.7 [1/2] when connecting the indoor unit for PEFY-L/M72 or M96.

(2) Refrigerant Piping Diameter In Section From Branch to Indoor Unit (Indoor Unit Piping Diameter)

mm [in]

Model number	Liquid pipe	Gas pipe
04, 05, 06, 08, 12, 15, 18	ø6.35 [1/4]	ø12.7 [1/2]
24, 27, 30, 36, 48, 54	ø9.52 [3/8]	ø15.88 [5/8]
72	ø9.52 [3/8]	ø19.05 [3/4]
96	ø9.52 [3/8]	ø22.2 [7/8]

(3) Refrigerant Piping Diameter In Section From Branch to Branch

Total down-stream capacity of indoor units	Model	Liquid pipe		Gas pipe
– 54 kBtu/h	MXZ-SM72	All	ø9.52 [3/8]	ø15.88 [5/8]
	MXZ-SM96	L ≤ 90 m [295 ft]	ø9.52 [3/8]	
		L > 90 m [295 ft]	ø12.7 [1/2]	
	MXZ-SM120	All	ø12.7 [1/2]	
54 – 76 kBtu/h	MXZ-SM72	All	ø9.52 [3/8]*	ø19.05 [3/4]
	MXZ-SM96	L ≤ 90 m [295 ft]	ø9.52 [3/8]*	
		L > 90 m [295 ft]	ø12.7 [1/2]	
	MXZ-SM120	All	ø12.7 [1/2]	
76 – 124 kBtu/h	MXZ-SM72	All	ø9.52 [3/8]*	ø22.2 [7/8]
	MXZ-SM96	L ≤ 90 m [295 ft]	ø9.52 [3/8]*	
		L > 90 m [295 ft]	ø12.7 [1/2]	
	MXZ-SM120	All	ø12.7 [1/2]	
124 kBtu/h –	MXZ-SM120	All	ø12.7 [1/2]	ø28.58 [1-1/8]

L: The farthest piping length from the outdoor unit to an indoor unit.

* ø12.7 [1/2] when connecting the indoor unit for PEFY-L/M72 or M96.

■ **Additional refrigerant charge**

Refer to “13-3. Refrigerant charging calculation”.

Header-Branch Method
Connection Examples
(Connecting to 4 Indoor Units)

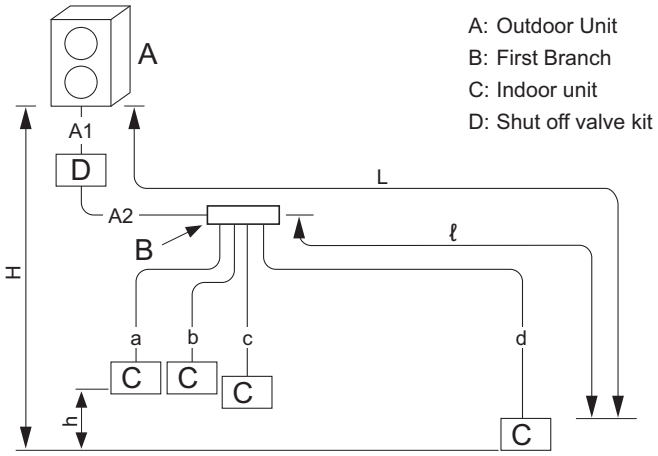

Permissible Length	Total Piping Length	A1 + A2 + a + b + c + d ≤ 310 m [1016 ft]
	Farthest Piping Length (L)	A1 + A2 + d ≤ 130 m [426 ft]
	Farthest Piping Length After First Branch (ℓ)	d ≤ 50 m [164 ft]
Permissible High/Low Difference	High/Low Difference in Indoor/Outdoor Section (H)	H ≤ 50 m [164 ft] (If the outdoor unit is lower, H ≤ 40 m [131 ft])
	High/Low Difference in Indoor/Indoor Section (h)	h ≤ 15 m [49 ft]

■ **Selecting the Refrigerant Branch Kit**

Please select branching kit, which is sold separately, from the table below.
(The kit comprises sets for use with liquid pipes and for use with gas pipes.)

Branch header (4 branches)	Branch header (8 branches)
CMY-Y64-G-E	CMY-Y68-G-E

■ **Select Each Section of Refrigerant Piping**

(1) Section From Outdoor Unit to First Branch (A)
(2) Sections From Branch to Indoor Unit (a,b,c,d)
} Each Section of Piping

Select the size from the table to the right.

(1) Refrigerant Piping Diameter In Section From Outdoor Unit to First Branch (Outdoor Unit Piping Diameter)

mm [in]

Model	Liquid pipe		Gas pipe
MXZ-SM72	All	ø9.52 [3/8]*	ø22.2 [7/8]
MXZ-SM96	L ≤ 90 m [295 ft]	ø9.52 [3/8]*	ø22.2 [7/8]
	L > 90 m [295 ft]	ø12.7 [1/2]	
MXZ-SM120	All	ø12.7 [1/2]	ø28.58 [1-1/8]

* ø12.7 [1/2] when connecting the indoor unit for PEFY-L/M72 or M96.

(2) Refrigerant Piping Diameter In Section From Branch to Indoor Unit (Indoor Unit Piping Diameter)

mm [in]

Model number	Liquid pipe	Gas pipe
04, 05, 06, 08, 12, 15, 18	ø6.35 [1/4]	ø12.7 [1/2]
24, 27, 30, 36, 48, 54	ø9.52 [3/8]	ø15.88 [5/8]
72	ø9.52 [3/8]	ø19.05 [3/4]
96	ø9.52 [3/8]	ø22.2 [7/8]

■ **Additional refrigerant charge**

Refer to “13-3. Refrigerant charging calculation”.

Method of Combined Branching of Lines and Headers
Connection Examples
(Connecting to 5 Indoor Units)

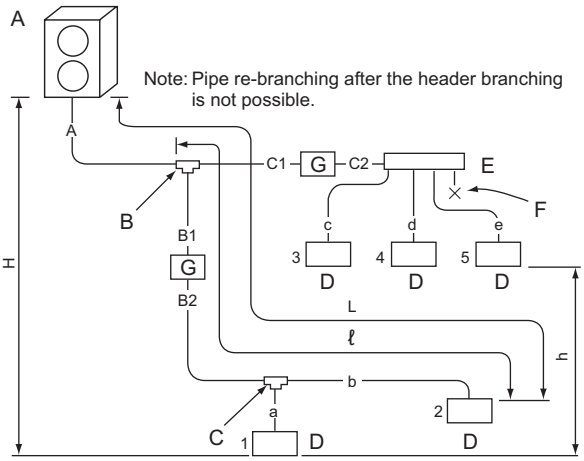

A: Outdoor unit
B: First branching (branching joint)
C: Branching joint
D: Indoor unit
E: Branching header
F: Blind caps
G: Shut off valve kit

Permissible Length	Total Piping Length	A + B1 + B2 + C1 + C2 + a + b + c + d + e ≤ 240 m [787 ft]
	Farthest Piping Length (L)	A + B1 + B2 + b ≤ 80 m [262 ft]
	Farthest Piping Length After First Branch (ℓ)	B1 + B2 + b ≤ 50 m [164 ft]
Permissible High/Low Difference	High/Low Difference in Indoor/Outdoor Section (H)	H ≤ 50 m [164 ft] (If the outdoor unit is lower, H ≤ 40 m [131 ft])
	High/Low Difference in Indoor/Indoor Section (h)	h ≤ 15 m [49 ft]

■ **Selecting the Refrigerant Branch Kit**

Please select branching kit, which is sold separately, from the table below.
(The kit comprises sets for use with liquid pipes and for use with gas pipes.)

Branch Joint	Branch Header (4 branches)	Branch Header (8 branches)
CMY-Y62-G-E	CMY-Y64-G-E	CMY-Y68-G-E

■ **Select Each Section of Refrigerant Piping**

(1) Section From Outdoor Unit to First Branch (A)
(2) Sections From Branch to Indoor Unit (a,b,c,d,e)
(3) Section From Branch to Branch (B,C)
} Each Section of Piping

Select the size from the table to the right.

(1) Refrigerant Piping Diameter In Section From Outdoor Unit to First Branch (Outdoor Unit Piping Diameter)

mm [in]

Model	Liquid pipe		Gas pipe
MXZ-SM72	All	ø9.52 [3/8]*	ø22.2 [7/8]
MXZ-SM96	L ≤ 90 m [295 ft]	ø9.52 [3/8]*	ø22.2 [7/8]
	L > 90 m [295 ft]	ø12.7 [1/2]	
MXZ-SM120	All	ø12.7 [1/2]	ø28.58 [1-1/8]

* ø12.7 [1/2] when connecting the indoor unit for PEFY-L/M72 or M96.

(2) Refrigerant Piping Diameter In Section From Branch to Indoor Unit (Indoor Unit Piping Diameter)

mm [in]

Model number	Liquid pipe	Gas pipe
04, 05, 06, 08, 12, 15, 18	ø6.35 [1/4]	ø12.7 [1/2]
24, 27, 30, 36, 48, 54	ø9.52 [3/8]	ø15.88 [5/8]
72	ø9.52 [3/8]	ø19.05 [3/4]
96	ø9.52 [3/8]	ø22.2 [7/8]

(3) Refrigerant Piping Diameter In Section From Branch to Branch

Total down-stream capacity of indoor units	Model	Liquid pipe		Gas pipe
– 54 kBtu/h	MXZ-SM72	All	ø9.52 [3/8]	ø15.88 [5/8]
	MXZ-SM96	L ≤ 90 m [295 ft]	ø9.52 [3/8]	
		L > 90 m [295 ft]	ø12.7 [1/2]	
	MXZ-SM120	All	ø12.7 [1/2]	
54 – 76 kBtu/h	MXZ-SM72	All	ø9.52 [3/8]*	ø19.05 [3/4]
	MXZ-SM96	L ≤ 90 m [295 ft]	ø9.52 [3/8]*	
		L > 90 m [295 ft]	ø12.7 [1/2]	
	MXZ-SM120	All	ø12.7 [1/2]	
76 – 124 kBtu/h	MXZ-SM72	All	ø9.52 [3/8]*	ø22.2 [7/8]
	MXZ-SM96	L ≤ 90 m [295 ft]	ø9.52 [3/8]*	
		L > 90 m [295 ft]	ø12.7 [1/2]	
	MXZ-SM120	All	ø12.7 [1/2]	
124 kBtu/h –	MXZ-SM120	All	ø12.7 [1/2]	ø28.58 [1-1/8]

L: The farthest piping length from the outdoor unit to an indoor unit.
* ø12.7 [1/2] when connecting the indoor unit for PEFY-L/M72 or M96.

■ **Additional refrigerant charge**

Refer to “13-3. Refrigerant charging calculation”.

13-3. Refrigerant charging calculation

13-3-1. MXZ-SM36, 48, 60NL-U1
MXZ-SM36, 42, 48, 60NLHZ-U1

Additional refrigerant charge
Refrigerant for the extended piping is not included in the outdoor unit when the unit is shipped from the factory.
Therefore, charge each refrigerant piping system with additional refrigerant at the installation site. In addition, in order to carry out service, enter the size and length of each liquid pipe and additional refrigerant charge amounts in the spaces provided on the “Refrigerant amount” plate on the outdoor unit.

Calculation of additional refrigerant charge
- Calculate the additional charge using the liquid pipe size and length of the extended piping.
- Calculate the additional refrigerant charge using the procedure below, and charge with the additional refrigerant.
- For amounts less than 0.1 kg, round up the calculated additional refrigerant charge.
  (For example, if the calculated charge is 10.92 kg, round up the charge to 11.0 kg.)
- The amount of additional refrigerant, which is calculated from the total capacity of indoor units and the combination of extended pipes, must not exceed the following amount:

MXZ-SM36/48NL: 29 lbs 1 oz [13.2 kg]
MXZ-SM36/42/48/60NLHZ, MXZ-SM60NL: 25 lbs 2 oz [11.4 kg]

Additional refrigerant charge	=	Amount for the Liquid pipe size of ø6.35	+	Amount for the Liquid pipe size of ø9.52	+	Total capacity of connected indoor units	Amount for the indoor units
		(ft) × 0.22 (oz/ft) (m)× 20.0 (g/m)		(ft) × 0.58 (oz/ft) (m)× 54.0 (g/m)		27 or less	8 lbs 14 oz [4.0kg]
						28 to 54	11 lbs 1 oz [5.0kg]
						55 or more	11 lbs 8 oz [5.2kg]

Included refrigerant amount when shipped from the factory

Included refrigerant amount	
MXZ-SM36/48NL	MXZ-SM60NL MXZ-SM36/42/48/60NLHZ
2 lbs 11 oz [1.2kg]	6 lbs 10 oz [3.0kg]

Example:

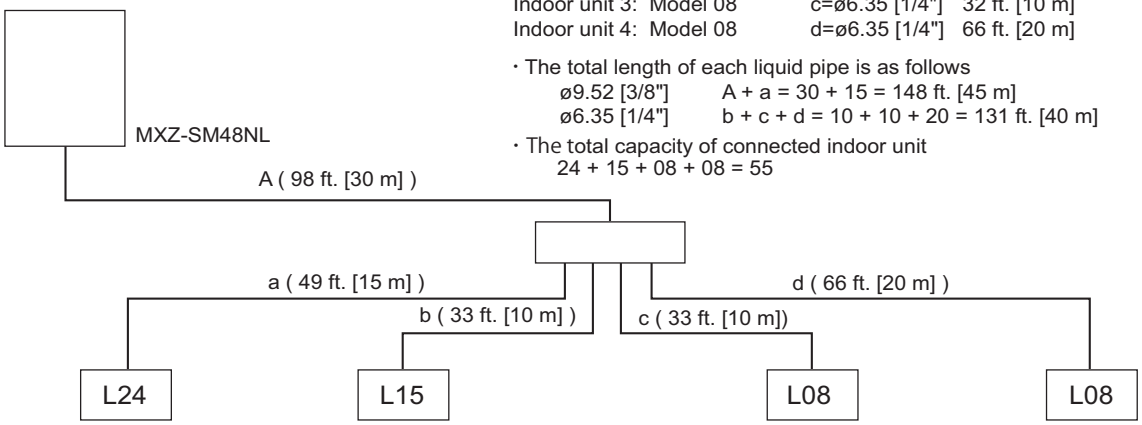

Outdoor unit: MXZ-SM48NL A=ø9.52 [3/8"] 98 ft. [30 m]
Indoor unit 1: Model 24 a=ø9.52 [3/8"] 49 ft. [15 m]
Indoor unit 2: Model 15 b=ø6.35 [1/4"] 32 ft. [10 m]
Indoor unit 3: Model 08 c=ø6.35 [1/4"] 32 ft. [10 m]
Indoor unit 4: Model 08 d=ø6.35 [1/4"] 66 ft. [20 m]

・The total length of each liquid pipe is as follows
ø9.52 [3/8"] A + a = 30 + 15 = 148 ft. [45 m]
ø6.35 [1/4"] b + c + d = 10 + 10 + 20 = 131 ft. [40 m]

・The total capacity of connected indoor unit
24 + 15 + 08 + 08 = 55

Additional refrigerant charge	=	Total length of liquid pipe sized 3/8" x 0.58 (oz/ft.)	+	Total length of liquid pipe sized 1/4" x 0.22 [oz/ft.]	+	Total capacity of connected indoor units	Pipe size Liquid pipe 3/8"
(oz)		148 (ft.) x 0.58 [oz/ft.]		131 (ft.) x 0.22 [oz/ft.]		27 or less	8 lbs 14 oz
						29 to 54	11 lbs 1 oz
						55 or more	11 lbs 8 oz

= 5.86 + 28.82 + 11 lbs 8 oz

= 18 lbs 11 oz

Additional refrigerant charge	=	Total length of liquid pipe sized ø9.52 x 0.054 [kg/m]	+	Total length of liquid pipe sized ø6.35 x 0.020 [kg/m]	+	Total capacity of connected indoor units	Pipe size Liquid pipe ø9.52
(kg)		45 (m) x 0.054 [kg/m]		40 (m) x 0.020 [kg/m]		27 or less	4.0 kg
						29 to 54	5.0 kg
						55 or more	5.2 kg

= 2.43 + 0.8 + 5.2

= 8.43

≈ 8.5 kg (round-up)

13-3-2. MXZ-SM72, 96, 120TL-U1

Additional refrigerant charge

Refrigerant for the indoor units and the extended piping is not included in the outdoor unit when the unit is shipped from the factory. Therefore, charge each refrigerant piping system with additional refrigerant at the installation site. In addition, in order to carry out service, enter the size and length of each liquid pipe and additional refrigerant charge amounts in the spaces provided on the “Refrigerant amount” plate on the outdoor unit.

Note:
- When the unit is stopped, charge the unit with the additional refrigerant through the liquid stop valve after the pipe extensions and indoor units have been vacuumized.
- When the unit is operating, add refrigerant to the gas check valve using a safety charger. Do not add liquid refrigerant directly to the check valve.

Calculation of additional refrigerant charge

■ Calculating formula and reference values

		Amount for the liquid pipe size of ø6.35		Amount for the liquid pipe size of ø9.52		Amount for the liquid pipe size of ø12.7		Total capacity of connected indoor units	Amount for the indoor units*
Additional refrigerant charge	=	(ft) × 0.22 (oz/ft) (m) × 20.0 (g/m)	+	(ft) × 0.59 (oz/ft) (m) × 54.0 (g/m)	+	(ft) × 0.90 (oz/ft) (m) × 84 (g/m)	+	54 or less	123 oz [3.5 kg]
								55 to 92	169 oz [4.8 kg]
								93 to 105	187 oz [5.3 kg]
								106 to 124	198 oz [5.6 kg]
								125 or more	215 oz [6.1 kg]

*Add the refrigerant as specified below when any of the following target indoor units is connected.

Outdoor unit	Target indoor unit	Additional refrigerant amount	
		oz/unit	kg/unit
SM96/120	PLFY-EL12/18NEMU PLFY-EM12/18NEMU	7	0.20
SM120	PEAD-AA15NL, PLA-AE12NL	3	0.09

■ Included refrigerant amount when shipped from the factory

- MXZ-SM72/96/120: 243 oz [6.9 kg]

■ Calculation example

Condition

Outdoor unit: MXZ-SM120TL	A: ø12.7 98 ft [30 m]
Indoor unit 1: Model 27	a: ø9.52 49 ft [15 m]
Indoor unit 2: Model 27	b: ø6.35 32 ft [10 m]
Indoor unit 3: Model 27	c: ø6.35 32 ft [10 m]
Indoor unit 4: Model 27	d: ø6.35 32 ft [10 m]
Indoor unit 5: Model 12	e: ø6.35 49 ft [15 m]

Calculation

- The total length of each liquid line: ø12.7: A = 98 ft [30 m]
  ø9.52: a = 49 ft [15 m]
  ø6.35: b + c + d + e = 145 ft [45 m]
- The total capacity of connected indoor units: 27 + 27 + 27 + 27 + 12 = 120
- Additional refrigerant charge: 98 ft × 0.90 oz/ft + 49 ft × 0.59 oz/ft + 145 ft × 0.22 oz/ft + 205 = 355 oz
  [30 m × 84 g/m / 1000 + 15 m × 54.0 g/m / 1000 + 45 m × 20.0 g/m / 1000 + 5.6 kg = 9.9 kg] (rounded up)

Explanation

- Calculate the additional refrigerant charge using the liquid pipe size and length of the extended piping and total capacity of connected indoor units.
- Calculate the additional refrigerant charge using the procedure shown above, and charge with the additional refrigerant.
- Round up the first decimal place of the calculated value. (For example, if the calculated value is 6.01 kg, the mount of additional refrigerant charge is 6.1 kg.)
- The amount of additional refrigerant, which is calculated from the total capacity of indoor units and the combination of extended pipes, must not be over 511 oz [14.5 kg]. (Refer to "3-4. Constraints on indoor unit installation" for the capacity of indoor units, and "5-1. Precautions for devices that use R454B refrigerant" for extended piping.)

Note:
- After charging the refrigerant, fill in "DATE OF FIRST CHARGE", "ADDITIONAL CHARGE", and "TOTAL CHARGE" columns on the name plate.
- Additional refrigerant charge is not required even when using the shut off valve kit.

14-1. Requirement on installation site

14-1-1. General caution

A. Avoid locations exposed to direct sunlight or other sources of heat.
B. Select a location from which noise emitted by the unit will not inconvenience the neighbors.
C. Select a location permitting easy wiring and pipe access to the power source and indoor unit.
D. Avoid locations where combustible gases may leak, be produced, flow, or accumulate.
E. Note that water may drain from the unit during operation.
F. Select a level location that can bear the weight and vibration of the unit.
G. Avoid locations where the unit can be covered by snow. In areas where heavy snow fall is anticipated, special precautions such as raising the installation location or installing a hood on the air intake must be taken to prevent the snow from blocking the air intake or blowing directly against it. This can reduce the airflow and a malfunction may result.
H. Avoid locations exposed to oil, steam, or sulfuric gas.
I. Use the transportation handles of the outdoor unit to transport the unit. If the unit is carried from the bottom, hands or fingers may be pinched.

14-1-2. Installation at windy location.

When installing the outdoor unit on a rooftop or other location unprotected from the wind, situate the air outlet of the unit so that it is not directly exposed to strong winds. Strong wind entering the air outlet may impede the normal airflow and a malfunction may result.
The following shows two examples of precautions against strong winds.
① Install an optional air guide if the unit is installed in a location where strong winds from a typhoon, etc. may directly enter the air outlet. (Fig. 14-1-2a,14-1-2c)
Ⓐ Front wind baffle
② Position the unit so that the air outlet blows perpendicularly to the seasonal wind direction, if possible. (Fig. 14-1-2b,14-1-2d)
Ⓑ Wind direction

■ MXZ-SM36/48/60NL-U1
■ MXZ-SM36/42/48/60NLHZ-U1

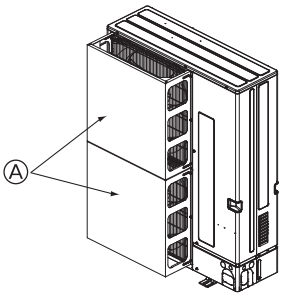

Fig. 14-1-2a

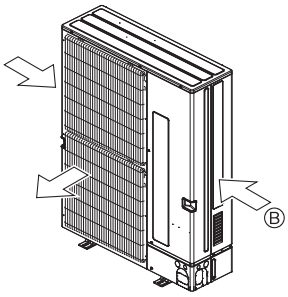

Fig. 14-1-2b

■ MXZ-SM72/96/120TL-U1

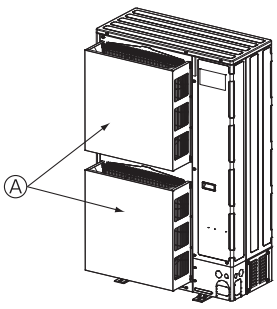

Fig. 14-1-2c

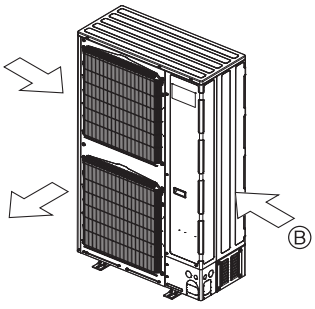

Fig. 14-1-2d

14-1-3. Foundation

A. Be sure to install the unit in a sturdy, level surface to prevent rattling noises during operation. (see Fig. 14-1-3)
B. Foundation specifications are as follows.

mm [in.]

Thickness of concrete	Weight-bearing capacity	Foundation bolt	Bolt length
120 [4-23/32"]	320 kg [705lbs]	M10 [3/8"]	70 [2-3/4"]

C. Make sure that the length of the foundation bolt is within 30 mm [1-3/16"] of the bottom surface of the base.
D. Secure the base of the unit firmly with four-M10 [3/8"] foundation bolts in sturdy locations.

⚠ Warning:
A. The foundation base should be strong enough to support the outdoor unit, otherwise, it may fall down and cause damage or injures.
B. The unit must be installed according to the instructions in order to minimize the risk of damage from earthquakes, typhoons, or strong winds.

- ■ MXZ-SM36/48/60NL-U1
- ■ MXZ-SM36/42/48/60NLHZ-U1
- ■ MXZ-SM72/96/120TL-U1

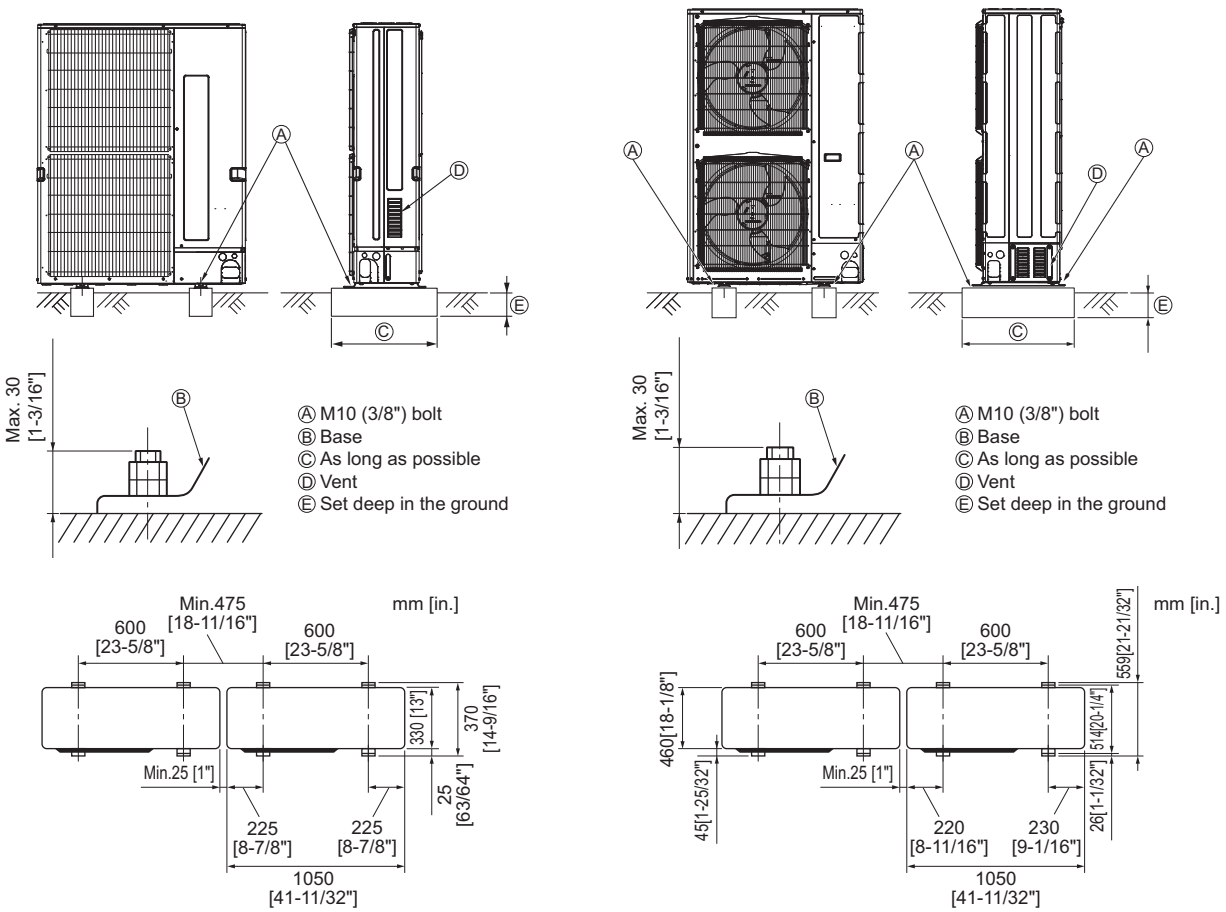

Fig. 14-1-3

14-2. Spacing

External dimension.

MXZ-SM36/48/60NL-U1
MXZ-SM36/42/48/60NLHZ-U1

mm[in.]

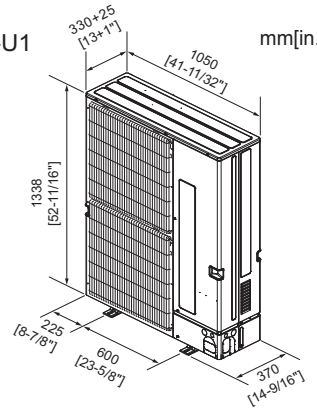

Fig. 14-2-1

MXZ-SM72/96/120TL-U1

mm[in.]

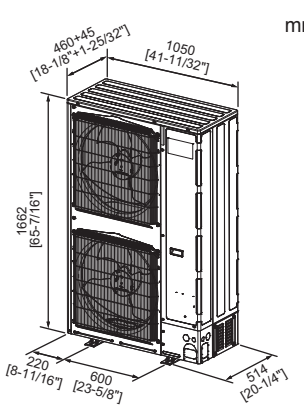

Fig. 14-2-2

14-2-1. When installing a single outdoor unit

Follow Fig. 14-2-3~8 to space individual at the installation site.

14-2-2. When installing multiple outdoor units

Follow Fig. 14-2-9~14 to space grouped at the installation site. Leave 25 mm [1 in.] or more between units.

mm [in.]

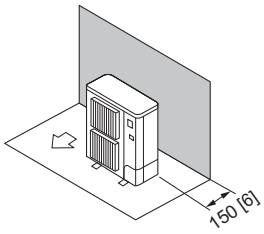

Fig. 14-2-3
Obstacles at rear

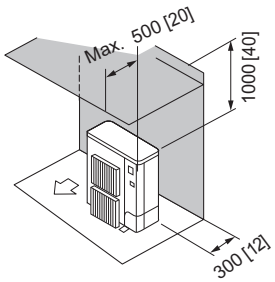

Fig. 14-2-4
Obstacles at rear and above

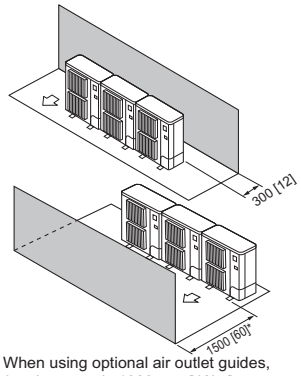

* When using optional air outlet guides, the clearance is 1000 mm [40in.] or more.

Fig. 14-2-9
Obstacles at rear or front

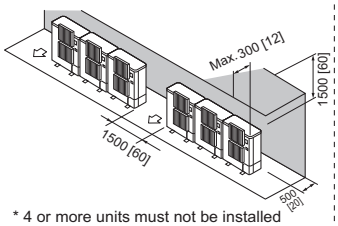

* 4 or more units must not be installed side by side.
* Do not install the optional air outlet guides for upward airflow.

Fig. 14-2-10
Obstacles at rear and above

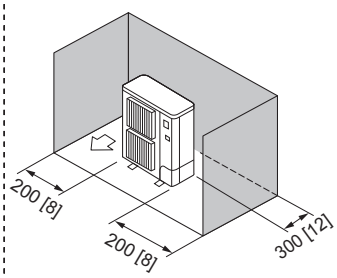

Fig. 14-2-5
Obstacles at rear and sides

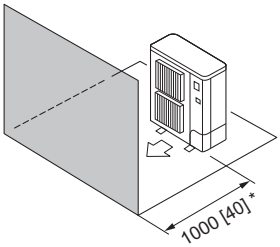

* When using optional air outlet guides, the clearance is 500 mm [20 in.] or more.

Fig. 14-2-6
Obstacles at front

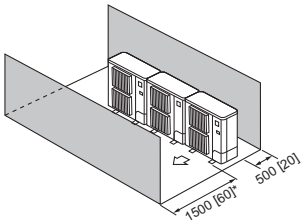

* When using optional air outlet guides, the clearance is 1000 mm [40 in.] or more.

Fig. 14-2-11
Obstacles at front and rear

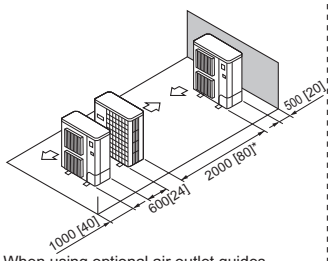

* When using optional air outlet guides installed for upward airflow,the clearance is 1000 mm [40 in.] or more.

Fig. 14-2-12
Single parallel arrangement

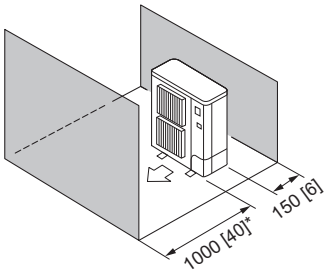

* When using optional air outlet guides, the clearance is 500 mm [20 in.] or more.

Fig. 14-2-7
Obstacles at front and rear

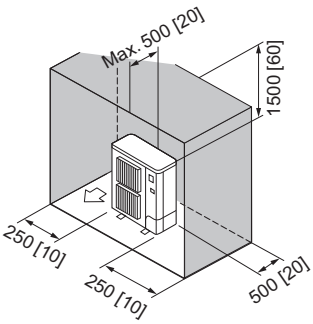

* Do not install optional air outlet guides for upward airflow.

Fig. 14-2-8
Obstacles at rear, sides and above

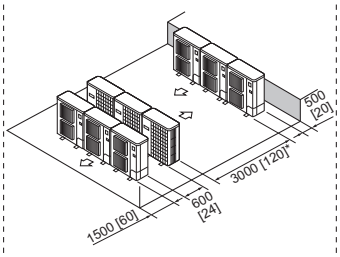

* When using optional air outlet guides installed for upward airflow, the clearance is 1500 mm [60 in.] or more.

Fig. 14-2-13
Multiple parallel arrangement

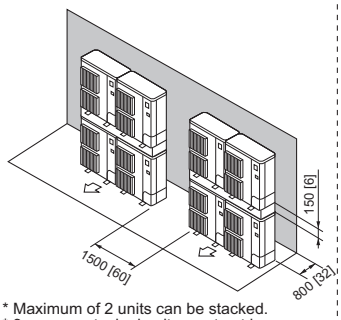

* Maximum of 2 units can be stacked.
* 3 or more stacked units must not be installed side by side.

Fig. 14-2-14
Stacked arrangement

14-3. Piping direction

■ MXZ-SM36/48/60NL-U1
■ MXZ-SM36/42/48/60NLHZ-U1

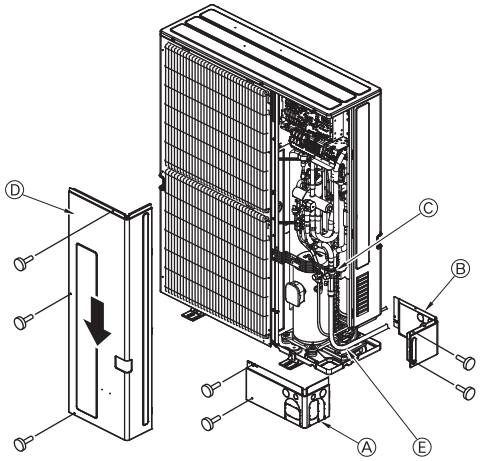

Ⓐ Front piping cover
Ⓑ Piping cover
Ⓒ Stop valve
Ⓓ Service panel
Ⓔ Bend radius : 100 mm [3-15/16"] - 150 mm [5-7/8"]

■ MXZ-SM72/96/120TL-U1

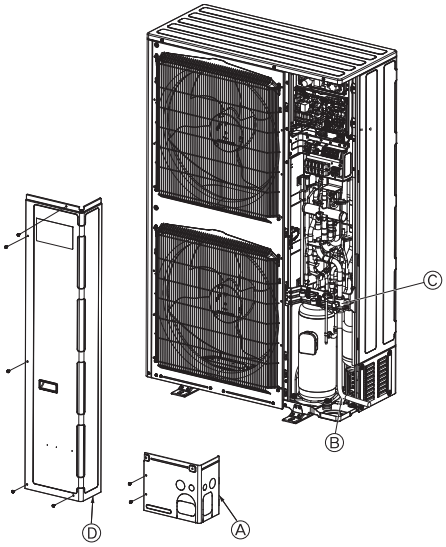

Ⓐ Front piping cover
Ⓑ Bend radius : 100 mm [3-15/16"] - 150 mm [5-7/8"]
Ⓒ Stop (Ball) valve
Ⓓ Service panel

MXZ-SM36NL-U1

1) Cooling

Rated	
Q (Btu/h)	36000
W	2555

Indoor W.B.			72°F / 22.0°C						67°F / 19.4°C						64°F / 18.0°C						61°F / 16.0°C					
Out-door D.B. (°F)	Out-door D.B. (°C)		Max	Rated	75%	50%	25%	Min	Max	Rated	75%	50%	25%	Min	Max	Rated	75%	50%	25%	Min	Max	Rated	75%	50%	25%	Min
115	46.1	Q(Btu/h)	24538	24538	18404	12269	-	9543	22752	22752	17064	11376	-	8848	20973	20973	15730	10487	-	8156	18432	18432	13824	9216	-	7168
		W	1165	1165	932	676	-	479	1267	1267	1014	735	-	521	1288	1288	1030	747	-	529	1320	1320	1056	765	-	542
110	43.3	Q(Btu/h)	29233	29233	21925	14616	-	11368	27105	27105	20329	13552	-	10541	24986	24986	18739	12493	-	9717	21959	21959	16469	10979	-	8539
		W	1555	1555	1244	902	-	639	1694	1694	1355	983	-	696	1742	1742	1394	1010	-	716	1830	1830	1464	1061	-	752
106	41.1	Q(Btu/h)	32989	32989	24741	16494	-	12829	30587	30587	22940	15293	-	11895	28196	28196	21147	14098	-	10965	24780	24780	18585	12390	-	9637
		W	1895	1895	1516	1099	-	779	2068	2068	1654	1199	-	850	2139	2139	1712	1241	-	879	2040	2040	1632	1183	-	838
102	38.9	Q(Btu/h)	36218	36218	27163	18109	-	14085	33581	33581	25186	16790	-	13059	30956	30956	23217	15478	-	12038	27205	27205	20404	13603	-	10580
		W	2204	2204	1763	1278	-	906	2363	2363	1890	1370	-	971	2486	2486	1989	1442	-	1021	1953	1953	1562	1133	-	802
98	36.7	Q(Btu/h)	38390	38390	28792	19195	-	14929	35595	35595	26696	17798	-	13843	32812	32812	24609	16406	-	12760	28837	28837	21628	14418	-	11214
		W	2558	2558	2047	1484	-	1051	2612	2612	2090	1515	-	1074	2356	2356	1885	1366	-	968	1843	1843	1475	1069	-	758
94	34.4	Q(Btu/h)	38855	38855	29142	19428	-	15110	36027	36027	27020	18013	-	14010	33210	33210	24908	16605	-	12915	29187	29187	21890	14593	-	11350
		W	2629	2629	2103	1525	-	1080	2530	2530	2024	1468	-	1040	2248	2248	1798	1304	-	924	1749	1749	1399	1015	-	719
90	32.2	Q(Btu/h)	38971	38971	29228	19485	-	15155	36133	36133	27100	18067	-	14052	33308	33308	24981	16654	-	12953	29273	29273	21955	14636	-	11384
		W	2566	2566	2053	1488	-	1055	2432	2432	1946	1411	-	999	2129	2129	1703	1235	-	875	1649	1649	1319	956	-	678
86	30.0	Q(Btu/h)	39086	39086	29314	19543	-	15200	36240	36240	27180	18120	-	14093	33407	33407	25055	16703	-	12992	29359	29359	22020	14680	-	11418
		W	2503	2503	2003	1452	-	1029	2334	2334	1867	1353	-	959	2009	2009	1607	1165	-	826	1549	1549	1239	898	-	637
82	27.8	Q(Btu/h)	39201	39201	29400	19600	-	15245	36347	36347	27260	18173	-	14135	33505	33505	25129	16753	-	13030	29446	29446	22084	14723	-	11451
		W	2441	2441	1953	1416	-	1003	2235	2235	1788	1296	-	919	1890	1890	1512	1096	-	777	1449	1449	1159	840	-	595
78	25.6	Q(Btu/h)	39316	39316	29487	19658	-	15289	36453	36453	27340	18227	-	14176	33603	33603	25203	16802	-	13068	29532	29532	22149	14766	-	11485
		W	2378	2378	1903	1379	-	977	2137	2137	1709	1239	-	878	1770	1770	1416	1027	-	727	1349	1349	1079	782	-	554
74	23.3	Q(Btu/h)	39431	39431	29573	19715	-	15334	36560	36560	27420	18280	-	14218	33702	33702	25276	16851	-	13106	29619	29619	22214	14809	-	11518
		W	2316	2316	1852	1343	-	952	2038	2038	1631	1182	-	838	1651	1651	1321	957	-	678	1249	1249	999	724	-	513
70	21.1	Q(Btu/h)	39546	39546	29659	19773	-	15379	36667	36667	27500	18333	-	14259	33800	33800	25350	16900	-	13144	29705	29705	22279	14853	-	11552
		W	2253	2253	1802	1307	-	926	1940	1940	1552	1125	-	797	1531	1531	1225	888	-	629	1149	1149	919	666	-	472
66	18.9	Q(Btu/h)	39603	39603	29702	19802	-	15401	36720	36720	27540	18360	-	14280	33849	33849	25387	16925	-	13164	29748	29748	22311	14874	-	11569
		W	2222	2222	1778	1289	-	913	1891	1891	1513	1097	-	777	1470	1470	1176	853	-	604	1098	1098	878	637	-	451
62	16.7	Q(Btu/h)	39603	39603	29702	19802	-	15401	36720	36720	27540	18360	-	14280	33849	33849	25387	16925	-	13164	29748	29748	22311	14874	-	11569
		W	2223	2223	1779	1290	-	914	1891	1891	1513	1097	-	777	1467	1467	1174	851	-	603	1096	1096	877	636	-	451
58	14.4	Q(Btu/h)	39603	39603	29702	19802	-	15401	36720	36720	27540	18360	-	14280	33849	33849	25387	16925	-	13164	29748	29748	22311	14874	-	11569
		W	2225	2225	1780	1290	-	914	1891	1891	1513	1097	-	777	1465	1465	1172	849	-	602	1095	1095	876	635	-	450
54	12.2	Q(Btu/h)	39603	39603	29702	19802	-	15401	36720	36720	27540	18360	-	14280	33849	33849	25387	16925	-	13164	29748	29748	22311	14874	-	11569
		W	2226	2226	1781	1291	-	915	1891	1891	1513	1097	-	777	1462	1462	1169	848	-	601	1093	1093	875	634	-	449
50	10.0	Q(Btu/h)	39603	39603	29702	19802	-	15401	36720	36720	27540	18360	-	14280	33849	33849	25387	16925	-	13164	29748	29748	22311	14874	-	11569
		W	2227	2227	1782	1292	-	915	1891	1891	1513	1097	-	777	1459	1459	1167	846	-	600	1092	1092	874	633	-	449
46	7.8	Q(Btu/h)	39603	39603	29702	19802	-	15401	36720	36720	27540	18360	-	14280	33849	33849	25387	16925	-	13164	29748	29748	22311	14874	-	11569
		W	2228	2228	1783	1292	-	916	1891	1891	1513	1097	-	777	1456	1456	1165	845	-	598	1091	1091	872	633	-	448
42	5.6	Q(Btu/h)	39603	39603	29702	19802	-	15401	36720	36720	27540	18360	-	14280	33849	33849	25387	16925	-	13164	29748	29748	22311	14874	-	11569
		W	2230	2230	1784	1293	-	916	1891	1891	1513	1097	-	777	1453	1453	1163	843	-	597	1089	1089	871	632	-	448
38	3.3	Q(Btu/h)	39603	39603	29702	19802	-	15401	36720	36720	27540	18360	-	14280	33849	33849	25387	16925	-	13164	29748	29748	22311	14874	-	11569
		W	2231	2231	1785	1294	-	917	1891	1891	1513	1097	-	777	1450	1450	1160	841	-	596	1088	1088	870	631	-	447
34	1.1	Q(Btu/h)	39603	39603	29702	19802	-	15401	36720	36720	27540	18360	-	14280	33849	33849	25387	16925	-	13164	29748	29748	22311	14874	-	11569
		W	2232	2232	1786	1295	-	917	1891	1891	1513	1097	-	777	1448	1448	1158	840	-	595	1086	1086	869	630	-	446
30	-1.1	Q(Btu/h)	39603	39603	29702	19802	-	15401	36720	36720	27540	18360	-	14280	33849	33849	25387	16925	-	13164	29748	29748	22311	14874	-	11569
		W	2233	2233	1787	1295	-	918	1891	1891	1513	1097	-	777	1445	1445	1156	838	-	594	1085	1085	868	629	-	446
26	-3.3	Q(Btu/h)	39603	39603	29702	19802	-	15401	36720	36720	27540	18360	-	14280	33849	33849	25387	16925	-	13164	29748	29748	22311	14874	-	11569
		W	2235	2235	1788	1296	-	918	1891	1891	1513	1097	-	777	1442	1442	1154	836	-	593	1083	1083	867	628	-	445
23	-5.0	Q(Btu/h)	39603	39603	29702	19802	-	15401	36720	36720	27540	18360	-	14280	33849	33849	25387	16925	-	13164	29748	29748	22311	14874	-	11569
		W	2236	2236	1789	1297	-	919	1891	1891	1513	1097	-	777	1440	1440	1152	835	-	592	1082	1082	866	628	-	445
18	-7.8	Q(Btu/h)	39603	39603	29702	19802	-	15401	36720	36720	27540	18360	-	14280	33849	33849	25387	16925	-	13164	29748	29748	22311	14874	-	11569
		W	2236	2236	1789	1297	-	919	1891	1891	1513	1097	-	777	1440	1440	1152	835	-	592	1082	1082	866	628	-	445
14	-10.0	Q(Btu/h)	39658	39658	29702	19802	-	15401	36720	36720	27540	18360	-	14280	33849	33849	25387	16925	-	13164	29748	29748	22311	14874	-	11569
		W	2236	2236	1789	1297	-	919	1891	1891	1513	1097	-	777	1440	1440	1152	835	-	592	1082	1082	866	628	-	445
10	-12.2	Q(Btu/h)	39603	39603	29702	19802	-	15401	36720	36720	27540	18360	-	14280	33849	33849	25387	16925	-	13164	29748	29748	22311	14874	-	11569
		W	2236	2236	1789	1297	-	919	1891	1891	1513	1097	-	777	1440	1440	1152	835	-	592	1082	1082	866	628	-	445
6	-14.4	Q(Btu/h)	39603	39603	29702	19802	-	15401	36720	36720	27540	18360	-	14280	33849	33849	25387	16925	-	13164	29748	29748	22311	14874	-	11569
		W	2236	2236	1789	1297	-	919	1891	1891	1513	1097	-	777	1440	1440	1152	835	-	592	1082	1082	866	628	-	445

MXZ-SM36NL-U1

2) Heating

Rated	
Q (Btu/h)	41000
W	3005

Indoor D.B.			79°F / 26.0°C						70°F / 21.1°C						61°F / 16.0°C					
Out-door W.B. (°F)	Out-door W.B. (°C)		Max	Rated	75%	50%	25%	Min	Max	Rated	75%	50%	25%	Min	Max	Rated	75%	50%	25%	Min
60	15.6	Q(Btu/h)	33285	33285	24964	16643	-	10229	41000	41000	30750	20500	-	12600	49029	49029	36772	24515	-	15068
		W	1524	1524	1219	884	-	555	2057	2057	1645	1193	-	749	1769	1769	1415	1026	-	644
55	12.8	Q(Btu/h)	33285	33285	24964	16643	-	10229	41000	41000	30750	20500	-	12600	49029	49029	36772	24515	-	15068
		W	1687	1687	1350	979	-	615	2290	2290	1832	1328	-	835	1943	1943	1554	1127	-	708
50	10.0	Q(Btu/h)	33285	33285	24964	16643	-	10229	41000	41000	30750	20500	-	12600	49029	49029	36772	24515	-	15068
		W	1851	1851	1481	1074	-	675	2524	2524	2019	1464	-	920	2117	2117	1694	1228	-	772
47	8.3	Q(Btu/h)	33285	33285	24964	16643	-	10229	41000	41000	30750	20500	-	12600	49029	49029	36772	24515	-	15068
		W	1967	1967	1574	1141	-	717	2730	2730	2184	1584	-	995	2268	2268	1815	1316	-	827
42	5.6	Q(Btu/h)	33285	33285	24964	16643	-	10229	41000	41000	30750	20500	-	12600	49029	49029	36772	24515	-	15068
		W	2189	2189	1751	1270	-	798	3088	3088	2470	1791	-	1125	2559	2559	2047	1484	-	932
35	1.7	Q(Btu/h)	33285	33285	24964	16643	-	10229	41000	41000	30750	20500	-	12600	49029	49029	36772	24515	-	15068
		W	2662	2662	2130	1544	-	970	3669	3669	2935	2128	-	1337	3182	3182	2545	1845	-	1159
32	0.0	Q(Btu/h)	33032	33032	24774	16516	-	10151	40688	40688	30516	20344	-	12504	48656	48656	36492	24328	-	14953
		W	2862	2862	2290	1660	-	1043	3781	3781	3025	2193	-	1378	3307	3307	2646	1918	-	1205
27	-2.8	Q(Btu/h)	31765	31765	23824	15882	-	9762	39127	39127	29345	19563	-	12024	46789	46789	35092	23395	-	14379
		W	3187	3187	2550	1849	-	1161	3514	3514	2811	2038	-	1280	3043	3043	2435	1765	-	1109
22	-5.6	Q(Btu/h)	30497	30497	22873	15249	-	9372	37566	37566	28174	18783	-	11545	44923	44923	33692	22461	-	13806
		W	3512	3512	2810	2037	-	1280	3247	3247	2598	1883	-	1183	2780	2780	2224	1612	-	1013
17	-8.3	Q(Btu/h)	29171	29171	21879	14586	-	8965	35933	35933	26949	17966	-	11043	42970	42970	32227	21485	-	13205
		W	3464	3464	2771	2009	-	1262	2946	2946	2356	1708	-	1073	2476	2476	1981	1436	-	902
12	-11.1	Q(Btu/h)	27173	27173	20380	13587	-	8351	33471	33471	25103	16735	-	10286	40026	40026	30019	20013	-	12301
		W	3261	3261	2608	1891	-	1188	2744	2744	2195	1591	-	1000	2281	2281	1825	1323	-	831
5	-15.0	Q(Btu/h)	23784	23784	17838	11892	-	7309	29296	29296	21972	14648	-	9003	35034	35034	26275	17517	-	10766
		W	3064	3064	2452	1777	-	1117	2575	2575	2060	1494	-	938	2134	2134	1707	1237	-	777
2	-16.7	Q(Btu/h)	21873	21873	16405	10937	-	6722	26943	26943	20207	13471	-	8280	32219	32219	24165	16110	-	9902
		W	2930	2930	2344	1700	-	1068	2495	2495	1996	1447	-	909	2101	2101	1681	1219	-	766
-3	-19.4	Q(Btu/h)	18307	18307	13730	9153	-	5626	22550	22550	16913	11275	-	6930	26966	26966	20225	13483	-	8287
		W	2707	2707	2165	1570	-	986	2362	2362	1889	1370	-	861	2047	2047	1638	1187	-	746
-8	-22.2	Q(Btu/h)	16537	16537	12403	8269	-	5082	20370	20370	15277	10185	-	6260	24359	24359	18269	12180	-	7486
		W	2483	2483	1986	1440	-	905	2223	2223	1778	1289	-	810	1938	1938	1550	1124	-	706
-13	-25.0	Q(Btu/h)	15216	15216	11412	7608	-	4676	18743	18743	14057	9371	-	5760	22413	22413	16810	11207	-	6888
		W	2258	2258	1806	1310	-	823	2082	2082	1666	1208	-	759	1815	1815	1452	1053	-	661

MXZ-SM48NL-U1

1) Cooling

Rated	
Q (Btu/h)	48000
W	4000

Indoor W.B.			72°F / 22.0°C						67°F / 19.4°C						64°F / 18.0°C						61°F / 16.0°C					
Out-door D.B. (°F)	Out-door D.B. (°C)		Max	Rated	75%	50%	25%	Min	Max	Rated	75%	50%	25%	Min	Max	Rated	75%	50%	25%	Min	Max	Rated	75%	50%	25%	Min
115	46.1	Q(Btu/h)	32718	32718	24538	16359	-	10224	30336	30336	22752	15168	-	9480	27964	27964	20973	13982	-	8739	24576	24576	18432	12288	-	7680
		W	1824	1824	1459	1058	-	559	1984	1984	1587	1151	-	608	2016	2016	1613	1169	-	617	2066	2066	1653	1198	-	633
110	43.3	Q(Btu/h)	38977	38977	29233	19489	-	12180	36140	36140	27105	18070	-	11294	33314	33314	24986	16657	-	10411	29278	29278	21959	14639	-	9149
		W	2434	2434	1947	1412	-	745	2652	2652	2122	1538	-	812	2727	2727	2182	1582	-	835	2864	2864	2291	1661	-	877
106	41.1	Q(Btu/h)	43985	43985	32989	21992	-	13745	40783	40783	30587	20391	-	12745	37594	37594	28196	18797	-	11748	33040	33040	24780	16520	-	10325
		W	2967	2967	2374	1721	-	909	3237	3237	2590	1878	-	991	3349	3349	2679	1943	-	1026	3194	3194	2555	1853	-	978
102	38.9	Q(Btu/h)	48290	48290	36218	24145	-	15091	44774	44774	33581	22387	-	13992	41274	41274	30956	20637	-	12898	36273	36273	27205	18137	-	11335
		W	3451	3451	2761	2001	-	1057	3699	3699	2959	2145	-	1133	3891	3891	3113	2257	-	1192	3057	3057	2446	1773	-	936
98	36.7	Q(Btu/h)	51187	51187	38390	25593	-	15996	47460	47460	35595	23730	-	14831	43750	43750	32812	21875	-	13672	38449	38449	28837	19225	-	12015
		W	4005	4005	3204	2323	-	1227	4090	4090	3272	2372	-	1253	3688	3688	2951	2139	-	1130	2886	2886	2309	1674	-	884
94	34.4	Q(Btu/h)	51807	51807	38855	25904	-	16190	48036	48036	36027	24018	-	15011	44280	44280	33210	22140	-	13838	38915	38915	29187	19458	-	12161
		W	4115	4115	3292	2387	-	1260	3961	3961	3169	2298	-	1213	3520	3520	2816	2041	-	1078	2738	2738	2191	1588	-	839
90	32.2	Q(Btu/h)	51961	51961	38971	25980	-	16238	48178	48178	36133	24089	-	15056	44411	44411	33308	22206	-	13879	39031	39031	29273	19515	-	12197
		W	4017	4017	3214	2330	-	1230	3807	3807	3046	2208	-	1166	3332	3332	2666	1933	-	1021	2582	2582	2065	1497	-	791
86	30.0	Q(Btu/h)	52114	52114	39086	26057	-	16286	48320	48320	36240	24160	-	15100	44542	44542	33407	22271	-	13920	39146	39146	29359	19573	-	12233
		W	3919	3919	3135	2273	-	1200	3653	3653	2923	2119	-	1119	3145	3145	2516	1824	-	963	2425	2425	1940	1406	-	743
82	27.8	Q(Btu/h)	52267	52267	39201	26134	-	16334	48462	48462	36347	24231	-	15144	44674	44674	33505	22337	-	13960	39261	39261	29446	19631	-	12269
		W	3821	3821	3057	2216	-	1170	3499	3499	2799	2030	-	1072	2958	2958	2367	1716	-	906	2268	2268	1815	1316	-	695
78	25.6	Q(Btu/h)	52421	52421	39316	26210	-	16382	48604	48604	36453	24302	-	15189	44805	44805	33603	22402	-	14001	39376	39376	29532	19688	-	12305
		W	3723	3723	2979	2159	-	1140	3345	3345	2676	1940	-	1024	2771	2771	2217	1607	-	849	2112	2112	1689	1225	-	647
74	23.3	Q(Btu/h)	52574	52574	39431	26287	-	16429	48747	48747	36560	24373	-	15233	44936	44936	33702	22468	-	14042	39492	39492	29619	19746	-	12341
		W	3625	3625	2900	2103	-	1110	3191	3191	2553	1851	-	977	2584	2584	2067	1499	-	791	1955	1955	1564	1134	-	599
70	21.1	Q(Btu/h)	52728	52728	39546	26364	-	16477	48889	48889	36667	24444	-	15278	45067	45067	33800	22533	-	14083	39607	39607	29705	19803	-	12377
		W	3527	3527	2822	2046	-	1080	3037	3037	2430	1761	-	930	2397	2397	1918	1390	-	734	1798	1798	1438	1043	-	551
66	18.9	Q(Btu/h)	52804	52804	39603	26402	-	16501	48960	48960	36720	24480	-	15300	45132	45132	33849	22566	-	14104	39664	39664	29748	19832	-	12395
		W	3479	3479	2783	2018	-	1065	2960	2960	2368	1717	-	907	2302	2302	1841	1335	-	705	1719	1719	1375	997	-	526
62	16.7	Q(Btu/h)	52804	52804	39603	26402	-	16501	48960	48960	36720	24480	-	15300	45132	45132	33849	22566	-	14104	39664	39664	29748	19832	-	12395
		W	3481	3481	2785	2019	-	1066	2960	2960	2368	1717	-	907	2297	2297	1838	1332	-	704	1716	1716	1373	995	-	526
58	14.4	Q(Btu/h)	52804	52804	39603	26402	-	16501	48960	48960	36720	24480	-	15300	45132	45132	33849	22566	-	14104	39664	39664	29748	19832	-	12395
		W	3483	3483	2786	2020	-	1067	2960	2960	2368	1717	-	907	2293	2293	1834	1330	-	702	1714	1714	1371	994	-	525
54	12.2	Q(Btu/h)	52804	52804	39603	26402	-	16501	48960	48960	36720	24480	-	15300	45132	45132	33849	22566	-	14104	39664	39664	29748	19832	-	12395
		W	3485	3485	2788	2021	-	1067	2960	2960	2368	1717	-	907	2288	2288	1831	1327	-	701	1712	1712	1369	993	-	524
50	10.0	Q(Btu/h)	52804	52804	39603	26402	-	16501	48960	48960	36720	24480	-	15300	45132	45132	33849	22566	-	14104	39664	39664	29748	19832	-	12395
		W	3487	3487	2789	2022	-	1068	2960	2960	2368	1717	-	907	2284	2284	1827	1325	-	699	1710	1710	1368	992	-	524
46	7.8	Q(Btu/h)	52804	52804	39603	26402	-	16501	48960	48960	36720	24480	-	15300	45132	45132	33849	22566	-	14104	39664	39664	29748	19832	-	12395
		W	3489	3489	2791	2023	-	1068	2960	2960	2368	1717	-	907	2280	2280	1824	1322	-	698	1707	1707	1366	990	-	523
42	5.6	Q(Btu/h)	52804	52804	39603	26402	-	16501	48960	48960	36720	24480	-	15300	45132	45132	33849	22566	-	14104	39664	39664	29748	19832	-	12395
		W	3491	3491	2793	2025	-	1069	2960	2960	2368	1717	-	907	2275	2275	1820	1320	-	697	1705	1705	1364	989	-	522
38	3.3	Q(Btu/h)	52804	52804	39603	26402	-	16501	48960	48960	36720	24480	-	15300	45132	45132	33849	22566	-	14104	39664	39664	29748	19832	-	12395
		W	3493	3493	2794	2026	-	1070	2960	2960	2368	1717	-	907	2271	2271	1817	1317	-	695	1703	1703	1362	988	-	521
34	1.1	Q(Btu/h)	52804	52804	39603	26402	-	16501	48960	48960	36720	24480	-	15300	45132	45132	33849	22566	-	14104	39664	39664	29748	19832	-	12395
		W	3495	3495	2796	2027	-	1070	2960	2960	2368	1717	-	907	2266	2266	1813	1315	-	694	1701	1701	1360	986	-	521
30	-1.1	Q(Btu/h)	52804	52804	39603	26402	-	16501	48960	48960	36720	24480	-	15300	45132	45132	33849	22566	-	14104	39664	39664	29748	19832	-	12395
		W	3497	3497	2797	2028	-	1071	2960	2960	2368	1717	-	907	2262	2262	1810	1312	-	693	1698	1698	1359	985	-	520
26	-3.3	Q(Btu/h)	52804	52804	39603	26402	-	16501	48960	48960	36720	24480	-	15300	45132	45132	33849	22566	-	14104	39664	39664	29748	19832	-	12395
		W	3499	3499	2799	2029	-	1071	2960	2960	2368	1717	-	907	2258	2258	1806	1309	-	691	1696	1696	1357	984	-	519
23	-5.0	Q(Btu/h)	52804	52804	39603	26402	-	16501	48960	48960	36720	24480	-	15300	45132	45132	33849	22566	-	14104	39664	39664	29748	19832	-	12395
		W	3500	3500	2800	2030	-	1072	2960	2960	2368	1717	-	907	2254	2254	1803	1307	-	690	1694	1694	1355	983	-	519
18	-7.8	Q(Btu/h)	52804	52804	39603	26402	-	16501	48960	48960	36720	24480	-	15300	45132	45132	33849	22566	-	14104	39664	39664	29748	19832	-	12395
		W	3500	3500	2800	2030	-	1072	2960	2960	2368	1717	-	907	2254	2254	1803	1307	-	690	1694	1694	1355	983	-	519
14	-10.0	Q(Btu/h)	52877	52877	39603	26402	-	16501	48960	48960	36720	24480	-	15300	45132	45132	33849	22566	-	14104	39664	39664	29748	19832	-	12395
		W	3500	3500	2800	2030	-	1072	2960	2960	2368	1717	-	907	2254	2254	1803	1307	-	690	1694	1694	1355	983	-	519
10	-12.2	Q(Btu/h)	52804	52804	39603	26402	-	16501	48960	48960	36720	24480	-	15300	45132	45132	33849	22566	-	14104	39664	39664	29748	19832	-	12395
		W	3500	3500	2800	2030	-	1072	2960	2960	2368	1717	-	907	2254	2254	1803	1307	-	690	1694	1694	1355	983	-	519
6	-14.4	Q(Btu/h)	52804	52804	39603	26402	-	16501	48960	48960	36720	24480	-	15300	45132	45132	33849	22566	-	14104	39664	39664	29748	19832	-	12395
		W	3500	3500	2800	2030	-	1072	2960	2960	2368	1717	-	907	2254	2254	1803	1307	-	690	1694	1694	1355	983	-	519

MXZ-SM48NL-U1

2) Heating

Rated	
Q (Btu/h)	50000
W	3665

Indoor D.B.			79°F / 26.0°C						70°F / 21.1°C						61°F / 16.0°C					
Out-door W.B. (°F)	Out-door W.B. (°C)		Max	Rated	75%	50%	25%	Min	Max	Rated	75%	50%	25%	Min	Max	Rated	75%	50%	25%	Min
60	15.6	Q(Btu/h)	40592	40592	30444	20296	-	10554	50000	50000	37500	25000	-	13000	59792	59792	44844	29896	-	15546
		W	1859	1859	1487	1078	-	598	2508	2508	2007	1455	-	808	2157	2157	1726	1251	-	694
55	12.8	Q(Btu/h)	40592	40592	30444	20296	-	10554	50000	50000	37500	25000	-	13000	59792	59792	44844	29896	-	15546
		W	2058	2058	1646	1194	-	663	2794	2794	2235	1620	-	899	2370	2370	1896	1374	-	763
50	10.0	Q(Btu/h)	40592	40592	30444	20296	-	10554	50000	50000	37500	25000	-	13000	59792	59792	44844	29896	-	15546
		W	2258	2258	1806	1309	-	727	3079	3079	2463	1786	-	991	2582	2582	2066	1498	-	831
47	8.3	Q(Btu/h)	40592	40592	30444	20296	-	10554	50000	50000	37500	25000	-	13000	59792	59792	44844	29896	-	15546
		W	2399	2399	1919	1391	-	772	3330	3330	2664	1931	-	1072	2767	2767	2213	1605	-	891
42	5.6	Q(Btu/h)	40592	40592	30444	20296	-	10554	50000	50000	37500	25000	-	13000	59792	59792	44844	29896	-	15546
		W	2670	2670	2136	1549	-	860	3766	3766	3013	2184	-	1213	3121	3121	2497	1810	-	1005
35	1.7	Q(Btu/h)	40592	40592	30444	20296	-	10554	50000	50000	37500	25000	-	13000	59792	59792	44844	29896	-	15546
		W	3247	3247	2597	1883	-	1045	4474	4474	3579	2595	-	1441	3880	3880	3104	2251	-	1249
32	0.0	Q(Btu/h)	40283	40283	30212	20141	-	10474	49619	49619	37214	24810	-	12901	59337	59337	44503	29668	-	15428
		W	3491	3491	2793	2025	-	1124	4611	4611	3689	2675	-	1485	4033	4033	3227	2339	-	1299
27	-2.8	Q(Btu/h)	38737	38737	29053	19369	-	10072	47716	47716	35787	23858	-	12406	57060	57060	42795	28530	-	14836
		W	3887	3887	3110	2255	-	1252	4286	4286	3429	2486	-	1380	3712	3712	2969	2153	-	1195
22	-5.6	Q(Btu/h)	37192	37192	27894	18596	-	9670	45812	45812	34359	22906	-	11911	54784	54784	41088	27392	-	14244
		W	4283	4283	3427	2484	-	1379	3960	3960	3168	2297	-	1275	3390	3390	2712	1966	-	1092
17	-8.3	Q(Btu/h)	35575	35575	26681	17787	-	9249	43820	43820	32865	21910	-	11393	52402	52402	39301	26201	-	13625
		W	4224	4224	3379	2450	-	1360	3592	3592	2874	2084	-	1157	3020	3020	2416	1752	-	972
12	-11.1	Q(Btu/h)	33138	33138	24853	16569	-	8616	40818	40818	30614	20409	-	10613	48812	48812	36609	24406	-	12691
		W	3977	3977	3181	2306	-	1280	3346	3346	2677	1941	-	1077	2782	2782	2225	1613	-	896
5	-15.0	Q(Btu/h)	29005	29005	21754	14502	-	7541	35727	35727	26795	17864	-	9289	42724	42724	32043	21362	-	11108
		W	3737	3737	2990	2168	-	1203	3141	3141	2513	1822	-	1011	2602	2602	2082	1509	-	838
2	-16.7	Q(Btu/h)	26675	26675	20006	13337	-	6935	32857	32857	24643	16429	-	8543	39292	39292	29469	19646	-	10216
		W	3574	3574	2859	2073	-	1151	3043	3043	2435	1765	-	980	2563	2563	2050	1486	-	825
-3	-19.4	Q(Btu/h)	22326	22326	16744	11163	-	5805	27500	27500	20625	13750	-	7150	32886	32886	24664	16443	-	8550
		W	3301	3301	2641	1915	-	1063	2880	2880	2304	1671	-	927	2496	2496	1997	1448	-	804
-8	-22.2	Q(Btu/h)	20167	20167	15125	10084	-	5243	24841	24841	18631	12421	-	6459	29706	29706	22280	14853	-	7724
		W	3028	3028	2422	1756	-	975	2711	2711	2169	1572	-	873	2363	2363	1891	1371	-	761
-13	-25.0	Q(Btu/h)	18556	18556	13917	9278	-	4825	22857	22857	17143	11429	-	5943	27333	27333	20500	13667	-	7107
		W	2754	2754	2203	1597	-	887	2540	2540	2032	1473	-	818	2214	2214	1771	1284	-	713

MXZ-SM60NL-U1

1) Cooling

Rated	
Q (Btu/h)	60000
W	5000

Indoor W.B.			72°F / 22.0°C						67°F / 19.4°C						64°F / 18.0°C						61°F / 16.0°C					
Out-door D.B. (°F)	Out-door D.B. (°C)		Max	Rated	75%	50%	25%	Min	Max	Rated	75%	50%	25%	Min	Max	Rated	75%	50%	25%	Min	Max	Rated	75%	50%	25%	Min
115	46.1	Q(Btu/h)	40897	40897	30673	20449	-	10906	37920	37920	28440	18960	-	10112	34955	34955	26217	17478	-	9321	30720	30720	23040	15360	-	8192
		W	2280	2280	1824	1322	-	629	2480	2480	1984	1438	-	684	2520	2520	2016	1462	-	696	2582	2582	2066	1498	-	713
110	43.3	Q(Btu/h)	48722	48722	36541	24361	-	12992	45175	45175	33881	22587	-	12047	41643	41643	31232	20821	-	11105	36598	36598	27448	18299	-	9759
		W	3042	3042	2434	1764	-	840	3316	3316	2652	1923	-	915	3409	3409	2727	1977	-	941	3580	3580	2864	2077	-	988
106	41.1	Q(Btu/h)	54981	54981	41236	27490	-	14662	50978	50978	38234	25489	-	13594	46993	46993	35245	23496	-	12531	41299	41299	30975	20650	-	11013
		W	3709	3709	2967	2151	-	1024	4047	4047	3237	2347	-	1117	4187	4187	3349	2428	-	1156	3993	3993	3194	2316	-	1102
102	38.9	Q(Btu/h)	60363	60363	45272	30181	-	16097	55968	55968	41976	27984	-	14925	51593	51593	38694	25796	-	13758	45342	45342	34006	22671	-	12091
		W	4313	4313	3451	2502	-	1190	4623	4623	3699	2682	-	1276	4864	4864	3891	2821	-	1343	3821	3821	3057	2216	-	1055
98	36.7	Q(Btu/h)	63983	63983	47987	31992	-	17062	59325	59325	44494	29663	-	15820	54687	54687	41015	27344	-	14583	48061	48061	36046	24031	-	12816
		W	5006	5006	4005	2904	-	1382	5113	5113	4090	2965	-	1411	4610	4610	3688	2674	-	1272	3607	3607	2886	2092	-	996
94	34.4	Q(Btu/h)	64759	64759	48569	32380	-	17269	60044	60044	45033	30022	-	16012	55350	55350	41513	27675	-	14760	48644	48644	36483	24322	-	12972
		W	5144	5144	4115	2984	-	1420	4952	4952	3961	2872	-	1367	4399	4399	3520	2552	-	1214	3423	3423	2738	1985	-	945
90	32.2	Q(Btu/h)	64951	64951	48713	32475	-	17320	60222	60222	45167	30111	-	16059	55514	55514	41636	27757	-	14804	48788	48788	36591	24394	-	13010
		W	5022	5022	4017	2913	-	1386	4759	4759	3807	2760	-	1314	4166	4166	3332	2416	-	1150	3227	3227	2582	1872	-	891
86	30.0	Q(Btu/h)	65143	65143	48857	32571	-	17371	60400	60400	45300	30200	-	16107	55678	55678	41759	27839	-	14847	48932	48932	36699	24466	-	13049
		W	4899	4899	3919	2842	-	1352	4567	4567	3653	2649	-	1260	3932	3932	3145	2280	-	1085	3031	3031	2425	1758	-	837
82	27.8	Q(Btu/h)	65334	65334	49001	32667	-	17422	60578	60578	45433	30289	-	16154	55842	55842	41881	27921	-	14891	49076	49076	36807	24538	-	13087
		W	4777	4777	3821	2770	-	1318	4374	4374	3499	2537	-	1207	3698	3698	2958	2145	-	1021	2835	2835	2268	1644	-	783
78	25.6	Q(Btu/h)	65526	65526	49145	32763	-	17474	60756	60756	45567	30378	-	16201	56006	56006	42004	28003	-	14935	49220	49220	36915	24610	-	13125
		W	4654	4654	3723	2699	-	1284	4181	4181	3345	2425	-	1154	3464	3464	2771	2009	-	956	2639	2639	2112	1531	-	728
74	23.3	Q(Btu/h)	65718	65718	49288	32859	-	17525	60933	60933	45700	30467	-	16249	56170	56170	42127	28085	-	14979	49364	49364	37023	24682	-	13164
		W	4531	4531	3625	2628	-	1251	3989	3989	3191	2314	-	1101	3230	3230	2584	1874	-	892	2443	2443	1955	1417	-	674
70	21.1	Q(Btu/h)	65910	65910	49432	32955	-	17576	61111	61111	45833	30556	-	16296	56334	56334	42250	28167	-	15022	49508	49508	37131	24754	-	13202
		W	4409	4409	3527	2557	-	1217	3796	3796	3037	2202	-	1048	2997	2997	2397	1738	-	827	2248	2248	1798	1304	-	620
66	18.9	Q(Btu/h)	66005	66005	49504	33003	-	17601	61200	61200	45900	30600	-	16320	56415	56415	42312	28208	-	15044	49580	49580	37185	24790	-	13221
		W	4349	4349	3479	2522	-	1200	3700	3700	2960	2146	-	1021	2877	2877	2302	1669	-	794	2148	2148	1719	1246	-	593
62	16.7	Q(Btu/h)	66005	66005	49504	33003	-	17601	61200	61200	45900	30600	-	16320	56415	56415	42312	28208	-	15044	49580	49580	37185	24790	-	13221
		W	4351	4351	3481	2524	-	1201	3700	3700	2960	2146	-	1021	2871	2871	2297	1665	-	793	2145	2145	1716	1244	-	592
58	14.4	Q(Btu/h)	66005	66005	49504	33003	-	17601	61200	61200	45900	30600	-	16320	56415	56415	42312	28208	-	15044	49580	49580	37185	24790	-	13221
		W	4354	4354	3483	2525	-	1202	3700	3700	2960	2146	-	1021	2866	2866	2293	1662	-	791	2143	2143	1714	1243	-	591
54	12.2	Q(Btu/h)	66005	66005	49504	33003	-	17601	61200	61200	45900	30600	-	16320	56415	56415	42312	28208	-	15044	49580	49580	37185	24790	-	13221
		W	4356	4356	3485	2527	-	1202	3700	3700	2960	2146	-	1021	2860	2860	2288	1659	-	789	2140	2140	1712	1241	-	591
50	10.0	Q(Btu/h)	66005	66005	49504	33003	-	17601	61200	61200	45900	30600	-	16320	56415	56415	42312	28208	-	15044	49580	49580	37185	24790	-	13221
		W	4359	4359	3487	2528	-	1203	3700	3700	2960	2146	-	1021	2855	2855	2284	1656	-	788	2137	2137	1710	1239	-	590
46	7.8	Q(Btu/h)	66005	66005	49504	33003	-	17601	61200	61200	45900	30600	-	16320	56415	56415	42312	28208	-	15044	49580	49580	37185	24790	-	13221
		W	4361	4361	3489	2529	-	1204	3700	3700	2960	2146	-	1021	2849	2849	2280	1653	-	786	2134	2134	1707	1238	-	589
42	5.6	Q(Btu/h)	66005	66005	49504	33003	-	17601	61200	61200	45900	30600	-	16320	56415	56415	42312	28208	-	15044	49580	49580	37185	24790	-	13221
		W	4363	4363	3491	2531	-	1204	3700	3700	2960	2146	-	1021	2844	2844	2275	1650	-	785	2131	2131	1705	1236	-	588
38	3.3	Q(Btu/h)	66005	66005	49504	33003	-	17601	61200	61200	45900	30600	-	16320	56415	56415	42312	28208	-	15044	49580	49580	37185	24790	-	13221
		W	4366	4366	3493	2532	-	1205	3700	3700	2960	2146	-	1021	2838	2838	2271	1646	-	783	2129	2129	1703	1235	-	587
34	1.1	Q(Btu/h)	66005	66005	49504	33003	-	17601	61200	61200	45900	30600	-	16320	56415	56415	42312	28208	-	15044	49580	49580	37185	24790	-	13221
		W	4368	4368	3495	2534	-	1206	3700	3700	2960	2146	-	1021	2833	2833	2266	1643	-	782	2126	2126	1701	1233	-	587
30	-1.1	Q(Btu/h)	66005	66005	49504	33003	-	17601	61200	61200	45900	30600	-	16320	56415	56415	42312	28208	-	15044	49580	49580	37185	24790	-	13221
		W	4371	4371	3497	2535	-	1206	3700	3700	2960	2146	-	1021	2827	2827	2262	1640	-	780	2123	2123	1698	1231	-	586
26	-3.3	Q(Btu/h)	66005	66005	49504	33003	-	17601	61200	61200	45900	30600	-	16320	56415	56415	42312	28208	-	15044	49580	49580	37185	24790	-	13221
		W	4373	4373	3499	2536	-	1207	3700	3700	2960	2146	-	1021	2822	2822	2258	1637	-	779	2120	2120	1696	1230	-	585
23	-5.0	Q(Btu/h)	66005	66005	49504	33003	-	17601	61200	61200	45900	30600	-	16320	56415	56415	42312	28208	-	15044	49580	49580	37185	24790	-	13221
		W	4375	4375	3500	2538	-	1208	3700	3700	2960	2146	-	1021	2818	2818	2254	1634	-	778	2118	2118	1694	1228	-	585
18	-7.8	Q(Btu/h)	66005	66005	49504	33003	-	17601	61200	61200	45900	30600	-	16320	56415	56415	42312	28208	-	15044	49580	49580	37185	24790	-	13221
		W	4375	4375	3500	2538	-	1208	3700	3700	2960	2146	-	1021	2818	2818	2254	1634	-	778	2118	2118	1694	1228	-	585
14	-10.0	Q(Btu/h)	66096	66096	49504	33003	-	17601	61200	61200	45900	30600	-	16320	56415	56415	42312	28208	-	15044	49580	49580	37185	24790	-	13221
		W	4375	4375	3500	2538	-	1208	3700	3700	2960	2146	-	1021	2818	2818	2254	1634	-	778	2118	2118	1694	1228	-	585
10	-12.2	Q(Btu/h)	66005	66005	49504	33003	-	17601	61200	61200	45900	30600	-	16320	56415	56415	42312	28208	-	15044	49580	49580	37185	24790	-	13221
		W	4375	4375	3500	2538	-	1208	3700	3700	2960	2146	-	1021	2818	2818	2254	1634	-	778	2118	2118	1694	1228	-	585
6	-14.4	Q(Btu/h)	66005	66005	49504	33003	-	17601	61200	61200	45900	30600	-	16320	56415	56415	42312	28208	-	15044	49580	49580	37185	24790	-	13221
		W	4375	4375	3500	2538	-	1208	3700	3700	2960	2146	-	1021	2818	2818	2254	1634	-	778	2118	2118	1694	1228	-	585

MXZ-SM60NL-U1

2) Heating

Rated	
Q (Btu/h)	66000
W	4720

Indoor D.B.			79°F / 26.0°C						70°F / 21.1°C						61°F / 16.0°C					
Out-door W.B. (°F)	Out-door W.B. (°C)		Max	Rated	75%	50%	25%	Min	Max	Rated	75%	50%	25%	Min	Max	Rated	75%	50%	25%	Min
60	15.6	Q(Btu/h)	53581	53581	40186	26791	13395	10960	66000	66000	49500	33000	16500	13500	78925	78925	59194	39463	19731	16144
		W	2394	2394	1915	1388	910	629	3231	3231	2584	1874	1228	849	2778	2778	2222	1611	1056	730
55	12.8	Q(Btu/h)	53581	53581	40186	26791	13395	10960	66000	66000	49500	33000	16500	13500	78925	78925	59194	39463	19731	16144
		W	2651	2651	2120	1537	1007	696	3598	3598	2878	2087	1367	945	3052	3052	2441	1770	1160	802
50	10.0	Q(Btu/h)	53581	53581	40186	26791	13395	10960	66000	66000	49500	33000	16500	13500	78925	78925	59194	39463	19731	16144
		W	2908	2908	2326	1686	1105	764	3965	3965	3172	2300	1507	1042	3326	3326	2660	1929	1264	874
47	8.3	Q(Btu/h)	53581	53581	40186	26791	13395	10960	66000	66000	49500	33000	16500	13500	78925	78925	59194	39463	19731	16144
		W	3090	3090	2472	1792	1174	812	4288	4288	3431	2487	1630	1127	3563	3563	2850	2067	1354	936
42	5.6	Q(Btu/h)	53581	53581	40186	26791	13395	10960	66000	66000	49500	33000	16500	13500	78925	78925	59194	39463	19731	16144
		W	3438	3438	2751	1994	1307	903	4850	4850	3880	2813	1843	1274	4019	4019	3215	2331	1527	1056
35	1.7	Q(Btu/h)	53581	53581	40186	26791	13395	10960	66000	66000	49500	33000	16500	13500	78925	78925	59194	39463	19731	16144
		W	4182	4182	3345	2425	1589	1099	5762	5762	4610	3342	2190	1514	4997	4997	3998	2899	1899	1313
32	0.0	Q(Btu/h)	53523	53523	40142	26762	13381	10948	65928	65928	49446	32964	16482	13485	78840	78840	59130	39420	19710	16126
		W	4496	4496	3597	2608	1708	1181	5939	5939	4751	3445	2257	1560	5194	5194	4155	3013	1974	1365
27	-2.8	Q(Btu/h)	53232	53232	39924	26616	13308	10888	65569	65569	49177	32785	16392	13412	78410	78410	58808	39205	19603	16038
		W	5006	5006	4005	2904	1902	1315	5519	5519	4416	3201	2097	1450	4780	4780	3824	2773	1817	1256
22	-5.6	Q(Btu/h)	52940	52940	39705	26470	13235	10829	65210	65210	48908	32605	16303	13338	77981	77981	58486	38991	19495	15951
		W	5517	5517	4413	3200	2096	1449	5100	5100	4080	2958	1938	1340	4366	4366	3493	2532	1659	1147
17	-8.3	Q(Btu/h)	52635	52635	39477	26318	13159	10766	64835	64835	48626	32417	16209	13262	77532	77532	58149	38766	19383	15859
		W	5440	5440	4352	3155	2067	1429	4627	4627	3701	2683	1758	1215	3889	3889	3111	2256	1478	1022
12	-11.1	Q(Btu/h)	48418	48418	36314	24209	12105	9904	59640	59640	44730	29820	14910	12199	71320	71320	53490	35660	17830	14588
		W	5121	5121	4097	2970	1946	1345	4309	4309	3447	2499	1638	1132	3582	3582	2866	2078	1361	941
5	-15.0	Q(Btu/h)	38871	38871	29153	19435	9718	7951	47880	47880	35910	23940	11970	9794	57257	57257	42943	28628	14314	11712
		W	4813	4813	3851	2792	1829	1265	4045	4045	3236	2346	1537	1063	3351	3351	2681	1944	1273	880
2	-16.7	Q(Btu/h)	35211	35211	26408	17605	8803	7202	43371	43371	32529	21686	10843	8871	51865	51865	38899	25933	12966	10609
		W	4603	4603	3682	2670	1749	1209	3919	3919	3135	2273	1489	1030	3300	3300	2640	1914	1254	867
-3	-19.4	Q(Btu/h)	29470	29470	22102	14735	7367	6028	36300	36300	27225	18150	9075	7425	43409	43409	32557	21704	10852	8879
		W	4252	4252	3401	2466	1616	1117	3709	3709	2968	2151	1410	975	3215	3215	2572	1865	1222	845
-8	-22.2	Q(Btu/h)	26621	26621	19965	13310	6655	5445	32790	32790	24593	16395	8198	6707	39212	39212	29409	19606	9803	8021
		W	3899	3899	3119	2262	1482	1024	3491	3491	2793	2025	1327	917	3044	3044	2435	1765	1157	800
-13	-25.0	Q(Btu/h)	24494	24494	18371	12247	6124	5010	30171	30171	22629	15086	7543	6171	36080	36080	27060	18040	9020	7380
		W	3547	3547	2837	2057	1348	932	3271	3271	2617	1897	1243	859	2851	2851	2281	1653	1083	749

MXZ-SM36NLHZ-U1

1) Cooling

Rated	
Q (Btu/h)	36000
W	2485

Indoor W.B.			72°F / 22.0°C						67°F / 19.4°C						64°F / 18.0°C						61°F / 16.0°C					
Out-door D.B. (°F)	Out-door D.B. (°C)		Max	Rated	75%	50%	25%	Min	Max	Rated	75%	50%	25%	Min	Max	Rated	75%	50%	25%	Min	Max	Rated	75%	50%	25%	Min
115	46.1	Q(Btu/h)	24538	24538	18404	12269	-	8861	22752	22752	17064	11376	-	8216	20973	20973	15730	10487	-	7574	18432	18432	13824	9216	-	6656
		W	1133	1133	907	657	-	561	1233	1233	986	715	-	610	1252	1252	1002	726	-	620	1283	1283	1027	744	-	635
110	43.3	Q(Btu/h)	29233	29233	21925	14616	-	10556	27105	27105	20329	13552	-	9788	24986	24986	18739	12493	-	9023	21959	21959	16469	10979	-	7929
		W	1512	1512	1210	877	-	748	1648	1648	1318	956	-	816	1694	1694	1355	983	-	839	1779	1779	1424	1032	-	881
106	41.1	Q(Btu/h)	32989	32989	24741	16494	-	11913	30587	30587	22940	15293	-	11045	28196	28196	21147	14098	-	10182	24780	24780	18585	12390	-	8948
		W	1843	1843	1475	1069	-	912	2011	2011	1609	1166	-	995	2081	2081	1665	1207	-	1030	1984	1984	1587	1151	-	982
102	38.9	Q(Btu/h)	36218	36218	27163	18109	-	13079	33581	33581	25186	16790	-	12126	30956	30956	23217	15478	-	11178	27205	27205	20404	13603	-	9824
		W	2144	2144	1715	1243	-	1061	2298	2298	1838	1333	-	1137	2418	2418	1934	1402	-	1197	1899	1899	1519	1102	-	940
98	36.7	Q(Btu/h)	38390	38390	28792	19195	-	13863	35595	35595	26696	17798	-	12854	32812	32812	24609	16406	-	11849	28837	28837	21628	14418	-	10413
		W	2488	2488	1990	1443	-	1232	2541	2541	2033	1474	-	1258	2291	2291	1833	1329	-	1134	1793	1793	1434	1040	-	887
94	34.4	Q(Btu/h)	38855	38855	29142	19428	-	14031	36027	36027	27020	18013	-	13010	33210	33210	24908	16605	-	11993	29187	29187	21890	14593	-	10540
		W	2557	2557	2045	1483	-	1266	2461	2461	1969	1427	-	1218	2186	2186	1749	1268	-	1082	1701	1701	1361	987	-	842
90	32.2	Q(Btu/h)	38971	38971	29228	19485	-	14073	36133	36133	27100	18067	-	13048	33308	33308	24981	16654	-	12028	29273	29273	21955	14636	-	10571
		W	2496	2496	1997	1448	-	1235	2365	2365	1892	1372	-	1171	2070	2070	1656	1201	-	1025	1604	1604	1283	930	-	794
86	30.0	Q(Btu/h)	39086	39086	29314	19543	-	14114	36240	36240	27180	18120	-	13087	33407	33407	25055	16703	-	12064	29359	29359	22020	14680	-	10602
		W	2435	2435	1948	1412	-	1205	2270	2270	1816	1316	-	1123	1954	1954	1563	1133	-	967	1507	1507	1205	874	-	746
82	27.8	Q(Btu/h)	39201	39201	29400	19600	-	14156	36347	36347	27260	18173	-	13125	33505	33505	25129	16753	-	12099	29446	29446	22084	14723	-	10633
		W	2374	2374	1899	1377	-	1175	2174	2174	1739	1261	-	1076	1838	1838	1470	1066	-	910	1409	1409	1127	817	-	697
78	25.6	Q(Btu/h)	39316	39316	29487	19658	-	14197	36453	36453	27340	18227	-	13164	33603	33603	25203	16802	-	12135	29532	29532	22149	14766	-	10664
		W	2313	2313	1850	1342	-	1145	2078	2078	1663	1205	-	1029	1722	1722	1377	999	-	852	1312	1312	1049	761	-	649
74	23.3	Q(Btu/h)	39431	39431	29573	19715	-	14239	36560	36560	27420	18280	-	13202	33702	33702	25276	16851	-	12170	29619	29619	22214	14809	-	10696
		W	2252	2252	1802	1306	-	1115	1982	1982	1586	1150	-	981	1606	1606	1284	931	-	795	1214	1214	972	704	-	601
70	21.1	Q(Btu/h)	39546	39546	29659	19773	-	14280	36667	36667	27500	18333	-	13241	33800	33800	25350	16900	-	12206	29705	29705	22279	14853	-	10727
		W	2191	2191	1753	1271	-	1085	1887	1887	1509	1094	-	934	1489	1489	1191	864	-	737	1117	1117	894	648	-	553
66	18.9	Q(Btu/h)	39603	39603	29702	19802	-	14301	36720	36720	27540	18360	-	13260	33849	33849	25387	16925	-	12223	29748	29748	22311	14874	-	10742
		W	2161	2161	1729	1254	-	1070	1839	1839	1471	1067	-	910	1430	1430	1144	829	-	708	1068	1068	854	619	-	528
62	16.7	Q(Btu/h)	39603	39603	29702	19802	-	14301	36720	36720	27540	18360	-	13260	33849	33849	25387	16925	-	12223	29748	29748	22311	14874	-	10742
		W	2163	2163	1730	1254	-	1070	1839	1839	1471	1067	-	910	1427	1427	1142	828	-	706	1066	1066	853	618	-	528
58	14.4	Q(Btu/h)	39603	39603	29702	19802	-	14301	36720	36720	27540	18360	-	13260	33849	33849	25387	16925	-	12223	29748	29748	22311	14874	-	10742
		W	2164	2164	1731	1255	-	1071	1839	1839	1471	1067	-	910	1424	1424	1140	826	-	705	1065	1065	852	618	-	527
54	12.2	Q(Btu/h)	39603	39603	29702	19802	-	14301	36720	36720	27540	18360	-	13260	33849	33849	25387	16925	-	12223	29748	29748	22311	14874	-	10742
		W	2165	2165	1732	1256	-	1072	1839	1839	1471	1067	-	910	1422	1422	1137	825	-	704	1063	1063	851	617	-	526
50	10.0	Q(Btu/h)	39603	39603	29702	19802	-	14301	36720	36720	27540	18360	-	13260	33849	33849	25387	16925	-	12223	29748	29748	22311	14874	-	10742
		W	2166	2166	1733	1256	-	1072	1839	1839	1471	1067	-	910	1419	1419	1135	823	-	702	1062	1062	850	616	-	526
46	7.8	Q(Btu/h)	39603	39603	29702	19802	-	14301	36720	36720	27540	18360	-	13260	33849	33849	25387	16925	-	12223	29748	29748	22311	14874	-	10742
		W	2167	2167	1734	1257	-	1073	1839	1839	1471	1067	-	910	1416	1416	1133	821	-	701	1061	1061	849	615	-	525
42	5.6	Q(Btu/h)	39603	39603	29702	19802	-	14301	36720	36720	27540	18360	-	13260	33849	33849	25387	16925	-	12223	29748	29748	22311	14874	-	10742
		W	2169	2169	1735	1258	-	1073	1839	1839	1471	1067	-	910	1413	1413	1131	820	-	700	1059	1059	847	614	-	524
38	3.3	Q(Btu/h)	39603	39603	29702	19802	-	14301	36720	36720	27540	18360	-	13260	33849	33849	25387	16925	-	12223	29748	29748	22311	14874	-	10742
		W	2170	2170	1736	1258	-	1074	1839	1839	1471	1067	-	910	1411	1411	1129	818	-	698	1058	1058	846	614	-	524
34	1.1	Q(Btu/h)	39603	39603	29702	19802	-	14301	36720	36720	27540	18360	-	13260	33849	33849	25387	16925	-	12223	29748	29748	22311	14874	-	10742
		W	2171	2171	1737	1259	-	1075	1839	1839	1471	1067	-	910	1408	1408	1126	817	-	697	1056	1056	845	613	-	523
30	-1.1	Q(Btu/h)	39603	39603	29702	19802	-	14301	36720	36720	27540	18360	-	13260	33849	33849	25387	16925	-	12223	29748	29748	22311	14874	-	10742
		W	2172	2172	1738	1260	-	1075	1839	1839	1471	1067	-	910	1405	1405	1124	815	-	696	1055	1055	844	612	-	522
26	-3.3	Q(Btu/h)	39603	39603	29702	19802	-	14301	36720	36720	27540	18360	-	13260	33849	33849	25387	16925	-	12223	29748	29748	22311	14874	-	10742
		W	2173	2173	1739	1261	-	1076	1839	1839	1471	1067	-	910	1403	1403	1122	813	-	694	1054	1054	843	611	-	522
23	-5.0	Q(Btu/h)	39603	39603	29702	19802	-	14301	36720	36720	27540	18360	-	13260	33849	33849	25387	16925	-	12223	29748	29748	22311	14874	-	10742
		W	2174	2174	1740	1261	-	1076	1839	1839	1471	1067	-	910	1400	1400	1120	812	-	693	1053	1053	842	611	-	521
18	-7.8	Q(Btu/h)	39603	39603	29702	19802	-	14301	36720	36720	27540	18360	-	13260	33849	33849	25387	16925	-	12223	29748	29748	22311	14874	-	10742
		W	2174	2174	1740	1261	-	1076	1839	1839	1471	1067	-	910	1400	1400	1120	812	-	693	1053	1053	842	611	-	521
14	-10.0	Q(Btu/h)	39658	39658	29702	19802	-	14301	36720	36720	27540	18360	-	13260	33849	33849	25387	16925	-	12223	29748	29748	22311	14874	-	10742
		W	2174	2174	1740	1261	-	1076	1839	1839	1471	1067	-	910	1400	1400	1120	812	-	693	1053	1053	842	611	-	521
10	-12.2	Q(Btu/h)	39603	39603	29702	19802	-	14301	36720	36720	27540	18360	-	13260	33849	33849	25387	16925	-	12223	29748	29748	22311	14874	-	10742
		W	2174	2174	1740	1261	-	1076	1839	1839	1471	1067	-	910	1400	1400	1120	812	-	693	1053	1053	842	611	-	521
6	-14.4	Q(Btu/h)	39603	39603	29702	19802	-	14301	36720	36720	27540	18360	-	13260	33849	33849	25387	16925	-	12223	29748	29748	22311	14874	-	10742
		W	2174	2174	1740	1261	-	1076	1839	1839	1471	1067	-	910	1400	1400	1120	812	-	693	1053	1053	842	611	-	521

MXZ-SM36NLHZ-U1

2) Heating

Rated	
Q (Btu/h)	42000
W	3080

Indoor D.B.			79°F / 26.0°C						70°F / 21.1°C						61°F / 16.0°C					
Out-door W.B. (°F)	Out-door W.B. (°C)		Max	Rated	75%	50%	25%	Min	Max	Rated	75%	50%	25%	Min	Max	Rated	75%	50%	25%	Min
60	15.6	Q(Btu/h)	34097	34097	25573	17049	-	10229	42000	42000	31500	21000	-	12600	50225	50225	37669	25113	-	15068
		W	1562	1562	1250	906	-	555	2108	2108	1686	1223	-	749	1902	1902	1522	1103	-	676
55	12.8	Q(Btu/h)	34097	34097	25573	17049	-	10229	42000	42000	31500	21000	-	12600	50225	50225	37669	25113	-	15068
		W	1730	1730	1384	1003	-	615	2348	2348	1878	1362	-	835	2131	2131	1705	1236	-	758
50	10.0	Q(Btu/h)	34097	34097	25573	17049	-	10229	42000	42000	31500	21000	-	12600	50225	50225	37669	25113	-	15068
		W	1897	1897	1518	1100	-	675	2587	2587	2070	1501	-	920	2360	2360	1888	1369	-	839
47	8.3	Q(Btu/h)	34097	34097	25573	17049	-	10229	42000	42000	31500	21000	-	12600	50225	50225	37669	25113	-	15068
		W	2016	2016	1613	1169	-	717	2798	2798	2239	1623	-	995	2530	2530	2024	1467	-	899
42	5.6	Q(Btu/h)	34624	34624	25968	17312	-	10387	42649	42649	31987	21324	-	12795	51001	51001	38251	25501	-	15300
		W	2208	2208	1766	1280	-	785	3111	3111	2489	1804	-	1106	2792	2792	2234	1619	-	993
35	1.7	Q(Btu/h)	38457	38457	28843	19228	-	11537	47370	47370	35527	23685	-	14211	56647	56647	42485	28323	-	16994
		W	2441	2441	1952	1415	-	868	3326	3326	2661	1929	-	1183	3050	3050	2440	1769	-	1084
32	0.0	Q(Btu/h)	38660	38660	28995	19330	-	11598	47620	47620	35715	23810	-	14286	56946	56946	42709	28473	-	17084
		W	2540	2540	2032	1473	-	903	3432	3432	2746	1991	-	1220	3160	3160	2528	1833	-	1123
27	-2.8	Q(Btu/h)	38226	38226	28670	19113	-	11468	47086	47086	35315	23543	-	14126	56307	56307	42231	28154	-	16892
		W	2703	2703	2162	1568	-	961	3654	3654	2923	2119	-	1299	3344	3344	2675	1939	-	1189
22	-5.6	Q(Btu/h)	37412	37412	28059	18706	-	11224	46083	46083	34563	23042	-	13825	55108	55108	41331	27554	-	16532
		W	2903	2903	2322	1684	-	1032	3896	3896	3117	2260	-	1385	3518	3518	2814	2040	-	1251
17	-8.3	Q(Btu/h)	35044	35044	26283	17522	-	10513	43167	43167	32375	21583	-	12950	51620	51620	38715	25810	-	15486
		W	3249	3249	2600	1885	-	1155	4220	4220	3376	2447	-	1500	3653	3653	2923	2119	-	1299
12	-11.1	Q(Btu/h)	34097	34097	25573	17049	-	10229	42000	42000	31500	21000	-	12600	50225	50225	37669	25113	-	15068
		W	3693	3693	2954	2142	-	1313	4555	4555	3644	2642	-	1619	3773	3773	3018	2188	-	1341
5	-15.0	Q(Btu/h)	34097	34097	25573	17049	-	10229	42000	42000	31500	21000	-	12600	50225	50225	37669	25113	-	15068
		W	4404	4404	3524	2555	-	1566	5035	5035	4028	2920	-	1790	3925	3925	3140	2276	-	1395
2	-16.7	Q(Btu/h)	34097	34097	25573	17049	-	10229	42000	42000	31500	21000	-	12600	50225	50225	37669	25113	-	15068
		W	4579	4579	3663	2656	-	1628	4915	4915	3932	2850	-	1747	3714	3714	2971	2154	-	1320
-3	-19.4	Q(Btu/h)	34097	34097	25573	17049	-	10229	42000	42000	31500	21000	-	12600	50225	50225	37669	25113	-	15068
		W	4870	4870	3896	2824	-	1731	4714	4714	3771	2734	-	1676	3363	3363	2690	1950	-	1196
-8	-22.2	Q(Btu/h)	34097	34097	25573	17049	-	10229	42000	42000	31500	21000	-	12600	50225	50225	37669	25113	-	15068
		W	5174	5174	4140	3001	-	1840	4500	4500	3600	2610	-	1600	2989	2989	2391	1734	-	1063
-13	-25.0	Q(Btu/h)	34097	34097	25573	17049	-	10229	42000	42000	31500	21000	-	12600	50225	50225	37669	25113	-	15068
		W	4928	4928	3942	2858	-	1752	4312	4312	3450	2501	-	1533	2661	2661	2129	1543	-	946

MXZ-SM42NLHZ-U1

1) Cooling

Rated	
Q (Btu/h)	42000
W	3135

Indoor W.B.			72°F / 22.0°C						67°F / 19.4°C						64°F / 18.0°C						61°F / 16.0°C					
Out-door D.B. (°F)	Out-door D.B. (°C)		Max	Rated	75%	50%	25%	Min	Max	Rated	75%	50%	25%	Min	Max	Rated	75%	50%	25%	Min	Max	Rated	75%	50%	25%	Min
115	46.1	Q(Btu/h)	28628	28628	21471	14314	-	9543	26544	26544	19908	13272	-	8848	24469	24469	18352	12234	-	8156	21504	21504	16128	10752	-	7168
		W	1430	1430	1144	829	-	568	1555	1555	1244	902	-	618	1580	1580	1264	916	-	627	1619	1619	1295	939	-	643
110	43.3	Q(Btu/h)	34105	34105	25579	17053	-	11368	31622	31622	23717	15811	-	10541	29150	29150	21863	14575	-	9717	25618	25618	19214	12809	-	8539
		W	1907	1907	1526	1106	-	758	2079	2079	1663	1206	-	826	2137	2137	1710	1240	-	849	2245	2245	1796	1302	-	891
106	41.1	Q(Btu/h)	38487	38487	28865	19243	-	12829	35685	35685	26764	17842	-	11895	32895	32895	24671	16447	-	10965	28910	28910	21682	14455	-	9637
		W	2326	2326	1861	1349	-	924	2537	2537	2030	1472	-	1008	2625	2625	2100	1523	-	1042	2503	2503	2003	1452	-	994
102	38.9	Q(Btu/h)	42254	42254	31690	21127	-	14085	39178	39178	29383	19589	-	13059	36115	36115	27086	18057	-	12038	31739	31739	23804	15870	-	10580
		W	2704	2704	2164	1569	-	1074	2899	2899	2319	1681	-	1151	3050	3050	2440	1769	-	1211	2396	2396	1917	1390	-	952
98	36.7	Q(Btu/h)	44788	44788	33591	22394	-	14929	41528	41528	31146	20764	-	13843	38281	38281	28711	19140	-	12760	33643	33643	25232	16822	-	11214
		W	3139	3139	2511	1821	-	1247	3206	3206	2564	1859	-	1273	2891	2891	2312	1677	-	1148	2262	2262	1809	1312	-	898
94	34.4	Q(Btu/h)	45331	45331	33999	22666	-	15110	42031	42031	31523	21016	-	14010	38745	38745	29059	19373	-	12915	34051	34051	25538	17026	-	11350
		W	3226	3226	2580	1871	-	1281	3105	3105	2484	1801	-	1233	2758	2758	2207	1600	-	1095	2146	2146	1717	1245	-	852
90	32.2	Q(Btu/h)	45466	45466	34099	22733	-	15155	42156	42156	31617	21078	-	14052	38860	38860	29145	19430	-	12953	34152	34152	25614	17076	-	11384
		W	3149	3149	2519	1826	-	1250	2984	2984	2387	1731	-	1185	2612	2612	2089	1515	-	1037	2023	2023	1619	1174	-	804
86	30.0	Q(Btu/h)	45600	45600	34200	22800	-	15200	42280	42280	31710	21140	-	14093	38975	38975	29231	19487	-	12992	34253	34253	25689	17126	-	11418
		W	3072	3072	2457	1782	-	1220	2863	2863	2291	1661	-	1137	2465	2465	1972	1430	-	979	1901	1901	1520	1102	-	755
82	27.8	Q(Btu/h)	45734	45734	34301	22867	-	15245	42404	42404	31803	21202	-	14135	39089	39089	29317	19545	-	13030	34353	34353	25765	17177	-	11451
		W	2995	2995	2396	1737	-	1189	2743	2743	2194	1591	-	1089	2319	2319	1855	1345	-	921	1778	1778	1422	1031	-	706
78	25.6	Q(Btu/h)	45868	45868	34401	22934	-	15289	42529	42529	31897	21264	-	14176	39204	39204	29403	19602	-	13068	34454	34454	25841	17227	-	11485
		W	2918	2918	2334	1692	-	1159	2622	2622	2097	1521	-	1041	2172	2172	1738	1260	-	863	1655	1655	1324	960	-	657
74	23.3	Q(Btu/h)	46002	46002	34502	23001	-	15334	42653	42653	31990	21327	-	14218	39319	39319	29489	19659	-	13106	34555	34555	25916	17278	-	11518
		W	2841	2841	2273	1648	-	1128	2501	2501	2001	1451	-	993	2025	2025	1620	1175	-	804	1532	1532	1226	889	-	608
70	21.1	Q(Btu/h)	46137	46137	34603	23068	-	15379	42778	42778	32083	21389	-	14259	39433	39433	29575	19717	-	13144	34656	34656	25992	17328	-	11552
		W	2764	2764	2211	1603	-	1098	2380	2380	1904	1381	-	945	1879	1879	1503	1090	-	746	1409	1409	1127	817	-	560
66	18.9	Q(Btu/h)	46204	46204	34653	23102	-	15401	42840	42840	32130	21420	-	14280	39491	39491	29618	19745	-	13164	34706	34706	26030	17353	-	11569
		W	2727	2727	2181	1581	-	1083	2320	2320	1856	1346	-	921	1804	1804	1443	1046	-	716	1347	1347	1078	781	-	535
62	16.7	Q(Btu/h)	46204	46204	34653	23102	-	15401	42840	42840	32130	21420	-	14280	39491	39491	29618	19745	-	13164	34706	34706	26030	17353	-	11569
		W	2728	2728	2183	1582	-	1083	2320	2320	1856	1346	-	921	1800	1800	1440	1044	-	715	1345	1345	1076	780	-	534
58	14.4	Q(Btu/h)	46204	46204	34653	23102	-	15401	42840	42840	32130	21420	-	14280	39491	39491	29618	19745	-	13164	34706	34706	26030	17353	-	11569
		W	2730	2730	2184	1583	-	1084	2320	2320	1856	1346	-	921	1797	1797	1438	1042	-	714	1343	1343	1075	779	-	534
54	12.2	Q(Btu/h)	46204	46204	34653	23102	-	15401	42840	42840	32130	21420	-	14280	39491	39491	29618	19745	-	13164	34706	34706	26030	17353	-	11569
		W	2731	2731	2185	1584	-	1085	2320	2320	1856	1346	-	921	1794	1794	1435	1040	-	712	1342	1342	1073	778	-	533
50	10.0	Q(Btu/h)	46204	46204	34653	23102	-	15401	42840	42840	32130	21420	-	14280	39491	39491	29618	19745	-	13164	34706	34706	26030	17353	-	11569
		W	2733	2733	2186	1585	-	1085	2320	2320	1856	1346	-	921	1790	1790	1432	1038	-	711	1340	1340	1072	777	-	532
46	7.8	Q(Btu/h)	46204	46204	34653	23102	-	15401	42840	42840	32130	21420	-	14280	39491	39491	29618	19745	-	13164	34706	34706	26030	17353	-	11569
		W	2734	2734	2187	1586	-	1086	2320	2320	1856	1346	-	921	1787	1787	1429	1036	-	710	1338	1338	1070	776	-	531
42	5.6	Q(Btu/h)	46204	46204	34653	23102	-	15401	42840	42840	32130	21420	-	14280	39491	39491	29618	19745	-	13164	34706	34706	26030	17353	-	11569
		W	2736	2736	2189	1587	-	1086	2320	2320	1856	1346	-	921	1783	1783	1427	1034	-	708	1336	1336	1069	775	-	531
38	3.3	Q(Btu/h)	46204	46204	34653	23102	-	15401	42840	42840	32130	21420	-	14280	39491	39491	29618	19745	-	13164	34706	34706	26030	17353	-	11569
		W	2737	2737	2190	1588	-	1087	2320	2320	1856	1346	-	921	1780	1780	1424	1032	-	707	1335	1335	1068	774	-	530
34	1.1	Q(Btu/h)	46204	46204	34653	23102	-	15401	42840	42840	32130	21420	-	14280	39491	39491	29618	19745	-	13164	34706	34706	26030	17353	-	11569
		W	2739	2739	2191	1589	-	1088	2320	2320	1856	1346	-	921	1776	1776	1421	1030	-	705	1333	1333	1066	773	-	529
30	-1.1	Q(Btu/h)	46204	46204	34653	23102	-	15401	42840	42840	32130	21420	-	14280	39491	39491	29618	19745	-	13164	34706	34706	26030	17353	-	11569
		W	2740	2740	2192	1589	-	1088	2320	2320	1856	1346	-	921	1773	1773	1418	1028	-	704	1331	1331	1065	772	-	529
26	-3.3	Q(Btu/h)	46204	46204	34653	23102	-	15401	42840	42840	32130	21420	-	14280	39491	39491	29618	19745	-	13164	34706	34706	26030	17353	-	11569
		W	2742	2742	2194	1590	-	1089	2320	2320	1856	1346	-	921	1769	1769	1416	1026	-	703	1329	1329	1063	771	-	528
23	-5.0	Q(Btu/h)	46204	46204	34653	23102	-	15401	42840	42840	32130	21420	-	14280	39491	39491	29618	19745	-	13164	34706	34706	26030	17353	-	11569
		W	2743	2743	2195	1591	-	1089	2320	2320	1856	1346	-	921	1767	1767	1413	1025	-	702	1328	1328	1062	770	-	527
18	-7.8	Q(Btu/h)	46204	46204	34653	23102	-	15401	42840	42840	32130	21420	-	14280	39491	39491	29618	19745	-	13164	34706	34706	26030	17353	-	11569
		W	2743	2743	2195	1591	-	1089	2320	2320	1856	1346	-	921	1767	1767	1413	1025	-	702	1328	1328	1062	770	-	527
14	-10.0	Q(Btu/h)	46267	46267	34653	23102	-	15401	42840	42840	32130	21420	-	14280	39491	39491	29618	19745	-	13164	34706	34706	26030	17353	-	11569
		W	2743	2743	2195	1591	-	1089	2320	2320	1856	1346	-	921	1767	1767	1413	1025	-	702	1328	1328	1062	770	-	527
10	-12.2	Q(Btu/h)	46204	46204	34653	23102	-	15401	42840	42840	32130	21420	-	14280	39491	39491	29618	19745	-	13164	34706	34706	26030	17353	-	11569
		W	2743	2743	2195	1591	-	1089	2320	2320	1856	1346	-	921	1767	1767	1413	1025	-	702	1328	1328	1062	770	-	527
6	-14.4	Q(Btu/h)	46204	46204	34653	23102	-	15401	42840	42840	32130	21420	-	14280	39491	39491	29618	19745	-	13164	34706	34706	26030	17353	-	11569
		W	2743	2743	2195	1591	-	1089	2320	2320	1856	1346	-	921	1767	1767	1413	1025	-	702	1328	1328	1062	770	-	527

MXZ-SM42NLHZ-U1

2) Heating

Rated	
Q (Btu/h)	48000
W	3435

Indoor D.B.			79°F / 26.0°C						70°F / 21.1°C						61°F / 16.0°C					
Out-door W.B. (°F)	Out-door W.B. (°C)		Max	Rated	75%	50%	25%	Min	Max	Rated	75%	50%	25%	Min	Max	Rated	75%	50%	25%	Min
60	15.6	Q(Btu/h)	38968	38968	29226	19484	-	10392	48000	48000	36000	24000	-	12800	57400	57400	43050	28700	-	15307
		W	1742	1742	1394	1010	-	573	2351	2351	1881	1364	-	773	2121	2121	1697	1230	-	698
55	12.8	Q(Btu/h)	38968	38968	29226	19484	-	10392	48000	48000	36000	24000	-	12800	57400	57400	43050	28700	-	15307
		W	1929	1929	1543	1119	-	635	2618	2618	2095	1519	-	861	2377	2377	1901	1379	-	782
50	10.0	Q(Btu/h)	38968	38968	29226	19484	-	10392	48000	48000	36000	24000	-	12800	57400	57400	43050	28700	-	15307
		W	2116	2116	1693	1227	-	696	2885	2885	2308	1674	-	949	2632	2632	2106	1527	-	866
47	8.3	Q(Btu/h)	38968	38968	29226	19484	-	10392	48000	48000	36000	24000	-	12800	57400	57400	43050	28700	-	15307
		W	2248	2248	1799	1304	-	740	3121	3121	2497	1810	-	1027	2821	2821	2257	1636	-	928
42	5.6	Q(Btu/h)	39570	39570	29678	19785	-	10552	48742	48742	36556	24371	-	12998	58287	58287	43715	29144	-	15543
		W	2462	2462	1970	1428	-	810	3469	3469	2775	2012	-	1141	3114	3114	2491	1806	-	1024
35	1.7	Q(Btu/h)	43950	43950	32963	21975	-	11720	54137	54137	40603	27068	-	14436	64739	64739	48554	32370	-	17264
		W	2722	2722	2177	1579	-	895	3710	3710	2968	2152	-	1220	3401	3401	2721	1973	-	1119
32	0.0	Q(Btu/h)	44183	44183	33137	22091	-	11782	54423	54423	40817	27211	-	14513	65081	65081	48811	32541	-	17355
		W	2832	2832	2266	1643	-	932	3828	3828	3062	2220	-	1259	3524	3524	2819	2044	-	1159
27	-2.8	Q(Btu/h)	43687	43687	32765	21844	-	11650	53813	53813	40360	26906	-	14350	64351	64351	48264	32176	-	17160
		W	3015	3015	2412	1748	-	992	4075	4075	3260	2364	-	1341	3729	3729	2983	2163	-	1227
22	-5.6	Q(Btu/h)	42757	42757	32068	21378	-	11402	52667	52667	39500	26333	-	14044	62981	62981	47236	31490	-	16795
		W	3237	3237	2590	1878	-	1065	4345	4345	3476	2520	-	1429	3923	3923	3139	2276	-	1291
17	-8.3	Q(Btu/h)	40051	40051	30038	20025	-	10680	49333	49333	37000	24667	-	13156	58995	58995	44246	29497	-	15732
		W	3624	3624	2899	2102	-	1192	4706	4706	3765	2729	-	1548	4075	4075	3260	2363	-	1340
12	-11.1	Q(Btu/h)	38968	38968	29226	19484	-	10392	48000	48000	36000	24000	-	12800	57400	57400	43050	28700	-	15307
		W	4119	4119	3295	2389	-	1355	5080	5080	4064	2946	-	1671	4208	4208	3366	2440	-	1384
5	-15.0	Q(Btu/h)	38968	38968	29226	19484	-	10392	48000	48000	36000	24000	-	12800	57400	57400	43050	28700	-	15307
		W	4912	4912	3930	2849	-	1616	5615	5615	4492	3257	-	1847	4377	4377	3502	2539	-	1440
2	-16.7	Q(Btu/h)	38968	38968	29226	19484	-	10392	48000	48000	36000	24000	-	12800	57400	57400	43050	28700	-	15307
		W	5107	5107	4085	2962	-	1680	5481	5481	4385	3179	-	1803	4142	4142	3314	2402	-	1363
-3	-19.4	Q(Btu/h)	38968	38968	29226	19484	-	10392	48000	48000	36000	24000	-	12800	57400	57400	43050	28700	-	15307
		W	5431	5431	4345	3150	-	1787	5257	5257	4206	3049	-	1729	3750	3750	3000	2175	-	1234
-8	-22.2	Q(Btu/h)	38968	38968	29226	19484	-	10392	48000	48000	36000	24000	-	12800	57400	57400	43050	28700	-	15307
		W	5771	5771	4617	3347	-	1898	5019	5019	4015	2911	-	1651	3334	3334	2667	1934	-	1097
-13	-25.0	Q(Btu/h)	38968	38968	29226	19484	-	10392	48000	48000	36000	24000	-	12800	57400	57400	43050	28700	-	15307
		W	5496	5496	4397	3188	-	1808	4809	4809	3847	2789	-	1582	2967	2967	2374	1721	-	976

MXZ-SM48NLHZ-U1

1) Cooling

Rated	
Q (Btu/h)	48000
W	3665

Indoor W.B.			72°F / 22.0°C						67°F / 19.4°C						64°F / 18.0°C						61°F / 16.0°C					
Out-door D.B. (°F)	Out-door D.B. (°C)		Max	Rated	75%	50%	25%	Min	Max	Rated	75%	50%	25%	Min	Max	Rated	75%	50%	25%	Min	Max	Rated	75%	50%	25%	Min
115	46.1	Q(Btu/h)	32718	32718	24538	16359	-	10224	30336	30336	22752	15168	-	9480	27964	27964	20973	13982	-	8739	24576	24576	18432	12288	-	7680
		W	1671	1671	1337	969	-	559	1818	1818	1454	1054	-	608	1847	1847	1478	1071	-	617	1893	1893	1514	1098	-	633
110	43.3	Q(Btu/h)	38977	38977	29233	19489	-	12180	36140	36140	27105	18070	-	11294	33314	33314	24986	16657	-	10411	29278	29278	21959	14639	-	9149
		W	2230	2230	1784	1293	-	745	2430	2430	1944	1410	-	812	2499	2499	1999	1449	-	835	2624	2624	2099	1522	-	877
106	41.1	Q(Btu/h)	43985	43985	32989	21992	-	13745	40783	40783	30587	20391	-	12745	37594	37594	28196	18797	-	11748	33040	33040	24780	16520	-	10325
		W	2719	2719	2175	1577	-	909	2966	2966	2373	1720	-	991	3069	3069	2455	1780	-	1026	2927	2927	2341	1697	-	978
102	38.9	Q(Btu/h)	48290	48290	36218	24145	-	15091	44774	44774	33581	22387	-	13992	41274	41274	30956	20637	-	12898	36273	36273	27205	18137	-	11335
		W	3162	3162	2529	1834	-	1057	3389	3389	2711	1966	-	1133	3566	3566	2852	2068	-	1192	2801	2801	2241	1625	-	936
98	36.7	Q(Btu/h)	51187	51187	38390	25593	-	15996	47460	47460	35595	23730	-	14831	43750	43750	32812	21875	-	13672	38449	38449	28837	19225	-	12015
		W	3670	3670	2936	2128	-	1227	3747	3747	2998	2174	-	1253	3379	3379	2703	1960	-	1130	2644	2644	2115	1534	-	884
94	34.4	Q(Btu/h)	51807	51807	38855	25904	-	16190	48036	48036	36027	24018	-	15011	44280	44280	33210	22140	-	13838	38915	38915	29187	19458	-	12161
		W	3771	3771	3017	2187	-	1260	3630	3630	2904	2105	-	1213	3225	3225	2580	1870	-	1078	2509	2509	2007	1455	-	839
90	32.2	Q(Btu/h)	51961	51961	38971	25980	-	16238	48178	48178	36133	24089	-	15056	44411	44411	33308	22206	-	13879	39031	39031	29273	19515	-	12197
		W	3681	3681	2945	2135	-	1230	3489	3489	2791	2023	-	1166	3053	3053	2443	1771	-	1021	2365	2365	1892	1372	-	791
86	30.0	Q(Btu/h)	52114	52114	39086	26057	-	16286	48320	48320	36240	24160	-	15100	44542	44542	33407	22271	-	13920	39146	39146	29359	19573	-	12233
		W	3591	3591	2873	2083	-	1200	3347	3347	2678	1941	-	1119	2882	2882	2306	1672	-	963	2222	2222	1778	1289	-	743
82	27.8	Q(Btu/h)	52267	52267	39201	26134	-	16334	48462	48462	36347	24231	-	15144	44674	44674	33505	22337	-	13960	39261	39261	29446	19631	-	12269
		W	3501	3501	2801	2031	-	1170	3206	3206	2565	1860	-	1072	2711	2711	2169	1572	-	906	2078	2078	1663	1205	-	695
78	25.6	Q(Btu/h)	52421	52421	39316	26210	-	16382	48604	48604	36453	24302	-	15189	44805	44805	33603	22402	-	14001	39376	39376	29532	19688	-	12305
		W	3411	3411	2729	1979	-	1140	3065	3065	2452	1778	-	1024	2539	2539	2031	1473	-	849	1935	1935	1548	1122	-	647
74	23.3	Q(Btu/h)	52574	52574	39431	26287	-	16429	48747	48747	36560	24373	-	15233	44936	44936	33702	22468	-	14042	39492	39492	29619	19746	-	12341
		W	3322	3322	2657	1926	-	1110	2924	2924	2339	1696	-	977	2368	2368	1894	1373	-	791	1791	1791	1433	1039	-	599
70	21.1	Q(Btu/h)	52728	52728	39546	26364	-	16477	48889	48889	36667	24444	-	15278	45067	45067	33800	22533	-	14083	39607	39607	29705	19803	-	12377
		W	3232	3232	2585	1874	-	1080	2783	2783	2226	1614	-	930	2197	2197	1757	1274	-	734	1647	1647	1318	956	-	551
66	18.9	Q(Btu/h)	52804	52804	39603	26402	-	16501	48960	48960	36720	24480	-	15300	45132	45132	33849	22566	-	14104	39664	39664	29748	19832	-	12395
		W	3188	3188	2550	1849	-	1065	2712	2712	2170	1573	-	907	2109	2109	1687	1223	-	705	1575	1575	1260	913	-	526
62	16.7	Q(Btu/h)	52804	52804	39603	26402	-	16501	48960	48960	36720	24480	-	15300	45132	45132	33849	22566	-	14104	39664	39664	29748	19832	-	12395
		W	3189	3189	2552	1850	-	1066	2712	2712	2170	1573	-	907	2105	2105	1684	1221	-	704	1573	1573	1258	912	-	526
58	14.4	Q(Btu/h)	52804	52804	39603	26402	-	16501	48960	48960	36720	24480	-	15300	45132	45132	33849	22566	-	14104	39664	39664	29748	19832	-	12395
		W	3191	3191	2553	1851	-	1067	2712	2712	2170	1573	-	907	2101	2101	1681	1218	-	702	1571	1571	1256	911	-	525
54	12.2	Q(Btu/h)	52804	52804	39603	26402	-	16501	48960	48960	36720	24480	-	15300	45132	45132	33849	22566	-	14104	39664	39664	29748	19832	-	12395
		W	3193	3193	2554	1852	-	1067	2712	2712	2170	1573	-	907	2097	2097	1677	1216	-	701	1568	1568	1255	910	-	524
50	10.0	Q(Btu/h)	52804	52804	39603	26402	-	16501	48960	48960	36720	24480	-	15300	45132	45132	33849	22566	-	14104	39664	39664	29748	19832	-	12395
		W	3195	3195	2556	1853	-	1068	2712	2712	2170	1573	-	907	2093	2093	1674	1214	-	699	1566	1566	1253	909	-	524
46	7.8	Q(Btu/h)	52804	52804	39603	26402	-	16501	48960	48960	36720	24480	-	15300	45132	45132	33849	22566	-	14104	39664	39664	29748	19832	-	12395
		W	3197	3197	2557	1854	-	1068	2712	2712	2170	1573	-	907	2089	2089	1671	1211	-	698	1564	1564	1251	907	-	523
42	5.6	Q(Btu/h)	52804	52804	39603	26402	-	16501	48960	48960	36720	24480	-	15300	45132	45132	33849	22566	-	14104	39664	39664	29748	19832	-	12395
		W	3198	3198	2559	1855	-	1069	2712	2712	2170	1573	-	907	2085	2085	1668	1209	-	697	1562	1562	1250	906	-	522
38	3.3	Q(Btu/h)	52804	52804	39603	26402	-	16501	48960	48960	36720	24480	-	15300	45132	45132	33849	22566	-	14104	39664	39664	29748	19832	-	12395
		W	3200	3200	2560	1856	-	1070	2712	2712	2170	1573	-	907	2081	2081	1664	1207	-	695	1560	1560	1248	905	-	521
34	1.1	Q(Btu/h)	52804	52804	39603	26402	-	16501	48960	48960	36720	24480	-	15300	45132	45132	33849	22566	-	14104	39664	39664	29748	19832	-	12395
		W	3202	3202	2562	1857	-	1070	2712	2712	2170	1573	-	907	2077	2077	1661	1204	-	694	1558	1558	1247	904	-	521
30	-1.1	Q(Btu/h)	52804	52804	39603	26402	-	16501	48960	48960	36720	24480	-	15300	45132	45132	33849	22566	-	14104	39664	39664	29748	19832	-	12395
		W	3204	3204	2563	1858	-	1071	2712	2712	2170	1573	-	907	2073	2073	1658	1202	-	693	1556	1556	1245	903	-	520
26	-3.3	Q(Btu/h)	52804	52804	39603	26402	-	16501	48960	48960	36720	24480	-	15300	45132	45132	33849	22566	-	14104	39664	39664	29748	19832	-	12395
		W	3206	3206	2564	1859	-	1071	2712	2712	2170	1573	-	907	2069	2069	1655	1200	-	691	1554	1554	1243	901	-	519
23	-5.0	Q(Btu/h)	52804	52804	39603	26402	-	16501	48960	48960	36720	24480	-	15300	45132	45132	33849	22566	-	14104	39664	39664	29748	19832	-	12395
		W	3207	3207	2566	1860	-	1072	2712	2712	2170	1573	-	907	2065	2065	1652	1198	-	690	1552	1552	1242	900	-	519
18	-7.8	Q(Btu/h)	52804	52804	39603	26402	-	16501	48960	48960	36720	24480	-	15300	45132	45132	33849	22566	-	14104	39664	39664	29748	19832	-	12395
		W	3207	3207	2566	1860	-	1072	2712	2712	2170	1573	-	907	2065	2065	1652	1198	-	690	1552	1552	1242	900	-	519
14	-10.0	Q(Btu/h)	52877	52877	39603	26402	-	16501	48960	48960	36720	24480	-	15300	45132	45132	33849	22566	-	14104	39664	39664	29748	19832	-	12395
		W	3207	3207	2566	1860	-	1072	2712	2712	2170	1573	-	907	2065	2065	1652	1198	-	690	1552	1552	1242	900	-	519
10	-12.2	Q(Btu/h)	52804	52804	39603	26402	-	16501	48960	48960	36720	24480	-	15300	45132	45132	33849	22566	-	14104	39664	39664	29748	19832	-	12395
		W	3207	3207	2566	1860	-	1072	2712	2712	2170	1573	-	907	2065	2065	1652	1198	-	690	1552	1552	1242	900	-	519
6	-14.4	Q(Btu/h)	52804	52804	39603	26402	-	16501	48960	48960	36720	24480	-	15300	45132	45132	33849	22566	-	14104	39664	39664	29748	19832	-	12395
		W	3207	3207	2566	1860	-	1072	2712	2712	2170	1573	-	907	2065	2065	1652	1198	-	690	1552	1552	1242	900	-	519

MXZ-SM48NLHZ-U1

2) Heating

Rated	
Q (Btu/h)	54000
W	3960

Indoor D.B.			79°F / 26.0°C						70°F / 21.1°C						61°F / 16.0°C					
Out-door W.B. (°F)	Out-door W.B. (°C)		Max	Rated	75%	50%	25%	Min	Max	Rated	75%	50%	25%	Min	Max	Rated	75%	50%	25%	Min
60	15.6	Q(Btu/h)	43839	43839	32880	21920	10960	10554	54000	54000	40500	27000	13500	13000	64575	64575	48432	32288	16144	15546
		W	2008	2008	1607	1165	763	598	2710	2710	2168	1572	1030	808	2446	2446	1957	1419	929	729
55	12.8	Q(Btu/h)	43839	43839	32880	21920	10960	10554	54000	54000	40500	27000	13500	13000	64575	64575	48432	32288	16144	15546
		W	2224	2224	1779	1290	845	663	3018	3018	2415	1751	1147	899	2740	2740	2192	1589	1041	816
50	10.0	Q(Btu/h)	43839	43839	32880	21920	10960	10554	54000	54000	40500	27000	13500	13000	64575	64575	48432	32288	16144	15546
		W	2439	2439	1951	1415	927	727	3326	3326	2661	1929	1264	991	3034	3034	2428	1760	1153	904
47	8.3	Q(Btu/h)	43839	43839	32880	21920	10960	10554	54000	54000	40500	27000	13500	13000	64575	64575	48432	32288	16144	15546
		W	2592	2592	2074	1503	985	772	3598	3598	2878	2087	1367	1072	3252	3252	2602	1886	1236	969
42	5.6	Q(Btu/h)	44517	44517	33387	22258	11129	10717	54834	54834	41126	27417	13709	13201	65573	65573	49180	32787	16393	15786
		W	2839	2839	2271	1646	1079	846	4000	4000	3200	2320	1520	1192	3590	3590	2872	2082	1364	1070
35	1.7	Q(Btu/h)	49444	49444	37083	24722	12361	11903	60904	60904	45678	30452	15226	14662	72831	72831	54624	36416	18208	17533
		W	3138	3138	2510	1820	1192	935	4277	4277	3421	2481	1625	1274	3921	3921	3137	2274	1490	1168
32	0.0	Q(Btu/h)	49706	49706	37279	24853	12426	11966	61226	61226	45919	30613	15306	14740	73216	73216	54912	36608	18304	17626
		W	3265	3265	2612	1894	1241	973	4413	4413	3530	2560	1677	1315	4063	4063	3250	2356	1544	1211
27	-2.8	Q(Btu/h)	49148	49148	36861	24574	12287	11832	60539	60539	45404	30270	15135	14574	72395	72395	54297	36198	18099	17429
		W	3475	3475	2780	2016	1321	1036	4698	4698	3759	2725	1785	1400	4299	4299	3439	2493	1634	1281
22	-5.6	Q(Btu/h)	48102	48102	36076	24051	12025	11580	59250	59250	44438	29625	14813	14264	70854	70854	53140	35427	17713	17057
		W	3732	3732	2986	2165	1418	1112	5009	5009	4008	2905	1904	1493	4523	4523	3618	2623	1719	1348
17	-8.3	Q(Btu/h)	45057	45057	33793	22529	11264	10847	55500	55500	41625	27750	13875	13361	66369	66369	49777	33185	16592	15978
		W	4178	4178	3342	2423	1588	1245	5425	5425	4340	3147	2062	1617	4697	4697	3758	2724	1785	1400
12	-11.1	Q(Btu/h)	43839	43839	32880	21920	10960	10554	54000	54000	40500	27000	13500	13000	64575	64575	48432	32288	16144	15546
		W	4748	4748	3798	2754	1804	1415	5856	5856	4685	3397	2225	1745	4851	4851	3881	2813	1843	1445
5	-15.0	Q(Btu/h)	43839	43839	32880	21920	10960	10554	54000	54000	40500	27000	13500	13000	64575	64575	48432	32288	16144	15546
		W	5663	5663	4530	3284	2152	1687	6474	6474	5179	3755	2460	1929	5046	5046	4037	2927	1917	1504
2	-16.7	Q(Btu/h)	43839	43839	32880	21920	10960	10554	54000	54000	40500	27000	13500	13000	64575	64575	48432	32288	16144	15546
		W	5887	5887	4710	3415	2237	1754	6319	6319	5055	3665	2401	1883	4775	4775	3820	2770	1815	1423
-3	-19.4	Q(Btu/h)	43839	43839	32880	21920	10960	10554	54000	54000	40500	27000	13500	13000	64575	64575	48432	32288	16144	15546
		W	6261	6261	5009	3631	2379	1866	6060	6060	4848	3515	2303	1806	4324	4324	3459	2508	1643	1288
-8	-22.2	Q(Btu/h)	43839	43839	32880	21920	10960	10554	54000	54000	40500	27000	13500	13000	64575	64575	48432	32288	16144	15546
		W	6653	6653	5322	3859	2528	1982	5786	5786	4628	3356	2199	1724	3843	3843	3075	2229	1460	1145
-13	-25.0	Q(Btu/h)	43839	43839	32880	21920	10960	10554	54000	54000	40500	27000	13500	13000	64575	64575	48432	32288	16144	15546
		W	6336	6336	5069	3675	2408	1888	5544	5544	4435	3215	2107	1652	3421	3421	2737	1984	1300	1019

MXZ-SM60NLHZ-U1

1) Cooling

Rated	
Q (Btu/h)	60000
W	5000

Indoor W.B.			72°F / 22.0°C						67°F / 19.4°C						64°F / 18.0°C						61°F / 16.0°C					
Out-door D.B. (°F)	Out-door D.B. (°C)		Max	Rated	75%	50%	25%	Min	Max	Rated	75%	50%	25%	Min	Max	Rated	75%	50%	25%	Min	Max	Rated	75%	50%	25%	Min
115	46.1	Q(Btu/h)	40897	40897	30673	20449	-	10906	37920	37920	28440	18960	-	10112	34955	34955	26217	17478	-	30720	30720	23040	15360	30720	-	8192
		W	2280	2280	1824	1322	-	629	2480	2480	1984	1438	-	684	2520	2520	2016	1462	-	2582	2582	2066	1498	2582	-	713
110	43.3	Q(Btu/h)	48722	48722	36541	24361	-	12992	45175	45175	33881	22587	-	12047	41643	41643	31232	20821	-	36598	36598	27448	18299	36598	-	9759
		W	3042	3042	2434	1764	-	840	3316	3316	2652	1923	-	915	3409	3409	2727	1977	-	3580	3580	2864	2077	3580	-	988
106	41.1	Q(Btu/h)	54981	54981	41236	27490	-	14662	50978	50978	38234	25489	-	13594	46993	46993	35245	23496	-	41299	41299	30975	20650	41299	-	11013
		W	3709	3709	2967	2151	-	1024	4047	4047	3237	2347	-	1117	4187	4187	3349	2428	-	3993	3993	3194	2316	3993	-	1102
102	38.9	Q(Btu/h)	60363	60363	45272	30181	-	16097	55968	55968	41976	27984	-	14925	51593	51593	38694	25796	-	45342	45342	34006	22671	45342	-	12091
		W	4313	4313	3451	2502	-	1190	4623	4623	3699	2682	-	1276	4864	4864	3891	2821	-	3821	3821	3057	2216	3821	-	1055
98	36.7	Q(Btu/h)	63983	63983	47987	31992	-	17062	59325	59325	44494	29663	-	15820	54687	54687	41015	27344	-	48061	48061	36046	24031	48061	-	12816
		W	5006	5006	4005	2904	-	1382	5113	5113	4090	2965	-	1411	4610	4610	3688	2674	-	3607	3607	2886	2092	3607	-	996
94	34.4	Q(Btu/h)	64759	64759	48569	32380	-	17269	60044	60044	45033	30022	-	16012	55350	55350	41513	27675	-	48644	48644	36483	24322	48644	-	12972
		W	5144	5144	4115	2984	-	1420	4952	4952	3961	2872	-	1367	4399	4399	3520	2552	-	3423	3423	2738	1985	3423	-	945
90	32.2	Q(Btu/h)	64951	64951	48713	32475	-	17320	60222	60222	45167	30111	-	16059	55514	55514	41636	27757	-	48788	48788	36591	24394	48788	-	13010
		W	5022	5022	4017	2913	-	1386	4759	4759	3807	2760	-	1314	4166	4166	3332	2416	-	3227	3227	2582	1872	3227	-	891
86	30.0	Q(Btu/h)	65143	65143	48857	32571	-	17371	60400	60400	45300	30200	-	16107	55678	55678	41759	27839	-	48932	48932	36699	24466	48932	-	13049
		W	4899	4899	3919	2842	-	1352	4567	4567	3653	2649	-	1260	3932	3932	3145	2280	-	3031	3031	2425	1758	3031	-	837
82	27.8	Q(Btu/h)	65334	65334	49001	32667	-	17422	60578	60578	45433	30289	-	16154	55842	55842	41881	27921	-	49076	49076	36807	24538	49076	-	13087
		W	4777	4777	3821	2770	-	1318	4374	4374	3499	2537	-	1207	3698	3698	2958	2145	-	2835	2835	2268	1644	2835	-	783
78	25.6	Q(Btu/h)	65526	65526	49145	32763	-	17474	60756	60756	45567	30378	-	16201	56006	56006	42004	28003	-	49220	49220	36915	24610	49220	-	13125
		W	4654	4654	3723	2699	-	1284	4181	4181	3345	2425	-	1154	3464	3464	2771	2009	-	2639	2639	2112	1531	2639	-	728
74	23.3	Q(Btu/h)	65718	65718	49288	32859	-	17525	60933	60933	45700	30467	-	16249	56170	56170	42127	28085	-	49364	49364	37023	24682	49364	-	13164
		W	4531	4531	3625	2628	-	1251	3989	3989	3191	2314	-	1101	3230	3230	2584	1874	-	2443	2443	1955	1417	2443	-	674
70	21.1	Q(Btu/h)	65910	65910	49432	32955	-	17576	61111	61111	45833	30556	-	16296	56334	56334	42250	28167	-	49508	49508	37131	24754	49508	-	13202
		W	4409	4409	3527	2557	-	1217	3796	3796	3037	2202	-	1048	2997	2997	2397	1738	-	2248	2248	1798	1304	2248	-	620
66	18.9	Q(Btu/h)	66005	66005	49504	33003	-	17601	61200	61200	45900	30600	-	16320	56415	56415	42312	28208	-	49580	49580	37185	24790	49580	-	13221
		W	4349	4349	3479	2522	-	1200	3700	3700	2960	2146	-	1021	2877	2877	2302	1669	-	2148	2148	1719	1246	2148	-	593
62	16.7	Q(Btu/h)	66005	66005	49504	33003	-	17601	61200	61200	45900	30600	-	16320	56415	56415	42312	28208	-	49580	49580	37185	24790	49580	-	13221
		W	4351	4351	3481	2524	-	1201	3700	3700	2960	2146	-	1021	2871	2871	2297	1665	-	2145	2145	1716	1244	2145	-	592
58	14.4	Q(Btu/h)	66005	66005	49504	33003	-	17601	61200	61200	45900	30600	-	16320	56415	56415	42312	28208	-	49580	49580	37185	24790	49580	-	13221
		W	4354	4354	3483	2525	-	1202	3700	3700	2960	2146	-	1021	2866	2866	2293	1662	-	2143	2143	1714	1243	2143	-	591
54	12.2	Q(Btu/h)	66005	66005	49504	33003	-	17601	61200	61200	45900	30600	-	16320	56415	56415	42312	28208	-	49580	49580	37185	24790	49580	-	13221
		W	4356	4356	3485	2527	-	1202	3700	3700	2960	2146	-	1021	2860	2860	2288	1659	-	2140	2140	1712	1241	2140	-	591
50	10.0	Q(Btu/h)	66005	66005	49504	33003	-	17601	61200	61200	45900	30600	-	16320	56415	56415	42312	28208	-	49580	49580	37185	24790	49580	-	13221
		W	4359	4359	3487	2528	-	1203	3700	3700	2960	2146	-	1021	2855	2855	2284	1656	-	2137	2137	1710	1239	2137	-	590
46	7.8	Q(Btu/h)	66005	66005	49504	33003	-	17601	61200	61200	45900	30600	-	16320	56415	56415	42312	28208	-	49580	49580	37185	24790	49580	-	13221
		W	4361	4361	3489	2529	-	1204	3700	3700	2960	2146	-	1021	2849	2849	2280	1653	-	2134	2134	1707	1238	2134	-	589
42	5.6	Q(Btu/h)	66005	66005	49504	33003	-	17601	61200	61200	45900	30600	-	16320	56415	56415	42312	28208	-	49580	49580	37185	24790	49580	-	13221
		W	4363	4363	3491	2531	-	1204	3700	3700	2960	2146	-	1021	2844	2844	2275	1650	-	2131	2131	1705	1236	2131	-	588
38	3.3	Q(Btu/h)	66005	66005	49504	33003	-	17601	61200	61200	45900	30600	-	16320	56415	56415	42312	28208	-	49580	49580	37185	24790	49580	-	13221
		W	4366	4366	3493	2532	-	1205	3700	3700	2960	2146	-	1021	2838	2838	2271	1646	-	2129	2129	1703	1235	2129	-	587
34	1.1	Q(Btu/h)	66005	66005	49504	33003	-	17601	61200	61200	45900	30600	-	16320	56415	56415	42312	28208	-	49580	49580	37185	24790	49580	-	13221
		W	4368	4368	3495	2534	-	1206	3700	3700	2960	2146	-	1021	2833	2833	2266	1643	-	2126	2126	1701	1233	2126	-	587
30	-1.1	Q(Btu/h)	66005	66005	49504	33003	-	17601	61200	61200	45900	30600	-	16320	56415	56415	42312	28208	-	49580	49580	37185	24790	49580	-	13221
		W	4371	4371	3497	2535	-	1206	3700	3700	2960	2146	-	1021	2827	2827	2262	1640	-	2123	2123	1698	1231	2123	-	586
26	-3.3	Q(Btu/h)	66005	66005	49504	33003	-	17601	61200	61200	45900	30600	-	16320	56415	56415	42312	28208	-	49580	49580	37185	24790	49580	-	13221
		W	4373	4373	3499	2536	-	1207	3700	3700	2960	2146	-	1021	2822	2822	2258	1637	-	2120	2120	1696	1230	2120	-	585
23	-5.0	Q(Btu/h)	66005	66005	49504	33003	-	17601	61200	61200	45900	30600	-	16320	56415	56415	42312	28208	-	49580	49580	37185	24790	49580	-	13221
		W	4375	4375	3500	2538	-	1208	3700	3700	2960	2146	-	1021	2818	2818	2254	1634	-	2118	2118	1694	1228	2118	-	585
18	-7.8	Q(Btu/h)	66005	66005	49504	33003	-	17601	61200	61200	45900	30600	-	16320	56415	56415	42312	28208	-	49580	49580	37185	24790	49580	-	13221
		W	4375	4375	3500	2538	-	1208	3700	3700	2960	2146	-	1021	2818	2818	2254	1634	-	2118	2118	1694	1228	2118	-	585
14	-10.0	Q(Btu/h)	66096	66096	49504	33003	-	17601	61200	61200	45900	30600	-	16320	56415	56415	42312	28208	-	49580	49580	37185	24790	49580	-	13221
		W	4375	4375	3500	2538	-	1208	3700	3700	2960	2146	-	1021	2818	2818	2254	1634	-	2118	2118	1694	1228	2118	-	585
10	-12.2	Q(Btu/h)	66005	66005	49504	33003	-	17601	61200	61200	45900	30600	-	16320	56415	56415	42312	28208	-	49580	49580	37185	24790	49580	-	13221
		W	4375	4375	3500	2538	-	1208	3700	3700	2960	2146	-	1021	2818	2818	2254	1634	-	2118	2118	1694	1228	2118	-	585
6	-14.4	Q(Btu/h)	66005	66005	49504	33003	-	17601	61200	61200	45900	30600	-	16320	56415	56415	42312	28208	-	49580	49580	37185	24790	49580	-	13221
		W	4375	4375	3500	2538	-	1208	3700	3700	2960	2146	-	1021	2818	2818	2254	1634	-	2118	2118	1694	1228	2118	-	585

MXZ-SM60NLHZ-U1

2) Heating

Rated	
Q (Btu/h)	62000
W	4435

Indoor D.B.			79°F / 26.0°C						70°F / 21.1°C						61°F / 16.0°C					
Out-door W.B. (°F)	Out-door W.B. (°C)		Max	Rated	75%	50%	25%	Min	Max	Rated	75%	50%	25%	Min	Max	Rated	75%	50%	25%	Min
60	15.6	Q(Btu/h)	53581	50334	40186	26791	13395	10960	66000	62000	49500	33000	16500	13500	78925	74142	59194	39463	19731	16144
		W	2394	2249	1915	1388	910	629	3231	3036	2584	1874	1228	849	3231	2915	2584	1874	1228	766
55	12.8	Q(Btu/h)	53581	50334	40186	26791	13395	10960	66000	62000	49500	33000	16500	13500	78925	74142	59194	39463	19731	16144
		W	2651	2490	2120	1537	1007	696	3598	3380	2878	2087	1367	945	3598	3266	2878	2087	1367	858
50	10.0	Q(Btu/h)	53581	50334	40186	26791	13395	10960	66000	62000	49500	33000	16500	13500	78925	74142	59194	39463	19731	16144
		W	2908	2732	2326	1686	1105	764	3965	3725	3172	2300	1507	1042	3965	3617	3172	2300	1507	950
47	8.3	Q(Btu/h)	53581	50334	40186	26791	13395	10960	66000	62000	49500	33000	16500	13500	78925	74142	59194	39463	19731	16144
		W	3090	2903	2472	1792	1174	812	4288	4030	3431	2487	1630	1127	4288	3876	3431	2487	1630	1018
42	5.6	Q(Btu/h)	54409	51112	40807	27205	13602	11129	67020	62958	50265	33510	16755	13709	80145	75288	60109	40072	20036	16393
		W	3383	3179	2707	1962	1286	889	4767	4479	3814	2765	1812	1252	4767	4279	3814	2765	1812	1124
35	1.7	Q(Btu/h)	60432	56769	45324	30216	15108	12361	74438	69927	55829	37219	18610	15226	89016	83621	66762	44508	22254	18208
		W	3740	3514	2992	2169	1421	983	5098	4790	4078	2957	1937	1339	5098	4673	4078	2957	1937	1228
32	0.0	Q(Btu/h)	60751	57069	45563	30376	15188	12426	74831	70296	56124	37416	18708	15306	89486	84063	67115	44743	22372	18304
		W	3892	3657	3114	2257	1479	1022	5260	4942	4208	3051	1999	1382	5260	4842	4208	3051	1999	1272
27	-2.8	Q(Btu/h)	60070	56429	45053	30035	15018	12287	73993	69508	55494	36996	18498	15135	88483	83121	66362	44242	22121	18099
		W	4142	3892	3314	2402	1574	1088	5600	5262	4480	3248	2128	1471	5600	5124	4480	3248	2128	1346
22	-5.6	Q(Btu/h)	59373	55775	44530	29687	14843	12145	73134	68702	54851	36567	18284	14959	87457	82156	65592	43728	21864	17889
		W	4449	4180	3559	2580	1690	1169	5971	5610	4777	3463	2269	1569	5971	5391	4777	3463	2269	1416
17	-8.3	Q(Btu/h)	58564	55015	43923	29282	14641	11979	72138	67766	54103	36069	18034	14755	86265	81037	64699	43133	21566	17645
		W	4980	4679	3984	2888	1892	1308	6466	6076	5173	3751	2457	1699	6466	5599	5173	3751	2457	1471
12	-11.1	Q(Btu/h)	57508	54023	43131	28754	14377	11763	70837	66544	53128	35419	17709	14489	84710	79576	63532	42355	21177	17327
		W	5659	5318	4527	3282	2151	1487	6980	6559	5584	4048	2652	1834	6980	5782	5584	4048	2652	1519
5	-15.0	Q(Btu/h)	55800	52418	41850	27900	13950	11414	68732	64567	51549	34366	17183	14059	82193	77211	61645	41096	20548	16812
		W	6750	6342	5400	3915	2565	1773	7716	7250	6173	4475	2932	2027	7716	6014	6173	4475	2932	1580
2	-16.7	Q(Btu/h)	54004	50731	40503	27002	13501	11046	66521	62489	49891	33261	16630	13607	79549	74727	59661	39774	19887	16271
		W	7017	6593	5614	4070	2666	1843	7531	7077	6025	4368	2862	1979	7531	5691	6025	4368	2862	1495
-3	-19.4	Q(Btu/h)	50127	47089	37595	25063	12532	10253	61745	58003	46309	30872	15436	12630	73837	69362	55378	36918	18459	15103
		W	7463	7012	5970	4328	2836	1961	7224	6787	5779	4190	2745	1898	7224	5153	5779	4190	2745	1354
-8	-22.2	Q(Btu/h)	46218	43417	34663	23109	11554	9454	56930	53480	42697	28465	14232	11645	68079	63953	51059	34039	17020	13925
		W	7930	7451	6344	4599	3013	2083	6896	6480	5517	4000	2620	1812	6896	4581	5517	4000	2620	1203
-13	-25.0	Q(Btu/h)	42301	39737	31726	21151	10575	8653	52105	48947	39079	26053	13026	10658	62310	58533	46732	31155	15577	12745
		W	7552	7096	6042	4380	2870	1984	6608	6209	5286	3833	2511	1736	6608	4077	5286	3833	2511	1071

MXZ-SM72TL-U1

1) Cooling

Rated	
Q (Btu/h)	72000
W	6320

Indoor W.B.			72°F / 22.0°C						67°F / 19.4°C						64°F / 18.0°C						61°F / 16.0°C					
Out-door D.B. (°F)	Out-door D.B. (°C)		Max	Rated	75%	50%	25%	Min	Max	Rated	75%	50%	25%	Min	Max	Rated	75%	50%	25%	Min	Max	Rated	75%	50%	25%	Min
115	46.1	Q(Btu/h)	49077	49077	36808	24538	12269	10906	45504	45504	34128	22752	11376	10112	41947	41947	31460	20973	10487	9321	36865	36865	27648	18432	9216	8192
		W	2882	2882	2306	1672	1095	629	3135	3135	2508	1818	1191	684	3185	3185	2548	1847	1210	696	3264	3264	2611	1893	1240	713
110	43.3	Q(Btu/h)	58466	58466	43849	29233	14616	12992	54209	54209	40657	27105	13552	12047	49971	49971	37479	24986	12493	11105	43917	43917	32938	21959	10979	9759
		W	3845	3845	3076	2230	1461	840	4191	4191	3353	2431	1593	915	4309	4309	3447	2499	1637	941	4525	4525	3620	2625	1720	988
106	41.1	Q(Btu/h)	65977	65977	49483	32989	16494	14662	61174	61174	45880	30587	15293	13594	56391	56391	42294	28196	14098	12531	49559	49559	37169	24780	12390	11013
		W	4688	4688	3751	2719	1782	1024	5115	5115	4092	2967	1944	1117	5292	5292	4234	3069	2011	1156	5047	5047	4037	2927	1918	1102
102	38.9	Q(Btu/h)	72435	72435	54326	36218	18109	16097	67162	67162	50371	33581	16790	14925	61911	61911	46433	30956	15478	13758	54410	54410	40808	27205	13603	12091
		W	5452	5452	4362	3162	2072	1190	5844	5844	4675	3389	2221	1276	6148	6148	4919	3566	2336	1343	4830	4830	3864	2802	1835	1055
98	36.7	Q(Btu/h)	76780	76780	57585	38390	-	17062	71190	71190	53393	35595	-	15820	65624	65624	49218	32812	-	14583	57674	57674	43255	28837	-	12816
		W	6328	6328	5062	3670	-	1382	6462	6462	5170	3748	-	1411	5827	5827	4662	3380	-	1272	4560	4560	3648	2645	-	996
94	34.4	Q(Btu/h)	77711	77711	58283	38855	-	17269	72053	72053	54040	36027	-	16012	66420	66420	49815	33210	-	14760	58373	58373	43780	29187	-	12972
		W	6502	6502	5202	3771	-	1420	6259	6259	5007	3630	-	1367	5561	5561	4449	3225	-	1214	4327	4327	3461	2510	-	945
90	32.2	Q(Btu/h)	77941	77941	58456	38971	19485	17320	72267	72267	54200	36133	18067	16059	66617	66617	49963	33308	16654	14804	58546	58546	43909	29273	14636	13010
		W	6348	6348	5078	3682	2412	1386	6016	6016	4813	3489	2286	1314	5265	5265	4212	3054	2001	1150	4079	4079	3263	2366	1550	891
86	30.0	Q(Btu/h)	78171	78171	58628	39086	19543	17371	72480	72480	54360	36240	18120	16107	66814	66814	50110	33407	16703	14847	58719	58719	44039	29359	14680	13049
		W	6193	6193	4954	3592	2353	1352	5772	5772	4618	3348	2193	1260	4970	4970	3976	2882	1889	1085	3831	3831	3065	2222	1456	837
82	27.8	Q(Btu/h)	78401	78401	58801	39201	19600	17422	72693	72693	54520	36347	18173	16154	67010	67010	50258	33505	16753	14891	58892	58892	44169	29446	14723	13087
		W	6038	6038	4830	3502	2294	1318	5529	5529	4423	3207	2101	1207	4674	4674	3739	2711	1776	1021	3584	3584	2867	2079	1362	783
78	25.6	Q(Btu/h)	78631	78631	58973	39316	19658	17474	72907	72907	54680	36453	18227	16201	67207	67207	50405	33603	16802	14935	59064	59064	44298	29532	14766	13125
		W	5883	5883	4706	3412	2235	1284	5285	5285	4228	3066	2008	1154	4379	4379	3503	2540	1664	956	3336	3336	2669	1935	1268	728
74	23.3	Q(Btu/h)	78861	78861	59146	39431	19715	17525	73120	73120	54840	36560	18280	16249	67404	67404	50553	33702	16851	14979	59237	59237	44428	29619	14809	13164
		W	5728	5728	4582	3322	2177	1251	5042	5042	4034	2924	1916	1101	4083	4083	3267	2368	1552	892	3089	3089	2471	1791	1174	674
70	21.1	Q(Btu/h)	79091	79091	59319	39546	19773	17576	73333	73333	55000	36667	18333	16296	67600	67600	50700	33800	16900	15022	59410	59410	44558	29705	14853	13202
		W	5573	5573	4458	3232	2118	1217	4799	4799	3839	2783	1823	1048	3788	3788	3030	2197	1439	827	2841	2841	2273	1648	1080	620
66	18.9	Q(Btu/h)	79207	79207	59405	39603	19802	17601	73440	73440	55080	36720	18360	16320	67699	67699	50774	33849	16925	15044	59497	59497	44622	29748	14874	13221
		W	5497	5497	4397	3188	2089	1200	4677	4677	3741	2713	1777	1021	3636	3636	2909	2109	1382	794	2715	2715	2172	1575	1032	593
62	16.7	Q(Btu/h)	79207	79207	59405	39603	19802	17601	73440	73440	55080	36720	18360	16320	67699	67699	50774	33849	16925	15044	59497	59497	44622	29748	14874	13221
		W	5500	5500	4400	3190	2090	1201	4677	4677	3741	2713	1777	1021	3630	3630	2904	2105	1379	793	2712	2712	2169	1573	1030	592
58	14.4	Q(Btu/h)	79207	79207	59405	39603	19802	17601	73440	73440	55080	36720	18360	16320	67699	67699	50774	33849	16925	15044	59497	59497	44622	29748	14874	13221
		W	5503	5503	4402	3192	2091	1202	4677	4677	3741	2713	1777	1021	3623	3623	2898	2101	1377	791	2708	2708	2167	1571	1029	591
54	12.2	Q(Btu/h)	79207	79207	59405	39603	19802	17601	73440	73440	55080	36720	18360	16320	67699	67699	50774	33849	16925	15044	59497	59497	44622	29748	14874	13221
		W	5506	5506	4405	3194	2092	1202	4677	4677	3741	2713	1777	1021	3616	3616	2893	2097	1374	789	2705	2705	2164	1569	1028	591
50	10.0	Q(Btu/h)	79207	79207	59405	39603	19802	17601	73440	73440	55080	36720	18360	16320	67699	67699	50774	33849	16925	15044	59497	59497	44622	29748	14874	13221
		W	5509	5509	4407	3195	2093	1203	4677	4677	3741	2713	1777	1021	3609	3609	2887	2093	1371	788	2701	2701	2161	1567	1026	590
46	7.8	Q(Btu/h)	79207	79207	59405	39603	19802	17601	73440	73440	55080	36720	18360	16320	67699	67699	50774	33849	16925	15044	59497	59497	44622	29748	14874	13221
		W	5512	5512	4410	3197	2095	1204	4677	4677	3741	2713	1777	1021	3602	3602	2881	2089	1369	786	2698	2698	2158	1565	1025	589
42	5.6	Q(Btu/h)	79207	79207	59405	39603	19802	17601	73440	73440	55080	36720	18360	16320	67699	67699	50774	33849	16925	15044	59497	59497	44622	29748	14874	13221
		W	5515	5515	4412	3199	2096	1204	4677	4677	3741	2713	1777	1021	3595	3595	2876	2085	1366	785	2694	2694	2155	1563	1024	588
38	3.3	Q(Btu/h)	79207	79207	59405	39603	19802	17601	73440	73440	55080	36720	18360	16320	67699	67699	50774	33849	16925	15044	59497	59497	44622	29748	14874	13221
		W	5518	5518	4415	3201	2097	1205	4677	4677	3741	2713	1777	1021	3588	3588	2870	2081	1363	783	2690	2690	2152	1560	1022	587
34	1.1	Q(Btu/h)	79207	79207	59405	39603	19802	17601	73440	73440	55080	36720	18360	16320	67699	67699	50774	33849	16925	15044	59497	59497	44622	29748	14874	13221
		W	5522	5522	4417	3202	2098	1206	4677	4677	3741	2713	1777	1021	3581	3581	2865	2077	1361	782	2687	2687	2150	1558	1021	587
30	-1.1	Q(Btu/h)	79207	79207	59405	39603	19802	17601	73440	73440	55080	36720	18360	16320	67699	67699	50774	33849	16925	15044	59497	59497	44622	29748	14874	13221
		W	5525	5525	4420	3204	2099	1206	4677	4677	3741	2713	1777	1021	3574	3574	2859	2073	1358	780	2683	2683	2147	1556	1020	586
26	-3.3	Q(Btu/h)	79207	79207	59405	39603	19802	17601	73440	73440	55080	36720	18360	16320	67699	67699	50774	33849	16925	15044	59497	59497	44622	29748	14874	13221
		W	5528	5528	4422	3206	2101	1207	4677	4677	3741	2713	1777	1021	3567	3567	2854	2069	1355	779	2680	2680	2144	1554	1018	585
23	-5.0	Q(Btu/h)	79207	79207	59405	39603	19802	17601	73440	73440	55080	36720	18360	16320	67699	67699	50774	33849	16925	15044	59497	59497	44622	29748	14874	13221
		W	5530	5530	4424	3207	2101	1208	4677	4677	3741	2713	1777	1021	3562	3562	2849	2066	1353	778	2677	2677	2142	1553	1017	585
18	-7.8	Q(Btu/h)	79207	79207	59405	39603	19802	17601	73440	73440	55080	36720	18360	16320	67699	67699	50774	33849	16925	15044	59497	59497	44622	29748	14874	13221
		W	5530	5530	4424	3207	2101	1208	4677	4677	3741	2713	1777	1021	3562	3562	2849	2066	1353	778	2677	2677	2142	1553	1017	585
14	-10.0	Q(Btu/h)	79315	79315	59405	39603	19802	17601	73440	73440	55080	36720	18360	16320	67699	67699	50774	33849	16925	15044	59497	59497	44622	29748	14874	13221
		W	5530	5530	4424	3207	2101	1208	4677	4677	3741	2713	1777	1021	3562	3562	2849	2066	1353	778	2677	2677	2142	1553	1017	585
10	-12.2	Q(Btu/h)	79207	79207	59405	39603	19802	17601	73440	73440	55080	36720	18360	16320	67699	67699	50774	33849	16925	15044	59497	59497	44622	29748	14874	13221
		W	5530	5530	4424	3207	2101	1208	4677	4677	3741	2713	1777	1021	3562	3562	2849	2066	1353	778	2677	2677	2142	1553	1017	585
6	-14.4	Q(Btu/h)	79207	79207	59405	39603	19802	17601	73440	73440	55080	36720	18360	16320	67699	67699	50774	33849	16925	15044	59497	59497	44622	29748	14874	13221
		W	5530	5530	4424	3207	2101	1208	4677	4677	3741	2713	1777	1021	3562	3562	2849	2066	1353	778	2677	2677	2142	1553	1017	585

MXZ-SM72TL-U1

2) Heating

Rated	
Q (Btu/h)	80000
W	5690

Indoor D.B.			79°F / 26.0°C						70°F / 21.1°C						61°F / 16.0°C					
Out-door W.B. (°F)	Out-door W.B. (°C)		Max	Rated	75%	50%	25%	Min	Max	Rated	75%	50%	25%	Min	Max	Rated	75%	50%	25%	Min
60	15.6	Q(Btu/h)	64947	64947	48710	32474	16237	10960	80000	80000	60000	40000	20000	13500	95667	95667	71750	47834	23917	16144
		W	2885	2885	2308	1674	1096	629	3894	3894	3116	2259	1480	849	3349	3349	2679	1942	1273	730
55	12.8	Q(Btu/h)	64947	64947	48710	32474	16237	10960	80000	80000	60000	40000	20000	13500	95667	95667	71750	47834	23917	16144
		W	3195	3195	2556	1853	1214	696	4337	4337	3470	2515	1648	945	3679	3679	2943	2134	1398	802
50	10.0	Q(Btu/h)	64947	64947	48710	32474	16237	10960	80000	80000	60000	40000	20000	13500	95667	95667	71750	47834	23917	16144
		W	3505	3505	2804	2033	1332	764	4780	4780	3824	2772	1816	1042	4009	4009	3207	2325	1523	874
47	8.3	Q(Btu/h)	64947	64947	48710	32474	16237	10960	80000	80000	60000	40000	20000	13500	95667	95667	71750	47834	23917	16144
		W	3725	3725	2980	2160	1415	812	5170	5170	4136	2998	1965	1127	4295	4295	3436	2491	1632	936
42	5.6	Q(Btu/h)	64947	64947	48710	32474	16237	10960	80000	80000	60000	40000	20000	13500	95667	95667	71750	47834	23917	16144
		W	4145	4145	3316	2404	1575	903	5847	5847	4678	3391	2222	1274	4845	4845	3876	2810	1841	1056
35	1.7	Q(Btu/h)	64947	64947	48710	32474	16237	10960	80000	80000	60000	40000	20000	13500	95667	95667	71750	47834	23917	16144
		W	5041	5041	4033	2924	1916	1099	6946	6946	5557	4029	2640	1514	6025	6025	4820	3494	2289	1313
32	0.0	Q(Btu/h)	64877	64877	48657	32438	16219	10948	79913	79913	59935	39956	19978	13485	95563	95563	71672	47782	23891	16126
		W	5420	5420	4336	3143	2060	1181	7159	7159	5727	4152	2721	1560	6262	6262	5009	3632	2379	1365
27	-2.8	Q(Btu/h)	64523	64523	48392	32262	16131	10888	79478	79478	59608	39739	19869	13412	95043	95043	71282	47521	23761	16038
		W	6035	6035	4828	3500	2293	1315	6654	6654	5323	3859	2528	1450	5763	5763	4610	3342	2190	1256
22	-5.6	Q(Btu/h)	64170	64170	48128	32085	16043	10829	79043	79043	59282	39521	19761	13338	94522	94522	70892	47261	23631	15951
		W	6650	6650	5320	3857	2527	1449	6148	6148	4919	3566	2336	1340	5264	5264	4211	3053	2000	1147
17	-8.3	Q(Btu/h)	63800	63800	47850	31900	15950	10766	78587	78587	58941	39294	19647	13262	93978	93978	70484	46989	23495	15859
		W	6558	6558	5247	3804	2492	1429	5577	5577	4462	3235	2119	1215	4689	4689	3751	2719	1782	1022
12	-11.1	Q(Btu/h)	58689	58689	44016	29344	14672	9904	72291	72291	54218	36145	18073	12199	86448	86448	64836	43224	21612	14588
		W	6174	6174	4939	3581	2346	1345	5195	5195	4156	3013	1974	1132	4319	4319	3455	2505	1641	941
5	-15.0	Q(Btu/h)	47116	47116	35337	23558	11779	7951	58036	58036	43527	29018	14509	9794	69402	69402	52052	34701	17351	11712
		W	5802	5802	4642	3365	2205	1265	4876	4876	3901	2828	1853	1063	4040	4040	3232	2343	1535	880
2	-16.7	Q(Btu/h)	42680	42680	32010	21340	10670	7202	52571	52571	39429	26286	13143	8871	62867	62867	47150	31434	15717	10609
		W	5549	5549	4439	3218	2108	1209	4725	4725	3780	2740	1795	1030	3978	3978	3183	2307	1512	867
-3	-19.4	Q(Btu/h)	35721	35721	26791	17860	8930	6028	44000	44000	33000	22000	11000	7425	52617	52617	39463	26308	13154	8879
		W	5125	5125	4100	2973	1948	1117	4472	4472	3577	2594	1699	975	3876	3876	3101	2248	1473	845
-8	-22.2	Q(Btu/h)	32267	32267	24201	16134	8067	5445	39746	39746	29810	19873	9937	6707	47530	47530	35647	23765	11882	8021
		W	4701	4701	3761	2726	1786	1024	4209	4209	3367	2441	1599	917	3669	3669	2935	2128	1394	800
-13	-25.0	Q(Btu/h)	29690	29690	22268	14845	7423	5010	36571	36571	27429	18286	9143	6171	43734	43734	32800	21867	10933	7380
		W	4276	4276	3421	2480	1625	932	3943	3943	3155	2287	1498	859	3437	3437	2749	1993	1306	749

MXZ-SM96TL-U1

1) Cooling

Rated	
Q (Btu/h)	96000
W	8890

Indoor W.B.			72°F / 22.0°C						67°F / 19.4°C						64°F / 18.0°C						61°F / 16.0°C					
Out-door D.B. (°F)	Out-door D.B. (°C)		Max	Rated	75%	50%	25%	Min	Max	Rated	75%	50%	25%	Min	Max	Rated	75%	50%	25%	Min	Max	Rated	75%	50%	25%	Min
115	46.1	Q(Btu/h)	65436	65436	49077	32718	16359	10906	60672	60672	45504	30336	15168	10112	55929	55929	41947	27964	13982	9321	49153	49153	36865	24576	12288	8192
		W	4054	4054	3243	2351	1540	629	4409	4409	3528	2557	1676	684	4481	4481	3584	2599	1703	696	4591	4591	3673	2663	1745	713
110	43.3	Q(Btu/h)	77955	77955	58466	38977	19489	12992	72279	72279	54209	36140	18070	12047	66629	66629	49971	33314	16657	11105	58556	58556	43917	29278	14639	9759
		W	5409	5409	4327	3137	2055	840	5895	5895	4716	3419	2240	915	6061	6061	4849	3515	2303	941	6366	6366	5093	3692	2419	988
106	41.1	Q(Btu/h)	87970	87970	65977	43985	21992	14662	81565	81565	61174	40783	20391	13594	75188	75188	56391	37594	18797	12531	66079	66079	49559	33040	16520	11013
		W	6595	6595	5276	3825	2506	1024	7195	7195	5756	4173	2734	1117	7444	7444	5955	4317	2829	1156	7099	7099	5679	4117	2698	1102
102	38.9	Q(Btu/h)	96580	96580	72435	48290	24145	16097	89549	89549	67162	44774	22387	14925	82548	82548	61911	41274	20637	13758	72547	72547	54410	36273	18137	12091
		W	7669	7669	6135	4448	2914	1190	8220	8220	6576	4768	3124	1276	8649	8649	6919	5016	3287	1343	6794	6794	5436	3941	2582	1055
98	36.7	Q(Btu/h)	102373	102373	76780	51187	-	17062	94920	94920	71190	47460	-	15820	87499	87499	65624	43750	-	14583	76898	76898	57674	38449	-	12816
		W	8901	8901	7121	5163	-	1382	9090	9090	7272	5272	-	1411	8197	8197	6558	4754	-	1272	6414	6414	5131	3720	-	996
94	34.4	Q(Btu/h)	103615	103615	77711	51807	-	17269	96071	96071	72053	48036	-	16012	88560	88560	66420	44280	-	14760	77831	77831	58373	38915	-	12972
		W	9147	9147	7317	5305	-	1420	8804	8804	7044	5107	-	1367	7822	7822	6258	4537	-	1214	6086	6086	4869	3530	-	945
90	32.2	Q(Btu/h)	103921	103921	77941	51961	25980	17320	96356	96356	72267	48178	24089	16059	88823	88823	66617	44411	22206	14804	78061	78061	58546	39031	19515	13010
		W	8929	8929	7143	5179	3393	1386	8462	8462	6770	4908	3216	1314	7406	7406	5925	4296	2814	1150	5738	5738	4590	3328	2180	891
86	30.0	Q(Btu/h)	104228	104228	78171	52114	26057	17371	96640	96640	72480	48320	24160	16107	89085	89085	66814	44542	22271	14847	78292	78292	58719	39146	19573	13049
		W	8711	8711	6969	5052	3310	1352	8120	8120	6496	4709	3085	1260	6991	6991	5593	4055	2656	1085	5390	5390	4312	3126	2048	837
82	27.8	Q(Btu/h)	104535	104535	78401	52267	26134	17422	96924	96924	72693	48462	24231	16154	89347	89347	67010	44674	22337	14891	78522	78522	58892	39261	19631	13087
		W	8493	8493	6794	4926	3227	1318	7777	7777	6222	4511	2955	1207	6575	6575	5260	3814	2499	1021	5041	5041	4033	2924	1916	783
78	25.6	Q(Btu/h)	104842	104842	78631	52421	26210	17474	97209	97209	72907	48604	24302	16201	89609	89609	67207	44805	22402	14935	78753	78753	59064	39376	19688	13125
		W	8275	8275	6620	4799	3144	1284	7435	7435	5948	4312	2825	1154	6159	6159	4927	3572	2341	956	4693	4693	3754	2722	1783	728
74	23.3	Q(Btu/h)	105149	105149	78861	52574	26287	17525	97493	97493	73120	48747	24373	16249	89871	89871	67404	44936	22468	14979	78983	78983	59237	39492	19746	13164
		W	8057	8057	6445	4673	3062	1251	7092	7092	5674	4114	2695	1101	5744	5744	4595	3331	2183	892	4345	4345	3476	2520	1651	674
70	21.1	Q(Btu/h)	105455	105455	79091	52728	26364	17576	97778	97778	73333	48889	24444	16296	90134	90134	67600	45067	22533	15022	79214	79214	59410	39607	19803	13202
		W	7839	7839	6271	4547	2979	1217	6750	6750	5400	3915	2565	1048	5328	5328	4262	3090	2025	827	3996	3996	3197	2318	1519	620
66	18.9	Q(Btu/h)	105609	105609	79207	52804	26402	17601	97920	97920	73440	48960	24480	16320	90265	90265	67699	45132	22566	15044	79329	79329	59497	39664	19832	13221
		W	7732	7732	6186	4485	2938	1200	6579	6579	5263	3816	2500	1021	5115	5115	4092	2967	1944	794	3820	3820	3056	2215	1451	593
62	16.7	Q(Btu/h)	105609	105609	79207	52804	26402	17601	97920	97920	73440	48960	24480	16320	90265	90265	67699	45132	22566	15044	79329	79329	59497	39664	19832	13221
		W	7736	7736	6189	4487	2940	1201	6579	6579	5263	3816	2500	1021	5105	5105	4084	2961	1940	793	3815	3815	3052	2212	1450	592
58	14.4	Q(Btu/h)	105609	105609	79207	52804	26402	17601	97920	97920	73440	48960	24480	16320	90265	90265	67699	45132	22566	15044	79329	79329	59497	39664	19832	13221
		W	7741	7741	6193	4490	2941	1202	6579	6579	5263	3816	2500	1021	5096	5096	4077	2955	1936	791	3810	3810	3048	2210	1448	591
54	12.2	Q(Btu/h)	105609	105609	79207	52804	26402	17601	97920	97920	73440	48960	24480	16320	90265	90265	67699	45132	22566	15044	79329	79329	59497	39664	19832	13221
		W	7745	7745	6196	4492	2943	1202	6579	6579	5263	3816	2500	1021	5086	5086	4069	2950	1933	789	3805	3805	3044	2207	1446	591
50	10.0	Q(Btu/h)	105609	105609	79207	52804	26402	17601	97920	97920	73440	48960	24480	16320	90265	90265	67699	45132	22566	15044	79329	79329	59497	39664	19832	13221
		W	7749	7749	6200	4495	2945	1203	6579	6579	5263	3816	2500	1021	5076	5076	4061	2944	1929	788	3800	3800	3040	2204	1444	590
46	7.8	Q(Btu/h)	105609	105609	79207	52804	26402	17601	97920	97920	73440	48960	24480	16320	90265	90265	67699	45132	22566	15044	79329	79329	59497	39664	19832	13221
		W	7754	7754	6203	4497	2946	1204	6579	6579	5263	3816	2500	1021	5066	5066	4053	2938	1925	786	3795	3795	3036	2201	1442	589
42	5.6	Q(Btu/h)	105609	105609	79207	52804	26402	17601	97920	97920	73440	48960	24480	16320	90265	90265	67699	45132	22566	15044	79329	79329	59497	39664	19832	13221
		W	7758	7758	6206	4500	2948	1204	6579	6579	5263	3816	2500	1021	5057	5057	4045	2933	1922	785	3790	3790	3032	2198	1440	588
38	3.3	Q(Btu/h)	105609	105609	79207	52804	26402	17601	97920	97920	73440	48960	24480	16320	90265	90265	67699	45132	22566	15044	79329	79329	59497	39664	19832	13221
		W	7762	7762	6210	4502	2950	1205	6579	6579	5263	3816	2500	1021	5047	5047	4037	2927	1918	783	3785	3785	3028	2195	1438	587
34	1.1	Q(Btu/h)	105609	105609	79207	52804	26402	17601	97920	97920	73440	48960	24480	16320	90265	90265	67699	45132	22566	15044	79329	79329	59497	39664	19832	13221
		W	7767	7767	6213	4505	2951	1206	6579	6579	5263	3816	2500	1021	5037	5037	4030	2921	1914	782	3780	3780	3024	2192	1436	587
30	-1.1	Q(Btu/h)	105609	105609	79207	52804	26402	17601	97920	97920	73440	48960	24480	16320	90265	90265	67699	45132	22566	15044	79329	79329	59497	39664	19832	13221
		W	7771	7771	6217	4507	2953	1206	6579	6579	5263	3816	2500	1021	5027	5027	4022	2916	1910	780	3775	3775	3020	2189	1434	586
26	-3.3	Q(Btu/h)	105609	105609	79207	52804	26402	17601	97920	97920	73440	48960	24480	16320	90265	90265	67699	45132	22566	15044	79329	79329	59497	39664	19832	13221
		W	7775	7775	6220	4510	2955	1207	6579	6579	5263	3816	2500	1021	5017	5017	4014	2910	1907	779	3769	3769	3016	2186	1432	585
23	-5.0	Q(Btu/h)	105609	105609	79207	52804	26402	17601	97920	97920	73440	48960	24480	16320	90265	90265	67699	45132	22566	15044	79329	79329	59497	39664	19832	13221
		W	7779	7779	6223	4512	2956	1208	6579	6579	5263	3816	2500	1021	5010	5010	4008	2906	1904	778	3766	3766	3013	2184	1431	585
18	-7.8	Q(Btu/h)	105609	105609	79207	52804	26402	17601	97920	97920	73440	48960	24480	16320	90265	90265	67699	45132	22566	15044	79329	79329	59497	39664	19832	13221
		W	7779	7779	6223	4512	2956	1208	6579	6579	5263	3816	2500	1021	5010	5010	4008	2906	1904	778	3766	3766	3013	2184	1431	585
14	-10.0	Q(Btu/h)	105754	105754	79207	52804	26402	17601	97920	97920	73440	48960	24480	16320	90265	90265	67699	45132	22566	15044	79329	79329	59497	39664	19832	13221
		W	7779	7779	6223	4512	2956	1208	6579	6579	5263	3816	2500	1021	5010	5010	4008	2906	1904	778	3766	3766	3013	2184	1431	585
10	-12.2	Q(Btu/h)	105609	105609	79207	52804	26402	17601	97920	97920	73440	48960	24480	16320	90265	90265	67699	45132	22566	15044	79329	79329	59497	39664	19832	13221
		W	7779	7779	6223	4512	2956	1208	6579	6579	5263	3816	2500	1021	5010	5010	4008	2906	1904	778	3766	3766	3013	2184	1431	585
6	-14.4	Q(Btu/h)	105609	105609	79207	52804	26402	17601	97920	97920	73440	48960	24480	16320	90265	90265	67699	45132	22566	15044	79329	79329	59497	39664	19832	13221
		W	7779	7779	6223	4512	2956	1208	6579	6579	5263	3816	2500	1021	5010	5010	4008	2906	1904	778	3766	3766	3013	2184	1431	585

MXZ-SM96TL-U1

2) Heating

Rated	
Q (Btu/h)	108000
W	8280

Indoor D.B.			79°F / 26.0°C						70°F / 21.1°C						61°F / 16.0°C					
Out-door W.B. (°F)	Out-door W.B. (°C)		Max	Rated	75%	50%	25%	Min	Max	Rated	75%	50%	25%	Min	Max	Rated	75%	50%	25%	Min
60	15.6	Q(Btu/h)	87679	87679	65759	43839	21920	10960	108000	108000	81000	54000	27000	13500	129151	129151	96863	64575	32288	16144
		W	4199	4199	3359	2435	1596	629	5667	5667	4534	3287	2154	849	4873	4873	3898	2826	1852	730
55	12.8	Q(Btu/h)	87679	87679	65759	43839	21920	10960	108000	108000	81000	54000	27000	13500	129151	129151	96863	64575	32288	16144
		W	4650	4650	3720	2697	1767	696	6311	6311	5049	3660	2398	945	5353	5353	4283	3105	2034	802
50	10.0	Q(Btu/h)	87679	87679	65759	43839	21920	10960	108000	108000	81000	54000	27000	13500	129151	129151	96863	64575	32288	16144
		W	5100	5100	4080	2958	1938	764	6955	6955	5564	4034	2643	1042	5834	5834	4667	3384	2217	874
47	8.3	Q(Btu/h)	87679	87679	65759	43839	21920	10960	108000	108000	81000	54000	27000	13500	129151	129151	96863	64575	32288	16144
		W	5420	5420	4336	3144	2060	812	7523	7523	6018	4363	2859	1127	6250	6250	5000	3625	2375	936
42	5.6	Q(Btu/h)	87679	87679	65759	43839	21920	10960	108000	108000	81000	54000	27000	13500	129151	129151	96863	64575	32288	16144
		W	6032	6032	4826	3498	2292	903	8509	8509	6807	4935	3233	1274	7051	7051	5641	4089	2679	1056
35	1.7	Q(Btu/h)	87679	87679	65759	43839	21920	10960	108000	108000	81000	54000	27000	13500	129151	129151	96863	64575	32288	16144
		W	7335	7335	5868	4254	2787	1099	10108	10108	8087	5863	3841	1514	8767	8767	7013	5085	3331	1313
32	0.0	Q(Btu/h)	87583	87583	65688	43792	21896	10948	107883	107883	80912	53941	26971	13485	129010	129010	96758	64505	32253	16126
		W	7887	7887	6309	4574	2997	1181	10418	10418	8335	6043	3959	1560	9112	9112	7289	5285	3462	1365
27	-2.8	Q(Btu/h)	87106	87106	65330	43553	21777	10888	107295	107295	80471	53648	26824	13412	128308	128308	96231	64154	32077	16038
		W	8782	8782	7026	5094	3337	1315	9683	9683	7746	5616	3679	1450	8386	8386	6709	4864	3187	1256
22	-5.6	Q(Btu/h)	86630	86630	64972	43315	21657	10829	106708	106708	80031	53354	26677	13338	127605	127605	95704	63803	31901	15951
		W	9677	9677	7742	5613	3677	1449	8947	8947	7157	5189	3400	1340	7660	7660	6128	4443	2911	1147
17	-8.3	Q(Btu/h)	86131	86131	64598	43065	21533	10766	106093	106093	79570	53047	26523	13262	126870	126870	95153	63435	31718	15859
		W	9544	9544	7635	5535	3627	1429	8116	8116	6493	4707	3084	1215	6823	6823	5458	3957	2593	1022
12	-11.1	Q(Btu/h)	79230	79230	59422	39615	19807	9904	97593	97593	73195	48796	24398	12199	116705	116705	87529	58353	29176	14588
		W	8984	8984	7187	5211	3414	1345	7560	7560	6048	4385	2873	1132	6285	6285	5028	3645	2388	941
5	-15.0	Q(Btu/h)	63607	63607	47705	31803	15902	7951	78349	78349	58762	39175	19587	9794	93693	93693	70270	46846	23423	11712
		W	8444	8444	6755	4897	3209	1265	7096	7096	5677	4116	2696	1063	5879	5879	4703	3410	2234	880
2	-16.7	Q(Btu/h)	57617	57617	43213	28809	14404	7202	70971	70971	53229	35486	17743	8871	84870	84870	63653	42435	21218	10609
		W	8074	8074	6459	4683	3068	1209	6875	6875	5500	3988	2613	1030	5789	5789	4631	3358	2200	867
-3	-19.4	Q(Btu/h)	48223	48223	36167	24112	12056	6028	59400	59400	44550	29700	14850	7425	71033	71033	53275	35516	17758	8879
		W	7458	7458	5967	4326	2834	1117	6507	6507	5206	3774	2473	975	5640	5640	4512	3271	2143	845
-8	-22.2	Q(Btu/h)	43561	43561	32671	21781	10890	5445	53657	53657	40243	26829	13414	6707	64165	64165	48124	32083	16041	8021
		W	6840	6840	5472	3967	2599	1024	6124	6124	4900	3552	2327	917	5340	5340	4272	3097	2029	800
-13	-25.0	Q(Btu/h)	40082	40082	30061	20041	10020	5010	49371	49371	37029	24686	12343	6171	59040	59040	44280	29520	14760	7380
		W	6222	6222	4977	3609	2364	932	5738	5738	4590	3328	2180	859	5001	5001	4001	2901	1900	749

MXZ-SM120TL-U1

1) Cooling

Rated	
Q (Btu/h)	120000
W	10700

Indoor W.B.			72°F / 22.0°C						67°F / 19.4°C						64°F / 18.0°C						61°F / 16.0°C					
Out-door D.B. (°F)	Out-door D.B. (°C)		Max	Rated	75%	50%	25%	Min	Max	Rated	75%	50%	25%	Min	Max	Rated	75%	50%	25%	Min	Max	Rated	75%	50%	25%	Min
115	46.1	Q(Btu/h)	81795	81795	61346	40897	20449	10906	75840	75840	56880	37920	18960	10112	69911	69911	52433	34955	17478	9321	61441	61441	46081	30720	15360	8192
		W	4879	4879	3903	2830	1854	629	5307	5307	4246	3078	2017	684	5393	5393	4314	3128	2049	696	5526	5526	4421	3205	2100	713
110	43.3	Q(Btu/h)	97443	97443	73082	48722	24361	12992	90349	90349	67762	45175	22587	12047	83286	83286	62464	41643	20821	11105	73195	73195	54896	36598	18299	9759
		W	6510	6510	5208	3776	2474	840	7095	7095	5676	4115	2696	915	7295	7295	5836	4231	2772	941	7662	7662	6129	4444	2911	988
106	41.1	Q(Btu/h)	109962	109962	82471	54981	27490	14662	101956	101956	76467	50978	25489	13594	93986	93986	70489	46993	23496	12531	82599	82599	61949	41299	20650	11013
		W	7938	7938	6350	4604	3016	1024	8660	8660	6928	5023	3291	1117	8959	8959	7168	5196	3405	1156	8544	8544	6835	4956	3247	1102
102	38.9	Q(Btu/h)	120725	120725	90544	60363	30181	16097	111936	111936	83952	55968	27984	14925	103185	103185	77389	51593	25796	13758	90684	90684	68013	45342	22671	12091
		W	9231	9231	7384	5354	3508	1190	9894	9894	7915	5738	3760	1276	10410	10410	8328	6038	3956	1343	8178	8178	6542	4743	3108	1055
98	36.7	Q(Btu/h)	127966	127966	95975	63983	-	17062	118650	118650	88988	59325	-	15820	109374	109374	82031	54687	-	14583	96123	96123	72092	48061	-	12816
		W	10713	10713	8571	6214	-	1382	10941	10941	8753	6346	-	1411	9866	9866	7893	5722	-	1272	7720	7720	6176	4478	-	996
94	34.4	Q(Btu/h)	129518	129518	97139	64759	-	17269	120089	120089	90067	60044	-	16012	110701	110701	83025	55350	-	14760	97289	97289	72966	48644	-	12972
		W	11009	11009	8807	6385	-	1420	10597	10597	8478	6146	-	1367	9415	9415	7532	5461	-	1214	7325	7325	5860	4249	-	945
90	32.2	Q(Btu/h)	129902	129902	97426	64951	32475	17320	120444	120444	90333	60222	30111	16059	111028	111028	83271	55514	27757	14804	97577	97577	73182	48788	24394	13010
		W	10747	10747	8597	6233	4084	1386	10185	10185	8148	5907	3870	1314	8914	8914	7131	5170	3387	1150	6906	6906	5525	4006	2624	891
86	30.0	Q(Btu/h)	130285	130285	97714	65143	32571	17371	120800	120800	90600	60400	30200	16107	111356	111356	83517	55678	27839	14847	97865	97865	73399	48932	24466	13049
		W	10484	10484	8387	6081	3984	1352	9773	9773	7818	5668	3714	1260	8414	8414	6731	4880	3197	1085	6487	6487	5189	3762	2465	837
82	27.8	Q(Btu/h)	130669	130669	98002	65334	32667	17422	121156	121156	90867	60578	30289	16154	111684	111684	83763	55842	27921	14891	98153	98153	73615	49076	24538	13087
		W	10222	10222	8177	5929	3884	1318	9361	9361	7488	5429	3557	1207	7914	7914	6331	4590	3007	1021	6068	6068	4854	3519	2306	783
78	25.6	Q(Btu/h)	131052	131052	98289	65526	32763	17474	121511	121511	91133	60756	30378	16201	112012	112012	84009	56006	28003	14935	98441	98441	73831	49220	24610	13125
		W	9960	9960	7968	5777	3785	1284	8948	8948	7159	5190	3400	1154	7413	7413	5931	4300	2817	956	5648	5648	4519	3276	2146	728
74	23.3	Q(Btu/h)	131436	131436	98577	65718	32859	17525	121867	121867	91400	60933	30467	16249	112339	112339	84255	56170	28085	14979	98729	98729	74047	49364	24682	13164
		W	9697	9697	7758	5624	3685	1251	8536	8536	6829	4951	3244	1101	6913	6913	5530	4010	2627	892	5229	5229	4183	3033	1987	674
70	21.1	Q(Btu/h)	131819	131819	98864	65910	32955	17576	122222	122222	91667	61111	30556	16296	112667	112667	84500	56334	28167	15022	99017	99017	74263	49508	24754	13202
		W	9435	9435	7548	5472	3585	1217	8124	8124	6499	4712	3087	1048	6413	6413	5130	3719	2437	827	4810	4810	3848	2790	1828	620
66	18.9	Q(Btu/h)	132011	132011	99008	66005	33003	17601	122400	122400	91800	61200	30600	16320	112831	112831	84623	56415	28208	15044	99161	99161	74371	49580	24790	13221
		W	9306	9306	7445	5398	3536	1200	7918	7918	6334	4592	3009	1021	6157	6157	4925	3571	2340	794	4597	4597	3678	2666	1747	593
62	16.7	Q(Btu/h)	132011	132011	99008	66005	33003	17601	122400	122400	91800	61200	30600	16320	112831	112831	84623	56415	28208	15044	99161	99161	74371	49580	24790	13221
		W	9311	9311	7449	5401	3538	1201	7918	7918	6334	4592	3009	1021	6145	6145	4916	3564	2335	793	4591	4591	3673	2663	1745	592
58	14.4	Q(Btu/h)	132011	132011	99008	66005	33003	17601	122400	122400	91800	61200	30600	16320	112831	112831	84623	56415	28208	15044	99161	99161	74371	49580	24790	13221
		W	9317	9317	7453	5404	3540	1202	7918	7918	6334	4592	3009	1021	6133	6133	4907	3557	2331	791	4585	4585	3668	2659	1742	591
54	12.2	Q(Btu/h)	132011	132011	99008	66005	33003	17601	122400	122400	91800	61200	30600	16320	112831	112831	84623	56415	28208	15044	99161	99161	74371	49580	24790	13221
		W	9322	9322	7458	5407	3542	1202	7918	7918	6334	4592	3009	1021	6121	6121	4897	3550	2326	789	4579	4579	3663	2656	1740	591
50	10.0	Q(Btu/h)	132011	132011	99008	66005	33003	17601	122400	122400	91800	61200	30600	16320	112831	112831	84623	56415	28208	15044	99161	99161	74371	49580	24790	13221
		W	9327	9327	7462	5410	3544	1203	7918	7918	6334	4592	3009	1021	6110	6110	4888	3544	2322	788	4573	4573	3658	2652	1738	590
46	7.8	Q(Btu/h)	132011	132011	99008	66005	33003	17601	122400	122400	91800	61200	30600	16320	112831	112831	84623	56415	28208	15044	99161	99161	74371	49580	24790	13221
		W	9332	9332	7466	5413	3546	1204	7918	7918	6334	4592	3009	1021	6098	6098	4878	3537	2317	786	4567	4567	3654	2649	1735	589
42	5.6	Q(Btu/h)	132011	132011	99008	66005	33003	17601	122400	122400	91800	61200	30600	16320	112831	112831	84623	56415	28208	15044	99161	99161	74371	49580	24790	13221
		W	9338	9338	7470	5416	3548	1204	7918	7918	6334	4592	3009	1021	6086	6086	4869	3530	2313	785	4561	4561	3649	2645	1733	588
38	3.3	Q(Btu/h)	132011	132011	99008	66005	33003	17601	122400	122400	91800	61200	30600	16320	112831	112831	84623	56415	28208	15044	99161	99161	74371	49580	24790	13221
		W	9343	9343	7474	5419	3550	1205	7918	7918	6334	4592	3009	1021	6074	6074	4859	3523	2308	783	4555	4555	3644	2642	1731	587
34	1.1	Q(Btu/h)	132011	132011	99008	66005	33003	17601	122400	122400	91800	61200	30600	16320	112831	112831	84623	56415	28208	15044	99161	99161	74371	49580	24790	13221
		W	9348	9348	7478	5422	3552	1206	7918	7918	6334	4592	3009	1021	6063	6063	4850	3516	2304	782	4549	4549	3639	2638	1729	587
30	-1.1	Q(Btu/h)	132011	132011	99008	66005	33003	17601	122400	122400	91800	61200	30600	16320	112831	112831	84623	56415	28208	15044	99161	99161	74371	49580	24790	13221
		W	9353	9353	7483	5425	3554	1206	7918	7918	6334	4592	3009	1021	6051	6051	4841	3509	2299	780	4543	4543	3634	2635	1726	586
26	-3.3	Q(Btu/h)	132011	132011	99008	66005	33003	17601	122400	122400	91800	61200	30600	16320	112831	112831	84623	56415	28208	15044	99161	99161	74371	49580	24790	13221
		W	9359	9359	7487	5428	3556	1207	7918	7918	6334	4592	3009	1021	6039	6039	4831	3503	2295	779	4537	4537	3630	2631	1724	585
23	-5.0	Q(Btu/h)	132011	132011	99008	66005	33003	17601	122400	122400	91800	61200	30600	16320	112831	112831	84623	56415	28208	15044	99161	99161	74371	49580	24790	13221
		W	9363	9363	7490	5430	3558	1208	7918	7918	6334	4592	3009	1021	6030	6030	4824	3498	2291	778	4532	4532	3626	2629	1722	585
18	-7.8	Q(Btu/h)	132011	132011	99008	66005	33003	17601	122400	122400	91800	61200	30600	16320	112831	112831	84623	56415	28208	15044	99161	99161	74371	49580	24790	13221
		W	9363	9363	7490	5430	3558	1208	7918	7918	6334	4592	3009	1021	6030	6030	4824	3498	2291	778	4532	4532	3626	2629	1722	585
14	-10.0	Q(Btu/h)	132192	132192	99008	66005	33003	17601	122400	122400	91800	61200	30600	16320	112831	112831	84623	56415	28208	15044	99161	99161	74371	49580	24790	13221
		W	9363	9363	7490	5430	3558	1208	7918	7918	6334	4592	3009	1021	6030	6030	4824	3498	2291	778	4532	4532	3626	2629	1722	585
10	-12.2	Q(Btu/h)	132011	132011	99008	66005	33003	17601	122400	122400	91800	61200	30600	16320	112831	112831	84623	56415	28208	15044	99161	99161	74371	49580	24790	13221
		W	9363	9363	7490	5430	3558	1208	7918	7918	6334	4592	3009	1021	6030	6030	4824	3498	2291	778	4532	4532	3626	2629	1722	585
6	-14.4	Q(Btu/h)	132011	132011	99008	66005	33003	17601	122400	122400	91800	61200	30600	16320	112831	112831	84623	56415	28208	15044	99161	99161	74371	49580	24790	13221
		W	9363	9363	7490	5430	3558	1208	7918	7918	6334	4592	3009	1021	6030	6030	4824	3498	2291	778	4532	4532	3626	2629	1722	585

MXZ-SM120TL-U1

2) Heating

Rated	
Q (Btu/h)	129000
W	9910

Indoor D.B.			79°F / 26.0°C						70°F / 21.1°C						61°F / 16.0°C					
Out-door W.B. (°F)	Out-door W.B. (°C)		Max	Rated	75%	50%	25%	Min	Max	Rated	75%	50%	25%	Min	Max	Rated	75%	50%	25%	Min
60	15.6	Q(Btu/h)	104727	104727	78546	52364	26182	10960	129000	129000	96750	64500	32250	13500	154263	154263	115698	77132	38566	16144
		W	5025	5025	4020	2915	1910	629	6783	6783	5426	3934	2577	849	5832	5832	4666	3383	2216	730
55	12.8	Q(Btu/h)	104727	104727	78546	52364	26182	10960	129000	129000	96750	64500	32250	13500	154263	154263	115698	77132	38566	16144
		W	5565	5565	4452	3228	2115	696	7554	7554	6043	4381	2870	945	6407	6407	5126	3716	2435	802
50	10.0	Q(Btu/h)	104727	104727	78546	52364	26182	10960	129000	129000	96750	64500	32250	13500	154263	154263	115698	77132	38566	16144
		W	6105	6105	4884	3541	2320	764	8324	8324	6660	4828	3163	1042	6982	6982	5586	4050	2653	874
47	8.3	Q(Btu/h)	104727	104727	78546	52364	26182	10960	129000	129000	96750	64500	32250	13500	154263	154263	115698	77132	38566	16144
		W	6487	6487	5189	3762	2465	812	9004	9004	7203	5222	3421	1127	7481	7481	5985	4339	2843	936
42	5.6	Q(Btu/h)	104727	104727	78546	52364	26182	10960	129000	129000	96750	64500	32250	13500	154263	154263	115698	77132	38566	16144
		W	7219	7219	5775	4187	2743	903	10184	10184	8147	5906	3870	1274	8439	8439	6751	4895	3207	1056
35	1.7	Q(Btu/h)	104727	104727	78546	52364	26182	10960	129000	129000	96750	64500	32250	13500	154263	154263	115698	77132	38566	16144
		W	8779	8779	7024	5092	3336	1099	12098	12098	9679	7017	4597	1514	10493	10493	8394	6086	3987	1313
32	0.0	Q(Btu/h)	104613	104613	78460	52307	26153	10948	128860	128860	96645	64430	32215	13485	154096	154096	115572	77048	38524	16126
		W	9439	9439	7552	5475	3587	1181	12469	12469	9975	7232	4738	1560	10906	10906	8724	6325	4144	1365
27	-2.8	Q(Btu/h)	104044	104044	78033	52022	26011	10888	128158	128158	96119	64079	32040	13412	153257	153257	114942	76628	38314	16038
		W	10511	10511	8409	6096	3994	1315	11589	11589	9271	6721	4404	1450	10037	10037	8029	5821	3814	1256
22	-5.6	Q(Btu/h)	103474	103474	77606	51737	25869	10829	127456	127456	95592	63728	31864	13338	152417	152417	114313	76209	38104	15951
		W	11582	11582	9266	6718	4401	1449	10708	10708	8567	6211	4069	1340	9168	9168	7334	5317	3484	1147
17	-8.3	Q(Btu/h)	102878	102878	77159	51439	25720	10766	126722	126722	95042	63361	31681	13262	151540	151540	113655	75770	37885	15859
		W	11422	11422	9138	6625	4340	1429	9714	9714	7771	5634	3691	1215	8166	8166	6533	4736	3103	1022
12	-11.1	Q(Btu/h)	94635	94635	70977	47318	23659	9904	116569	116569	87427	58285	29142	12199	139398	139398	104548	69699	34849	14588
		W	10753	10753	8602	6237	4086	1345	9048	9048	7238	5248	3438	1132	7522	7522	6017	4363	2858	941
5	-15.0	Q(Btu/h)	75975	75975	56981	37987	18994	7951	93584	93584	70188	46792	23396	9794	111911	111911	83933	55956	27978	11712
		W	10106	10106	8085	5861	3840	1265	8493	8493	6794	4926	3227	1063	7036	7036	5629	4081	2674	880
2	-16.7	Q(Btu/h)	68821	68821	51616	34410	17205	7202	84771	84771	63579	42386	21193	8871	101373	101373	76030	50687	25343	10609
		W	9664	9664	7731	5605	3672	1209	8229	8229	6583	4773	3127	1030	6929	6929	5543	4019	2633	867
-3	-19.4	Q(Btu/h)	57600	57600	43200	28800	14400	6028	70950	70950	53213	35475	17738	7425	84845	84845	63634	42422	21211	8879
		W	8927	8927	7141	5177	3392	1117	7788	7788	6231	4517	2960	975	6750	6750	5400	3915	2565	845
-8	-22.2	Q(Btu/h)	52031	52031	39023	26016	13008	5445	64090	64090	48068	32045	16023	6707	76642	76642	57481	38321	19160	8021
		W	8187	8187	6550	4748	3111	1024	7330	7330	5864	4251	2785	917	6391	6391	5113	3707	2428	800
-13	-25.0	Q(Btu/h)	47875	47875	35907	23938	11969	5010	58971	58971	44229	29486	14743	6171	70520	70520	52890	35260	17630	7380
		W	7447	7447	5957	4319	2830	932	6868	6868	5494	3983	2610	859	5986	5986	4788	3472	2275	749

⚠ Warning

■ Do not use refrigerant other than the type indicated in the manuals provided with the unit and on the nameplate.
- Doing so may cause the unit or pipes to burst, or result in explosion or fire during use, repair, or at the time of disposal of the unit.
- It may also be in violation of applicable laws.
- MITSUBISHI ELECTRIC CORPORATION cannot be held responsible for malfunctions or accidents resulting from the use of the wrong type of refrigerant.

■ Our air conditioning equipment and heat pumps contain a fluorinated greenhouse gas, R454B.

MITSUBISHI ELECTRIC CORPORATION
HEAD OFFICE: TOKYO BUILDING, 2-7-3, MARUNOUCHI, CHIYODA-KU, TOKYO 100-8310, JAPAN
www.MitsubishiElectric.com

M-P0983B

New publication effective May 2026
Specifications subject to change without notice